PROJECT MANUAL

100% CONSTRUCTION DOCUMENTS
Oct 29 th, 2025

City of McFarland Police Department
402 Mast Avenue, McFarland, California 93250

ARCHITECTURE & INTERIOR DESIGN

Dewberry Architects Inc.
1760 Creekside Oaks Dr.
Suite 280
Sacramento, CA 95833
916-239-7268

MECHANICAL, PLUMBING & FIRE PROTECTION ENGINEER

P2S.
5000 East Spring Street
Suite 800
Long Beach, CA 90815
562.496.2999

STRUCTURAL ENGINEER

Martin/ Martin Consulting Engineers
150 Bovet Rd
Suite 550
San Mateo, CA 94402
650.367.8100

CIVIL ENGINEER

KPFF Consulting Engineers
140 Newport Center Drive
Suite 100
Newport Beach, CA 92600
949.478.8800

ELECTRICAL & TECHNOLOGY ENGINEER

P2S.
5000 East Spring Street
Suite 800
Long Beach, CA 90815
562.496.2999

TABLE OF CONTENTS

PROCUREMENT AND CONTRACTING REQUIREMENTS GROUP

DIVISION 00 – PROCUREMENT AND CONTRACTING REQUIREMENTS

INTRODUCTORY INFORMATION

00 01 10 Table of Contents

SPECIFICATIONS GROUP

FACILITY CONSTRUCTION SUBGROUP

DIVISION 01 - CONCRETE

01 35 53	SECURITY PROCEDURES	3

DIVISION 03 - CONCRETE

03 10 00	CONCRETE FORMWORK	4
03 20 00	CONCRETE REINFORCEMENT	5
03 30 00	CAST-IN-PLACE CONCRETE	15
03 30 50	CONCRETE TESTING & INSPECTION	4
03 35 34	POLISHED CONCRETE FINISHING	6

DIVISION 04 - MASONRY

04 05 13	MASONRY MORTARING	4
04 05 16	MASONRY GROUTING	5
04 20 00	UNIT MASONRY	22
04 30 00	CONCRETE UNIT MASONRY	8
04 72 00	CAST STONE MASONRY	8

DIVISION 05 - METALS

05 05 53	TAMPER PROOF METAL FASTENERS	3
05 12 00	STRUCTURAL STEEL FRAMING	10
05 30 00	METAL DECKING	8
05 40 00	COLD-FORMED METRAL FRAMING	10
05 50 00	METAL FABRICATIONS	10
05 52 13	PIPE AND TUBE RAILINGS	11

DIVISION 06 - WOOD, PLASTICS, AND COMPOSITES

06 10 00	ROUGH CARPENTRY	8
06 16 00	SHEATHING	5
06 41 16	PLASTIC-LAMINATE-CLAD CABINETS & CASEWORK	7

DIVISION 07 - THERMAL AND MOISTURE PROTECTION

07 21 00	THERMAL INSULATION	5
07 27 26	FLUID-APPLIED MEMBRANE AIR BARRIERS	9
074113.17	STANDING-SEAM METAL ROOF PANELS	13

07 41 16	INSULATED METAL ROOF PANELS	12
07 42 13.13	PREFORMED METAL PANELS	6
07 42 13.19	INSULATED METAL WALL PANELS	10
07 42 13.19A	INSULATED – COMPOSITE BACKUP PANEL SYSTEM	7
07 54 19	POLYVINYL-CHLORIDE ROOFING	17
07 62 00	SHEET METAL FLASHING AND TRIM	12
07 71 00	ROOF SPECIALTIES	8
07 72 00	ROOF ACCESSORIES	17
07 92 00	JOINT SEALANTS	10
07 92 23	SECURITY JOINT SEALANT	6
07 95 00	EXPANSION CONTROL	5

DIVISION 08 - OPENINGS

08 11 13	HOLLOW METAL DOORS AND FRAMES	13
08 14 16	FLUSH WOOD DOORS	7
08 31 13	ACCESS DOORS AND FRAMES	4
08 41 13	ALUMINUM-FRAMED ENTRANCES AND STOREFRONTS	3
08 71 00	DOOR HARDWARE	25
08 80 00	GLAZING	12
08 83 00	MIRRORS	7
08 88 13	FIRE RATED GLAZING	8
08 88 53	SECURITY GLAZING	10
08 91 19	FIXED LOUVERS	6

DIVISION 09 - FINISHES

09 22 16	NON-STRUCTURAL METAL FRAMING	7
09 29 00	GYPSUM BOARD	9
09 30 00	TILING	10
09 30 13	CERAMIC TILING	10
09 50 00	WOOD PANEL CEILINGS	9
09 51 13	ACOUSTICAL PANEL CEILINGS	7
09 65 13	RESILIENT BASE AND ACCESSORIES	5
09 65 16	RESILIENT SHEET FLOORING	6
09 65 19	RESILIENT TILE AND PLANK FLOORING	5
09 65 66	RESILIENT ATHLETIC FLOORING	5
09 68 13	TILE CARPETING	6
09 72 00	WALL COVERINGS	4
09 77 23	FABRIC WRAPPED PANELS	5
09 91 13	EXTERIOR PAINTING	5
09 91 23	INTERIOR PAINTING	9
09 96 00	HIGH-PERFORMANCE COATINGS	5

DIVISION 10 - SPECIALTIES

10 14 19	DIMENSIONAL LETTER SIGNAGE	3
10 14 23.16	ROOM-IDENTIFICATION PANEL SIGNAGE	7
10 21 13.13	METAL TOILET COMPARTMENTS	6
10 26 00	WALL AND DOOR PROTECTION	4
10 28 00	TOILET, BATH, AND LAUNDRY ACCESSORIES	8

10 44 13	FIRE PROTECTION CABINETS	5
10 44 16	FIRE EXTINGUISHERS	3
10 51 13	METAL LOCKERS	4
10 51 13.13	EVIDENCE LOCKERS	7
10 56 26	MOBILE STORAGE SHELVING	6
10 75 16	GROUND-SET FLAGPOLES	5

DIVISION 11 - EQUIPMENT

11 19 00	GENERAL PROVISIONS FOR DETENTION WORK	6
11 19 13	DETENTION HOLLOW METAL DOORS & FRAMES	12
11 19 16	DETENTION ACCESS PANEL	4
11 19 23	DETENTION HARDWARE	14
11 19 26	DETENTION SLIDING DOOR LOCKING DEVICES	7
11 19 33	DETENTION GLASS & GLAZING	7
11 19 43	DETENTION FURNISHINGS & EQUIPMENT	7
11 19 46	DETENTION TOILET ACCESSORIES	5
11 19 73	DETENTION METAL CEILING ASSEMBLIES	8
11 30 13	RESIDENTIAL APPLIANCES	7

DIVISION 12 - FURNISHINGS

12 24 13	ROLLER WINDOW SHADES	6
12 35 70	STAINLESS STEEL CASEWORK	3
12 36 61.16	SOLID SURFACING	5
12 48 13	ENTRANCE FLOOR MATS AND FRAMES	4

DIVISION 13 - SPECIAL CONSTRUCTION

13 34 19	METAL BUILDING SYSTEMS	17
13 47 13	BULLET RESISTANT FIBERGLASS PANELS	3

DIVISION 21 - FIRE SUPPRESSION

21 05 17	SLEEVES FOR SEALS FOR FIRE SUPPRESSION PIPING	3
21 05 18	ESCUTCHEONS FOR FIRE SUPPRESSION PIPING	2
21 05 53	IDENTIFICATION FOR FIRE SUPPRESSION PIPING & EQUIPMENT	3
21 13 13	WET-PIPE SPRINKLER SYSTEMS	9

DIVISION 22 - PLUMBING

22 00 00	GENERAL PLUMBING REQUIREMENTS	9
22 05 00	COMMON WORK RESULTS FOR PLUMBING	10
22 05 17	SLEEVES & SLEEVE SEALS FOR PLUMBING PIPING	5
22 05 18	ESCUTCHEONS FOR PLUMBING PIPING	4
22 05 19	METERS & GAGES FOR PLUMBING PIPING	7

22 05 23	GENERAL DUTY VALVES FOR PLUMBING PIPING	14
22 05 29	HANGERS & SUPPORTS FOR PLUMBING PIPING & EQUIPMENT	14
22 05 48	VIBRATION & SEISMIC CONTROLS FOR PLUMBING PIPING & EQUIPMENT	14
22 05 53	IDENTIFICATION FOR PLUMBING PIPING & EQUIPMENT	8
22 07 19	PLUMBING PIPING INSULATION	24
22 11 16	DOMESTIC WATER PIPING & FITTINGS	14
22 11 19	DOMESTIC WATER PIPING SPECIALTIES	24
22 11 23.21	INLINE, DOMESTIC-WATER PUMPS	7
22 13 16	SANITARY WASTE & VENT PIPING	17
22 13 19	SANITARY WASTE PIPING SPECIALTIES	13
22 14 13	STORM DRAINAGE PIPING	21
22 14 23	STORM DRAINAGE PIPING SPECIALTIES	12
22 16 19	DISINFECTION OF POTABLE WATER SYSTEM	3
22 33 00	ELECTRIC, DOMESTIC-WATER HEATERS	10
22 40 00	PLUMBING FIXTURES	13
22 47 13	DRINKING FOUNTAINS	4

DIVISION 23 - HEATING, VENTILATING, & AIR CONDITIONING

23 00 00	GENERAL MECHANICAL REQUIREMENTS	8
23 05 17	SLEEVES & SLEEVE SEALS FOR HVAC PIPING	4
23 05 18	ESCUTCHEONS FOR HVAC PIPING	3
23 05 29	HANGERS & SUPPORTS FOR HVAC PIPING & EQUIPMENT	13
23 05 48	VIBRATION SEISMIC CONTROL FOR HVAC	17
23 05 53	IDENTIFICATION FOR HVAC PIPING & EQUIPMENT	8
23 05 93	TESTING, ADJUSTING & BALANCING FOR HVAC	17
23 07 13	DUCT INSULATION	12
23 07 19	HVAC PIPING INSULATION	21
23 09 00	BUILDING AUTOMATION CONTROL SYSTEM	48
23 31 13	METAL DUCTS	20
23 33 00	AIR DUCT ACCESSORIES	12
23 33 46	FLEXIBLE DUCTS	3
23 34 23	HVAC FANS	10
23 37 13	DIFFUSERS, REGISTERS & GRILLES	5
23 74 16	PACKAGED, ROOFTOP AIR CONDITIONING UNITS	13
23 81 26	SPLIT SYSTEM AIR CONDITIONERS	8

DIVISION 26 - ELECTRICAL

26 00 00	GENERAL ELECTRICAL REQUIREMENTS	9
26 05 19	LV POWER CONDUCTORS & CABLES	7
26 05 26	GROUNDING & BONDING	10
26 05 29	HANGERS & SUPPORTS	6
26 05 33	RACEWAYS & BOXES FOR ELECTRICAL SYSTEMS	15
26 05 43	UNDERGROUND DUCTS & RACEWAYS	15
26 05 44	SLEEVES & SLEEVE SEALS	5

26 05 53	IDENTIFICATION FOR ELECTRICAL SYSTEMS	12
26 05 73	SHORT CIRCUIT, COORDINATION & ARC FLASH STUDIES	10
26 09 13	ELECTRICAL POWER MONITORING & CONTROL	18
26 09 43	NETWORK LIGHTING CONTROLS	24
26 24 13	SWITCHBOARDS	18
26 24 16	PANELBOARDS	14
26 27 13	ELECTRICITY METERING	6
26 27 26	WIRING DEVICES	15
26 28 13	FUSES	4
26 28 16	ENCLOSED SWITCHES & CIRCUIT BREAKERS	9
26 32 13	ENGINE GENERATORS	24
26 36 00	TRANSFER SWITCHES	14
26 43 13	SURGE PROTECTION FOR LV ELECTRICAL POWER CIRCUITS	7
26 51 19	LED INTERIOR LIGHTING	13
26 56 19	LED EXTERIOR LIGHTING	11

DIVISION 27 - COMMUNICATIONS

27 05 00	GENERAL REQUIREMENTS FOR COMMUNICATIONS INSTALLATIONS	23
27 05 26	GROUNDING BONDING FOR COMMUNICATION SYSTEMS	10
27 05 29	HANGERS AND SUPPORTS FOR COMMUNICATIONS SYSTEMS	3
27 05 33	CONDUIT & BACKBOXES FOR COMMUNICATIONS SYSTEMS	9
27 05 36	CABLE TRAYS FOR COMMUNICATION SYSTEMS	11
27 11 16	CABINETS, RACKS & ENCLOSURES FOR COMMUNICATION SYSTEMS	11
27 11 19	TERMINATION BLOCKS & PATCH PANELS FOR COMMUNICATIONS SYSTEMS	5
27 13 13	COPPER BACKBONE CABLE FOR COMMUNICATIONS SYSTEMS	4
27 13 23	COMMUNICATIONS OPTICAL FIBER BACKBONE CABLING	3
27 15 13	COPPER HORIZONTAL CABLE FOR COMMUNICATIONS SYSTEMS	4
27 15 43	COMMUNICATIONS FACEPLATES & CONNECTORS	4
27 16 19	COMMUNICATION PATCH CORDS	4
27 41 16	INTEGRATED AUDIO-VIDEO SYSTEMS & EQUIPMENT	21

DIVISION 28 – ELECTRONIC SAFETY AND SECURITY

28 05 00	COMMON WORK RESULTS FOR ELECTRICAL SAFETY & SECURITY	21
28 13 00	PHYSICAL ACCESS CONTROL SYSTEM	9

28 23 00 VIDEO SURVEILLANCE SYSTEM 9

DIVISION 31 – EARTHWORK
31 10 00 SITE CLEARING 3
31 20 00 EARTH MOVING 9

DIVISION 32 – EXTERIOR IMPROVEMENTS
32 12 16 ASPHALT PAVING 6
32 13 13 CONCRETE PAVING 7
32 31 13 CHAIN LINK FENCES & GATES 6

DIVISION 33 – UTILITIES
33 11 00 WATER UTILITY DISTRIBUTION PIPING 9
33 31 00 SANITARY UTILITY SEWERAGE PIPING 5
33 41 00 STORM UTILITY DRAINAGE PIPING 6

END OF TABLE OF CONTENTS

SECTION 013553 – SECURITY PROCEDURES

PART 1 - GENERAL

1.1 BASIC

A. The work under this contract will be performed on the premises of a Security Facility. The Facility shall provide and maintain the security to safeguard workers during the construction. Prior to the beginning of any work, the Prime Contractors shall consult with the Superintendent of the Facility and his staff to be advised on the rules and regulations required for complete security of the Facility. Each contractor shall instruct all subordinates and subcontractors of security requirements before they begin their portions of the work.

B. The Facility may require additional security provisions to the ones listed in this section. These additional security provisions are to become part of this contract just as if they were listed herein.

1.2 EMPLOYEE IDENTIFICATION

A. The Contractor shall provide the Owner and the Facility with a complete list of all persons duly authorized to perform work on the project, and only those persons will be admitted into the Facility. All construction workers may be fingerprinted. The Facility may issue temporary identification cards, which will be kept by the security personnel at the Facility entrance. Each worker may be required to sign an in and out card upon entering or leaving the facility.

1.3 SEARCHES

A. No contraband such as liquor, controlled substances, firearms, ammunition, tobacco products, or similar items may be brought into the Facility. The State may require a worker who violates the prohibition on contraband to be removed from the site and not permitted to return. If this occurs, the State may find the Contractor to be in Breach of Contract. Prior to entering the Facility, Contractor's employees must sign a form titled "State of Indiana, Some Laws Governing Conduct in Penal Facilities."

1.4 REMOVAL OF WORKER

A. The Facility may, with cause, require the Contractor to remove any worker from the project.

1.5 VEHICLE USE

A. A designated area will be arranged for personal vehicles. All cars, trucks and other vehicles shall be locked at all times, including ignition, gasoline filler cap, trunk and all doors. All contraband shall be removed. The speed limit within the Facility is 15 miles per hour and will

be strictly enforced. Trucks shall be immediately loaded or unloaded by the Contractor and removed. Heavy-duty equipment left within the Facility at night shall be securely locked and every precaution taken to prevent it from being started.

1.6 CONTACT WITH INMATES

A. A worker shall at no time talk to, signal, whistle, or in any way attract the attention of any inmate and shall restrict his/her movements to the project area. Workers shall not come to the job under the influence of intoxicants or drugs. Nothing shall be taken from or given to an inmate. Inmates are not to help in any way. It will be the worker's responsibility to notify their superior or a Facility official of all unusual happenings pertaining to the inmates.

1.7 EMERGENCY AID

A. The Facility is not expected to furnish medical aid or treatment to workers, but in the event of an emergency, the Facility will give every possible aid.

1.8 SMOKING BAN

A. There is a total smoking ban in force at all Department of Correction facilities. This ban includes all contractor personnel. Smoking is prohibited anywhere within the bounds of the Facility. No one is permitted to have smoking materials of any type on their person at any time. Smoking materials discovered will be confiscated. Repeat offenders will be removed.

1.9 CONTRACTOR TOOL CONTROL

A. All contractor vehicles and equipment (e.g. trucks, cranes, air compressors, etc.) that will be entering the Facility on a regular basis shall have a vehicle clearance form issued by the Facility. Fuel driven vehicles and equipment shall have locked gas caps.

B. All tools or equipment on vehicles will have a prepared inventory list that will be left at a designated gate to verify that all tools are accounted for when leaving.

C. While in the Facility, tools will always be locked in gang boxes and secured when not in use. Workers must report to the security staff immediately if any tools or equipment are missing.

1.10 TOOLS

A. With approval of the Facility, each Contractor may move on site a trailer for a temporary office or tool storage. All tools taken in shall be listed in a manifest with copies provided to the Facility. All tools will be accounted for at the close of each day. All changes to the tool inventory shall be updated on the Facility manifest. All broken tools shall be reported and all pieces accounted for. The tool shed provided by each Contractor shall be securely locked.

B. All Class “A” tools shall be secured in locked gang boxes or secure construction trailers. Class

"A" tools are considered a threat to facility security. The following is a representative list of tools classified as Class “A” by the Department of Correction:

1. Abrasive grinding wheels.
2. Axes and hatchets.
3. Crow bars.
4. Pinch bars (over 12 inches in length).
5. Bolt cutters, cables and chains.
6. Metal cutting chisels.
7. “C” clamps (8 inches and over).
8. Files and rasps.
9. Portable grinders.
10. Air and electric hammers.
11. Sledge hammers or other hammers over 4 pounds.
12. Portable block and tackle, come along, etc.
13. Ice picks.
14. Portable jacks.
15. Ladders (10 feet and over).
16. All extension ladders.
17. Pipe and tube cutters.
18. Gear wheel pullers.
19. Ropes.
20. Metal cutting saw blades.
21. Shears and scissors (8 inches blades and over).
22. Tin snips (8 inches overall length and over).
23. Cutting torch heads.
24. Portable braces.
25. Wrenches (over 18 inches in length).
26. Security fastener tools.
27. All knives.

C. “Powder activated” tools using gunpowder charges will be allowed on the construction site at the discretion of the Superintendent of the Facility. These tools are considered a security-threatening tool and very close supervision of both the tool and the charges is required. Such tools and charges shall be maintained on the site only when the use is necessary for that particular time period.

D. Any class “A” tools found unsecured or unsupervised may be impounded and held in the Superintendent's office until such time as the Job Site Superintendent meets with the Superintendent of the Facility or his designated staff to retrieve such items.

END OF SECTION 013553

SECTION 03 10 00 - CONCRETE FORMWORK

PART 1 GENERAL

1.1 SUMMARY

A. Section Includes
1. Formwork for cast-in-place concrete, with shoring, bracing, and anchorage.
2. Openings for other work.
3. Form accessories.
4. Form stripping.

B. Related Documents and Sections
1. Section 032000 - Concrete Reinforcement.
2. Section 033000 - Cast-In-Place Concrete.

1.2 QUALITY ASSURANCE

A. Formwork shall be in conformance with ACI 347, "Guide for Formwork for Concrete," unless otherwise specified.

1.3 DELIVERY, STORAGE AND HANDLING

A. Store products subject to damage by dirt and moisture in a clean, dry location, off the ground and suitably protected.

1.4 COORDINATION

A. Coordinate the design, construction and installation of concrete formwork with the requirements for openings, sleeves, chases, reglets, pipes, recesses, nailers, anchors, ties, inserts and other embedded items.

PART 2 PRODUCTS

2.1 MATERIALS

A. Form materials shall be new and undamaged at start of work.

B. Use flexible spring-steel forms or laminated boards to form radius bends.

C. Form Lumber: Douglas Fir, Construction Grade, No. 2 or better, S1S2E.

D. Plywood: 5-ply, 3/4 in. thick, APA B-B Plyform, Class I, Exterior Type with mill-oiling treatment omitted.

2.2 EARTH FORMS

A. Where approved, vertical excavated surfaces may be used for forms for slabs on grade and grade beams, provided that the earth will stand without caving and that suitable provisions

are taken to prevent raveling of top edges or sloughing of loose materials from the walls of the excavation. Footings must be increased 2 in. in width from that shown on plans.

B. Where earth forms are permitted, clear dimensions as indicated shall be maintained and any over-excavation shall be filled monolithically with concrete.

C. Construct wood edge strips at top sides of excavations.

2.3 FORM ACCESSORIES

A. Accessories which will be wholly or partially embedded in concrete, such as ties and hangers, shall be a commercially manufactured type, of metal; wire will not be acceptable.

B. The portion remaining in the concrete shall leave no metal within one inch of concrete face and no fractures, spalls, depressions, or other surface disfigurations greater that 3/4 in. in diameter.

C. Spreader cones on ties shall not exceed 1 in. in diameter.

2.4 FORM SEALER

A. Manufacturers
1. Sonneborn Building Products, Inc., "Form Saver".
2. Grace Construction Materials "Form Fill".
3. Burke "Form Sealer".

B. Type: Shall eliminate grain raise as a result of moisture and shall not interfere with color, bond, or subsequent treatment of concrete surface.

2.5 FORM-RELEASE AGENTS

A. For Exposed Concrete to Receive Paint or Other Coatings: Chemically active type producing water-insoluble soaps meeting ASTM C-309. Release agents shall contain no petroleum solvents such as creosote, paraffin, wax or diesel oils.

B. For Unexposed Concrete: Any type meeting ASTM C-309 that will not interfere with bond of applied finishes.

PART 3 EXECUTION

3.1 FORMWORK

A. All concrete placement shall be contained by constructed forms or stable earth forms.

B. Design, construct, and brace formwork and temporary falsework to safely support concrete and safely hold personnel during construction operations.

C. Construct forms of sufficient strength and rigidity to produce finished concrete of the precise size, shape, and location indicated, within the specified tolerances. Form assembly

shall permit removal in proper sequence without damage to concrete. Reinforce frames and blockouts from movement and deformation.

D. Arrange forms to permit single placement of exposed areas and panels without joints between adjacent forming materials in the same plane.

E. Construct forms no higher than 12 in. above the top of a placement or construction joint.

F. Construction Joints
   1. Form in accordance with requirements of Section 03 30 00.
   2. Provide a surfaced strip where construction joints intersect exposed surfaces; faces to provide straight lines at joints. Prior to subsequent placement, remove strip and tighten forms.
   3. Construction joints shall show no overlapping or offsetting of concrete surfaces and shall, as closely as possible, present the same appearance as butted plywood joints.
   4. Joints in a continuous line shall be straight and true.

G. Provide cleanouts as required to permit inspection and thorough cleaning of loose dirt, debris, and waste material. Cleanouts shall not be apparent on concrete surfaces exposed to view in the finished Work.

H. Chamfered Corners
   1. Chamfer exposed corners unless otherwise indicated.
   2. Obtain chamfers by placing 3/4 in. x 3/4 in. non-staining moldings in forms. Provide pieces in longest lengths possible and miter joints.

I. Whenever concrete bases or foundations are to be provided for equipment furnished as part of the Work of other Sections, verify dimensions for the equipment to be furnished before concrete is placed.

J. Form surfaces for concrete exposed to view in the finished Work shall be constructed of plywood.

K. For surfaces not exposed to view in the finished Work, forms shall be lumber, form plywood, or any other suitable material.

L. Formwork shall be clean and free of debris when concrete is placed.

M. Forms shall be sufficiently tight to prevent leakage of water and mortar.

N. Subject to approval of the Owner's Representative, undamaged wood formwork may be reused maximum 6 times. Use of metal forms is unlimited.

3.2 TOLERANCES

A. Construct formwork to tolerances specified in ACI 347, except that anchor bolt setting tolerances shall be $\pm$1/8 in. within a given group, such as steel connections or equipment bases, and within groups in relation to other groups, such as column centers.

B. The tolerance for column centers shall not be cumulative, so that the actual overall dimension of a series of columns, for example, building bays shall still be within ±1/8 in. of the overall dimension indicated.

C. Where tighter tolerances are required to accommodate detention equipment or other items specified in other sections, construct formwork to the most restrictive tolerance.

3.3 PREPARATION OF FORMS

A. Treat contact surface of plywood and lumber forms with a form sealer in accordance with the manufacturer's printed instructions.

B. Clean surfaces and reseal before each use to ensure undamaged concrete.

C. Do not use form oil.

3.4 STRIPPING OF FORMS

A. Strip forms using methods which will not damage concrete.

B. Do not remove forms until concrete has attained sufficient strength to support its own weight and construction live loads to be placed thereon without damage to the structure, but not before minimum time as follows:
   1. Footings, Curbs, Walks, and Paving: Side forms may be removed 24 hours after concrete is placed.
   2. Side Forms of Slabs: 10 days.
   3. Shoring: 21 days.

3.5 RESHORING

A. Submit reshoring plan to Architect/Engineer if forms are to be stripped earlier than specified above.

END OF SECTION 031000

SECTION 03 20 00 - CONCRETE REINFORCEMENT

PART 1 GENERAL

1.1 SUMMARY

A. Section Includes
   1. Reinforcing steel bars, wire fabric, and accessories for concrete and unit masonry.

B. Related Sections
   1. Section 031000 - Concrete Formwork.
   2. Section 033000 - Cast-in-Place Concrete.
   3. Section 033050 - Concrete Testing and Inspection.

1.2 REFERENCES

A. ACI 301 - Structural Concrete for Buildings.

B. ACI 315 - Details and Detailing of Reinforced Concrete.

C. ACI 318 - Building Code Requirements For Reinforced Concrete.

D. ANSI/ASTM A 82 - Cold Drawn Steel Wire for Concrete Reinforcement.

E. ANSI/ASTM A 185 - Welded Steel Wire Fabric for Concrete Reinforcement.

F. ANSI/AWS D1.4 - Structural Welding Code for Reinforcing Steel.

G. ASTM A 615 - Deformed and Plain Billet Steel Bars for Concrete Reinforcement.

H. ASTM A 706 - Low-Alloy Steel Deformed Bars for Concrete Reinforcement.

I. AWS D1.4 – Structural Welding Code – Reinforcing Steel.

J. CBC - California Building Code, 2022 Edition.

1.3 SUBMITTALS

A. Submit under provisions of Division 1.

B. Shop Drawings: Indicate bending and placing details of reinforcement; bar sizes, spacings, locations, and quantities of reinforcing steel, and wire fabric; bending and cutting schedules; supporting and spacing devices, splice locations.

C. Certificates: Welding certificates of welders in conformance with AWS D1.4.

D. Manufacturer's Certificate: Certify that products meet or exceed specified requirements.

E. Submit manufacturers' installation instructions.

F. Submit certified copies of mill test report of reinforcement materials analysis.

1.4 QUALITY ASSURANCE

A. Detailing, fabricating, and spacing of reinforcement shall be in conformance with ACI 315 and ACI 318, unless otherwise indicated.

B. Tests: Under provisions of Division 1.

C. Weld reinforcement in accordance with AWS D1.4. Do not weld reinforcement unless specifically indicated or directed by Architect or Engineer.

D. Perform Work in accordance with ACI 301.

E. Owner's Representative will inspect reinforcement.

1.5 DELIVERY, STORAGE, AND HANDLING

A. Deliver reinforcing steel from the mill in securely tied bundles, each bundle limited to one size and grade of material. Plastic or metal tags in an exposed position on each bundle shall identify the mill, the melt or heat number, and the grade and size of material.

B. After fabrication, bundle and tag reinforcing steel for identification at the site. Tags shall identify the steel by the reinforcement item marking indicated on the reviewed Shop Drawings and the quantity of such item contained in the bundle.

C. Segregate to maintain identification after bundles are broken.

D. Store off the ground, protected from the elements and contaminants which could adversely affect bond.

1.6 COORDINATION

A. Coordinate with placement of formwork, formed openings and other Work.

PART 2 PRODUCTS

2.1 REINFORCEMENT

A. Reinforcing Bars
   1. Welded Bars: ASTM A 706, Grade 60 deformed low alloy steel bars, plain finish.
   2. All Others:
      a. #4 or Larger: ASTM A 615, Grade 60 deformed billet steel bars, plain finish unless otherwise indicated.
      b. #3 Bars ASTM A 615 Grade 40 deformed low alloy steel bars plain.

B. Welded Wire Fabric: ASTM A 185 Plain Type. Provide in flat mats, rolls are not acceptable.

2.2 ACCESSORY MATERIALS

A. Wire for Ties, Stirrups, and Spiral Reinforcement: ASTM A 82, minimum 16 gage.

B. Chairs, Bolsters, Spacers, Bar Supports, and Other Accessories
   1. Conform to requirements of ACI 315; size and shape for strength and support of reinforcement during concrete placement conditions.
   2. Where portion of accessories will be within 1/2 in. of concrete surfaces exposed to the weather in the finished Work, such accessories shall be made of stainless steel.
   3. Use wire bar type support complying with CRSI recommendations, unless otherwise indicated.
   4. For slabs on grade, use supports with sand plates or horizontal runners where base materials will not support chair legs.
   5. For exposed-to-view concrete surfaces, where legs of supports are in contact with forms, provide supports with legs which are hot-dip galvanized, plastic coated or stainless steel protected.
   6. Over vapor barriers, use load-bearing bottom pads or precast concrete chairs to prevent penetration of the membrane.

C. Welding Filler Metal: E90XX for A 706, Grade 60 bars, low hydrogen electrodes.

2.3 FABRICATION

A. Fabrication of reinforcement items shall proceed only after review of bar lists and Shop Drawings. Each unit of reinforcement shall be fabricated to conform to the reviewed bar lists and shop drawings.

B. Reinforcing steel shall be bent cold and shall not be straightened or rebent in a manner that will damage the material.

C. Fabricate concrete reinforcing in accordance with ACI 318 and California Building Code.

D. Locate reinforcing splices, not indicated on Drawings, at point of minimum stress as approved.

PART 3 EXECUTION

3.1 PLACEMENT

A. At time of concrete placement, reinforcement shall be free of coatings that could adversely affect the bond with concrete.

B. Reinforcement shall be supported and fastened together to prevent displacement by construction loads or by the placement of concrete, beyond the tolerances specified in ACI 301. Sizes and dimensions of supports shall be as required to position the steel as indicated on the reviewed Shop Drawings and in conformance with the minimum concrete protective covering requirements of ACI 301.

C. Furnish reinforcing bars full length, to the extent practicable. Splices will be permitted only where indicated on the Drawings, Shop Drawings or as otherwise permitted by the Owner' Representative.

D. Lap welded wire fabric reinforcement 12 in. at edges, unless otherwise indicated, and wire together.

E. Sleeved Splices: Install splice sleeves only where indicated in accordance with manufacturer's instructions.

F. Other Splices in Reinforcement: Lapped ends of bars may be placed in contact and securely wired or may be separated sufficiently to permit the embedment of the entire surface of each bar in concrete.
   1. Stagger splices in adjacent bars.
   2. Lap bars 40 diameters unless otherwise indicated.

G. Reinforcing bars shall not be rebent or straightened; remove and replace.

H. Obstructions: Should conduit, pipes, inserts, sleeves, or other items interfere with the placement of reinforcement, notify the Owner's Representative and obtain approval of procedure before placement of concrete is started.

I. Concrete Cover: Indicated on Drawings.

J. Welding
   1. Conform to the requirements of AWS D1.4; perform by AWS-qualified welders.
   2. Perform field test on minimum one weld within each 25 welds. Conduct non-destructive field test (radiographic for butt welds, magnetic particle for fillet welds) for welds indicated.

K. Place, support and secure reinforcement against displacement. Do not deviate from required position.

L. Misplaced Reinforcing
   1. If reinforcing bars are found to be misplaced after concrete has been placed, immediately notify the Owner's Representative and make no correction and cutting without Owner's Representative review and recommendations.
   2. Misplaced bars shall not be bent.
   3. Perform redesign alterations, corrections, or replacement of concrete or reinforcing required because of misplaced bars.

M. Do not displace or damage vapor barrier.

N. Accommodate placement of formed openings.

3.2 MAINTENANCE OF REINFORCING

A. Continuously inspect and maintain reinforcement in proper position during concrete operations.

END OF SECTION 032000

SECTION 03 30 00 - CAST-IN-PLACE CONCRETE

PART 1 GENERAL

1.1 SUMMARY

A. Section Includes
1. Structural concrete for building and structure elements, concrete floors (supported and unsupported) exterior concrete flatwork.
2. Expansion and contraction joint devices associated with concrete work.
3. Equipment pads and other items indicated.
4. Installation of inserts, anchorages and other embedded items.

B. Related Sections
1. Section 031000 - Concrete Formwork: Formwork and accessories.
2. Section 032000 - Concrete Reinforcement.
3. Section 033050 - Concrete Testing and Inspection.
4. Section 079200 - Joint Sealants.
5. Division 15: Mechanical items for casting into concrete.
6. Division 16: Electrical items for casting into concrete.

1.2 REFERENCES

A. ACI 301 - Structural Concrete for Buildings.

B. ACI 305R - Hot Weather Concreting.

C. ACI 306R - Cold Weather Concreting.

D. ANSI/ASTM D 1751 - Preformed Expansion Joint Fillers for Concrete Paving and Structural Construction (Non-extruding and Resilient Bituminous Types).

E. ANSI/ASTM D 1752 - Preformed Sponge Rubber and Cork Expansion Joint Fillers for Concrete Paving and Structural Construction.

F. ASTM C 33 - Concrete Aggregates.

G. ASTM C 330 - Lightweight Concrete Aggregates.

H. ASTM C 94 - Ready-Mixed Concrete.

I. ASTM C 150 - Portland Cement.

J. ASTM C 171 - Sheet Materials for Curing Concrete.

K. ASTM C 260 - Air Entraining Admixtures for Concrete.

L. ASTM C 309 - Liquid Membrane-Forming Compounds for Curing Concrete.

M. ASTM C 494 - Chemicals Admixtures for Concrete.

N. CBC – California Building Code, 2022 Edition.

1.3 DEFINITIONS

A. Defective Concrete: Concrete not conforming to required lines, details, dimensions, tolerances or specified requirements.

1.4 SUBMITTALS

A. Submit under provisions of Division 1.

B. Product Data: Provide data on products and materials specified.

C. Shop Drawings: Indicate locations of proposed construction and control joints, prior to placement.

D. Samples: Submit two 6 in. long samples of expansion/contraction joint and control joint.

E. Certificates of Compliance: Prior to incorporation in construction, submit manufacturer's Certificate that specific products proposed for use meet or exceed specified requirements.

F. Mix Designs.

G. Manufacturer's Installation Instructions: Indicate installation procedures and interface required with adjacent Work.

H. Certificate of Installation for Concrete Hardeners: Submit manufacturer's certificate stating that concrete hardener has been applied in accordance with the manufacturer's instructions. The contractor shall sign the certificate.

1.5 QUALITY ASSURANCE

A. Conform to CBC California Building Code 2022 Edition.

B. Perform Work in accordance with ACI 301. Maintain one copy of document on site.

C. Acquire cement and aggregate from same source, respectively, for all work.

D. Conform to ACI 305R when concreting during hot weather.

E. Conform to ACI 306R when concreting during cold weather.

F. Allowable Tolerances: Deviation from plumb or level shall not exceed 1/8 in. within 10 ft. in any direction, as determined with a 10 ft. straight edge.

1.6 PRODUCT DELIVERY, STORAGE, AND HANDLING

A. Deliver, store and handle packaged materials in the manufacturer's original, sealed containers, each clearly identified with the manufacturer's name, and name and type of product.

B. Store materials subject to damage by dirt and moisture in a clean, dry location, off the ground and suitably protected.

C. Store coarse and fine aggregates in separate, covered bins.

D. Store bulk cement in covered bins.

1.7 JOB CONDITIONS

A. Environmental Requirements for Placing Concrete
   1. Hot Weather: ACI 305R. See execution below.
   2. Cold Weather: ACI 306R. See execution below.
   3. Do not place concrete during precipitation, unless adequate protection is provided.
   4. All concrete subjected to freeze-thaw cycles shall be designed as air-entrained per ASTM C 260 and ACI 201.2R.

1.8 COORDINATION

A. Coordinate work under provisions of Division 1.

B. Coordinate the placement of joint devices with erection of concrete formwork and placement of form accessories.

C. Coordinate the installation of items to be embedded in concrete and provide openings in the concrete necessary for performance of the Work of other Sections.

D. In advance of concrete placements, determine finish characteristics required by the Work of other Sections and provide concrete surfaces accordingly.

E. Concrete which is to receive application of other Work shall be water-cured only, and maintained free from other formwork and curing materials, unless otherwise accepted by the Owner’s Representative.

1.9 FIELD SAMPLES

A. Provide under provisions of Division 1.

B. Construct and erect a field sample for architectural concrete surfaces receiving special treatment or finish as result of formwork.

C. Sample Panel: Sufficient size to indicate special treatment or finish required.

D. Locate where directed.

E. Approved sample panel is considered basis of quality for the finished work. Keep sample panel exposed to view for duration of concrete work.

F. Approved sample may remain as part of the Work.

PART 2 PRODUCTS

2.1 MATERIALS

A. Concrete: Ready-mixed, ASTM C 94.

B. Cement: ASTM C 150, Type I, Type II, or Type V.

C. Aggregate: ASTM C 33.

D. Lightweight Aggregate: Expanded shale aggregate conforming to ASTM C330.

E. Water: Potable, clean, not detrimental to concrete, containing less than 500 ppm of chlorides.

2.2 ADMIXTURES

A. Water-Reducing Admixture: ASTM C 494.
   1. Manufacturers
      a. Euclid Chemical Company, Eucon WR-75.
      b. Master Builders, Pozzolith 220N.
      c. Sika Chemical Corp., Plastocrete 160.

B. Water-Reducing, Retarding Admixture: ASTM C 494.
   1. Manufacturers
      a. Euclid Chemical Company, Eucon Retarder-75.
      b. Master Builders, Pozzolith 100XR.
      c. Sika Chemical Corp., Plastiment.

C. High Range Water-Reducing Admixture (Superplasticizer): ASTM C 494.
   1. Manufacturers
      a. Euclid Chemical Company, Eucon 37.
      b. American Admixtures, Melment L10A.

D. Air-Entraining Admixture: ASTM C 260.
   1. Manufacturer: Approved by Owner's Representative.

F. Accelerator: ASTM C 494, Type C or E; Non-corrosive, non-chloride.
   1. Manufacturer
      a. Euclid Chemical Company, Accelguard 80.
      b. Master Builders, Incorporated; Pozzutec 20.
      c. W.R. Grace Company; Daraset.
   2. Submit test report from independent testing laboratory of results of an acceptable accelerated corrosion test method such as that using electrical potential measures, of minimum 1 year duration, demonstrating non-corrosive nature of product.

G. Bonding Admixture: Acrylic latex, non-rewettable type.
   1. Manufacturer
      a. Euclid Chemical Company, Flex-Con.
      b. The Burke Company, Burke Acrylic Bondcrete.
      c. Thoro System Products, Acryl 60.
      d. W. R. Grace, Daraweld C.

H. Fly Ash: Fly ash addition to the concrete mix with reduction of Portland cement is acceptable, subject to the following criteria:
   1. Fly ash shall conform to the requirements to the ASTM C 618, Class F, supplementary optional chemical and physical requirements of Tables 1A and 2A, except that the maximum sulfur trioxide shall be 4% and the maximum loss on ignition shall be 1.5%.
   2. Fly ash may be used only in concrete mixes with Portland cement Type II and IIA and shall not be used with high early strength Portland cement Type III.
   3. The reduction of Portland cement, by weight, shall not exceed 12% when comparing the mix design without fly ash with the mix design with fly ash. For comparing the mix design, the Contractor shall furnish a certified mix design without fly ash together with a mix design with fly ash. In addition, the Contractor shall submit test results on three test cylinders for each test; age, prepared and cured in accordance with ASTM C 192, test at 7 and 28 days in accordance with ASTM C 39. The test cylinders shall have been prepared from a batch of the proposed design mix with fly ash. Where the 28-day test do not meet the specified strength requirements, the design mix will not be acceptable.
   4. The amount of fly ash, by weight, added to the mix shall not be less than the reduction of Portland cement determined as specified in the proceeding subparagraph (3).

2.3 ACCESSORIES

A. Curing Compound: Liquid membrane, ASTM C 309, type I; conforming to volatile organic compound (VOC) limits established by Local Air Quality Control Board (LAQCB) District Regulations.

B. Sheet Curing Material: ASTM C 171.

C. Hardener: Clear, non-metallic dust-on type.
   1. Manufacturer
      a. Sonneborn, "Harcol Standard Natural".
      b. Burke Floor Hardener.
      c. Lambert Corp., "Colorhard".

D. Bonding Agent
   1. Manufacturer
      a. Euclid Chemical Company; Euco-Weld.
      b. Larsen Products Corp.; Weld-Crete.
      c. Symons Corporation; Ready Bond.
   5. Type: Polyvinyl acetate, rewettable type, with visible tinted pigment to verify coverage.

E. Bond Breaker
   1. Nonstaining type, providing a positive bond prevention.
   2. Manufacturer and Product
      a. Williams Distributors, Inc., Seattle WA, Williams Tilt-Up Compound.
      b. SCA Construction Supply Division, Superior Concrete Accessories, Franklin Park, IL Silcoaseal 77.
      c. Burke Co., San Mateo, CA Burke Clean Lift Bond Breaker or Burke Tilt Free Bond Breaker.

F. Structural Epoxy Bonding Adhesive: 2-component, 100% solids compound suitable for use on dry or damp surfaces.
   1. Manufacturer
      a. Euclid Chemical Company; Eucopoxy LPL, Euco 452MV.
      b. Sika Chemical Corporation; Sikadur 32 Hi-Mod.
      c. The Burke Company; Burkepoxy MV.

G. Non-Shrink Grout
   1. Manufacturer
      a. Euclid Chemical Company; Euco N-S Grout, Euco Hi-Flow Grout.
      b. Master Builders; Masterflow 713, Masterflow 928.
      c. The Burke Company; Burke Non-ferrous Non-shrink Grout.
      d. W.R. Meadows "Sealtight 588"
   2. Type: CRD C621; non-metallic; capable of achieving a 95% bearing under a 4 x 4 ft. baseplate when grout is placed at a fluid consistency.

I. Patching Mortar: Epoxy type, 100% solids, suitable for use on damp or dry surfaces.
   1. Manufacturer
      a. Euclid Chemical Company; Euco 456 Mortar.
      b. Sika Chemical Corporation; Sikadur 43 Patch-Pak.
      c. The Burke Company; Burkepoxy Mortar.

J. Patching Compound: Free flowing, polymer modified, cementitious topping.
   1. Manufacturers
      a. Vertical or Overhead Applications
         1) Euclid Chemical Company; Verticoat.
         2) Sika Corporation; SikaRepair 223.
         3) Burke Company; Skimcrete.
      b. Other Applications
         1) Euclid Chemical Company; Euco Thin Coat.
         2) Sika Chemical Corporation; Sikatop 121.
         3) Burke Company; Burke-Krete.

K. Evaporation Retardant
   1. Manufacturers
      a. Euclid Chemical Company; Eucobar.
      b. Master Builders; Confilm.
      c. The Burke Company; Burke Finishing Aid Concentrate.

2.4 JOINT DEVICES AND FILLER MATERIALS

A. Joint Filler Type A: ASTM D 1751; Asphalt impregnated fiberboard or felt, 1/4 in. thick; tongue and groove profile.

B. Joint Filler Type B: ASTM D 1752; Closed cell polyvinyl chloride foam, resiliency recovery of 90% if not compressed more than 50% of original thickness.

C. Joint Filler Type C: ASTM D 1752; Premolded sponge rubber, fully compressible with recovery rate of minimum 95%.

D. Epoxy Joint Filler: 2-component, 100% solids compound; minimum 50 shore D hardness.
   1. Manufacturer
      a. Euclid Chemical Company; Euco 700.
      b. Metzger/McGuire Co.; MM-80.
      c. The Burke Company; Burkepoxy Reflex Joint Filler.

E. Construction Joint Devices: Integral galvanized steel formed to tongue and groove profile, with removable top strip exposing sealant trough where indicated.

2.5 MIXES

A. General Requirements
   1. Design mixes shall be in accordance with CBC 1905.3. trial batch.
   2. Instruct Testing Agency to base mix designs on use of materials tested and approved.
   3. Concrete mixes shall be designed to meet strengths specified and be of uniform density without segregation when placed.
   4. Water-cement ratio which shall control the amount of total water added to concrete for the following conditions:

Concrete Aggregate Size	With Superplasticizer W/C Ratio	Without Superplasticizer W/C Ratio
1 in.	0.385	0.45
3/4 in.	0.375	0.44

   5. Air Content: 4 - 6%.
   6. Water Reducers: Use water-reducing admixtures in all concrete.
   7. Mix designs are subject to review. Final acceptance of materials will depend upon strength testing after placement.
   8. Specifically Prohibited Admixtures
      a. Admixtures containing hydrogen chloride, calcium chloride, or thiocyanates.
      b. Admixtures containing more than 0.05% chloride ions.
   9. Unspecified admixtures will not be permitted, unless modified by the Testing Agency as necessary, and each such modification is approved by the Engineer of Record.
   10. Concrete may be designed for either pump or conventional placement. If pumping will be used, the mix shall be specifically designed for pumping and shall be so designated.

B. Nonshrink Grout: Mix in accordance with the manufacturer's printed instructions, using potable water from a domestic source.

C. Dry Pack: Mix, in proportions by volume, 1 part cement to 2-1/2 parts fine aggregate, screening out materials retained on a No. 4 sieve. Mix with water to a consistency such that, when a ball of mixture is compressed in the hand, it will maintain its shape, showing finger marks, but not showing any surface water.

D. Patching Mortar: Mix in proportions, by volume, of 1 part cement to 2 parts fine aggregate.

2.6 MIXING

A. Batch Plant Conditions
1. Equipment and plant shall be capable of weighing, proper segregation and efficient handling, and shall be subject to approval. Equipment and plant processes not approved shall not be used in the Work.
2. Use approved automatic metering capable of determining moisture content of sand.

B. General Requirements
1. Concrete mixing shall comply with CBC Section 1905.8 and ASTM C 94.
2. Mix cement, fine and coarse aggregates, admixtures, and water to exact proportions of mix designs.
3. Measure fine and coarse aggregates separately according to approved method which provides accurate control and easy checking.
4. Adjust grading to improve workability; do not add water, unless otherwise recommended by the Owner's Representative.
5. Maintain proportions, values, and factors or prove mixes throughout Work.

C. Admixtures: Use automatic metering dispenser to introduce admixture into mix.

2.7 CONCRETE CLASSES

A. See schedule at the end of this Section.

2.8 STEEL REINFORCING AND EMBEDS

A. Steel reinforcing and accessories are specified in Section 03 20 00.

B. Inserts, anchorages, and other embedded items are specified in Section 05 50 00.

2.9 VAPOR BARRIER

A. Polyethylene, 20 mil. minimum.

B. Provide vapor barriers under slabs only.

C. Vapor barriers shall be placed on top of a 2" min. clean sand layer over prepared subgrade. A 2" min. protective layer of clean sand shall be placed over the vapor barrier prior to concrete placement.

PART 3 EXECUTION

3.1 EXAMINATION

A. Verify that conditions are satisfactory for the installation of cast-in-place concrete.

B. Verify requirements for concrete cover over reinforcement.

C. Verify that anchors, seats, plates, reinforcement and other items to be cast into concrete are accurately placed, positioned securely, and will not cause hardship in placing concrete.

D. If unsatisfactory conditions exist, do not commence the installation until such conditions have been corrected. Beginning installation means acceptance of existing conditions.

E. Hot Weather:
1. Follow all requirements as per ACI 305R-89; except as modified below in this Section.
2. The concrete temperature at placement shall not exceed 100 deg. F.
3. Use ice and/or cold water as part of the mixing water to reduce concrete temperature. Adjust the mix accordingly to take in account the ice. Where maximum quantities of ice and/or cold mixing water are required, aggregates should be properly drained to minimize free moisture.
4. Flatwork surfaces shall be water cured in forms and covered with burlap and plastic sheeting for protection. Forms and burlap shall be wetted down a minimum of 7 times daily to keep it continually moist.
5. Water cure all flatwork surfaces until minimum design strength is reached but not sooner than 5 days.
6. Submit a list which outlines concrete placement and curing.

F. Cold Weather Concrete.
1. Follow the requirements of ACI 306R-2 except as modified below.
2. Concrete temperature at placement and curing shall not fall below 55 deg. F for sections less than 12 in. in dimension and 50 deg. F for all others.
3. Placement temperatures may not be higher than 20 deg. F over the minimum temperatures shown above.
4. For concrete protection provide foam insulating blankets until concrete has obtained its minimum design strength, but not less than 3 days.
5. Where additional heat is required to maintain minimum concrete temperatures as listed above, heat shall be provided with electric heating wires embedded in insulating blankets.
6. Apply approved curing compound immediately after finish of newly placed concrete is complete.
7. Insure maximum temperature drop of concrete after initial protection does not exceed 45 deg. F in its first 24 hours.
8. Concrete shall not be placed against frozen subgrade or forms.
9. Submit list which outlines concrete placement and curing procedures.

3.2 PREPARATION

A. Prepare previously placed concrete by cleaning with steel brush and applying bonding agent in accordance with manufacturer's instructions.

B. Remove loose dirt and foreign matter from excavations and forms; remove standing water and saturated soil from excavations and from cavities. Placing concrete in standing water shall not be permitted.

C. Thoroughly clean reinforcement and other embedded items free from loose rust and other objectionable matter.

D. Thoroughly wet wood forms, except coated plywood, and adjacent concrete at least 1 hour in advance of placing concrete; securely close cleanout end inspection ports; repeat wetting as necessary to keep forms damp.

E. Moisten subgrade or sand associated with under-slab vapor barrier system one day prior to placing concrete; maintain moist until concrete placement.

F. Maintain equipment clean and of sufficient quantity and capacity to efficiently execute the Work.

G. Verify that subgrade and forms have been checked for line and grade, and work areas have been observed and approved by the Owner's Representative.

3.3 PLACEMENT

A. Notify the Owner's Representative 48 hours before each concrete placement.

B. Transporting
1. Concrete shall be handled from the mixer to the place of final deposit as rapidly as practicable by methods which prevent the separation or loss of the ingredients.
2. Concrete shall not be dropped freely where reinforcing bars will cause segregation, nor shall it be dropped more than 4 ft.
3. Spouts, elephant trunks, or other approved means shall be used to prevent segregation.
4. Concrete may be pumped from the transit mixer to places of deposit, provided that information on mix-design adjustments, equipment data, procedures, and the entire operation are submitted for the Owner's Representative's prior review.
   a. Pumps shall be suitable for the mix, aggregate size, and slump required.
   b. Pump operators shall be experienced in the operation of the equipment to be used.
5. Use of aluminum equipment to transport concrete is not permitted.

C. Depositing
1. Place concrete in accordance with CBC, Section 1905.10.
2. Maintain during placement or until the completion of the section, a plastic surface approximately horizontal.
3. Prevent displacement of reinforcement, anchor bolts, welding plates, and other items required to be embedded in concrete.
4. Before concrete sets, completely remove concrete spilled on forms or reinforcing steel in portions of structure not to be immediately concreted.
5. Place concrete continuously between predetermined expansion, control, and construction joints. An interruption in placing of more than 60 minutes will be cause

for shutting down concrete placement operations and the wasting of remaining mixed concrete, concrete in hoppers, and concrete in mixers. In case such interruption occurs, provide construction joints where and as directed, and cut concrete back to such line, cleaning forms and reinforcing as specified herein.

6. Keep a record of the time and data of placing the concrete in each portion of the structure. Keep reports until the completion of the structure, and keep reports open to the review of the Owner's Representative.

D. Consolidation
1. Thoroughly consolidate concrete by puddling with suitable tools during placement and thoroughly working around reinforcement, embedded fixtures, and into the corners of forms.
2. In addition to manual spading and tamping, internally vibrate concrete with high-speed mechanical vibrators of sufficient amplitude for adequate consolidation.
3. Vertically insert and remove hand-held vibrators at points 18 in. to 30 in. apart.
4. Do not use vibrators to transport concrete in forms.
5. Vibrate concrete minimum amount required for consolidation.
6. Do not vibrate concrete placed for slab on grade except at slab edges adjacent to edge forms and at items embedded in the slab.

E. Construction Joints
1. Verify location and conformance with typical details; provide only where designated or accepted by the Owner's Representative.
2. Horizontal construction joint shall conform to CBC Section 1906.4.
3. Surface of construction joints shall be cleaned and roughened by removing the entire surface and exposing clean aggregate solidly embedded in mortar matrix.
4. Contact surface shall be thoroughly cleaned by sandblasting or chipping the entire surface not earlier than five days after the initial placement or by an accepted method that will assure equal bond such as a thorough hose washing of surface not less than two or more than four hours after concrete is placed, wash water and chalk-like material being entirely cleaned from the surface. Vertical construction joints in suspended slabs shall be sandblasted.
5. Prevent formation of shoulders and ledges.
6. Provide keys across vertical joints as indicated; in addition, place dowels across the joints.
7. Jointing Floor Slabs-on-Grade: Interior floor slabs-on-grade shall be constructed in alternate strips. Provide transverse "Soff-cut" Systems as outlined below. Locate construction joints under partitions whenever possible.
8. Control joints shall be located between construction joints.
9. Use the "Soff-cut" Systems or an approved equivalent to saw cut the joints. To control shrinkage and cracking, cut joints within 4 hours after placing and finishing the concrete. During hot weather, take all necessary measures to prevent cracking.

3.4 FINISHING - GENERAL

A. Remove fins, projections, and loose material.

B. Patch honeycomb, aggregate pockets, voids, and holes exceeding 1/4 in. diameter as follows:
1. Chip out until sound concrete is exposed to minimum depth of 1 in.

2. Prepare patching mortar with approximately 2 parts normal Portland cement, 1 part white cement, and 9 parts fine aggregate; vary proportions of cement as necessary to match color of adjacent concrete.
3. Saturate surfaces with water and fill cavities with patching mortar.
4. Fill holes left by form ties with patching mortar.
5. Cure patches as specified for concrete.

3.5 FORMED SURFACE FINISHES

A. Smooth Finish: Obtain by the use of plywood; no fins, pockmarks, and other irregularities shall be present in the exposed surfaces of concrete.

B. Scored Finish: Where indicated, roughen the concrete in an accepted manner, or etch with sharp-pointed steel tools to key or otherwise improve the mechanical bond of the surface. Such scoring or roughing shall disturb or otherwise roughen at least 10% of the area so scored.

C. Grout-Cleaned Finish
1. Prepare grout of 2 parts normal portland cement, 1 part white cement, and 4-1/2 parts fine aggregate mixed with water to consistency of thick paint.
2. Wet surfaces and rub grout on surfaces using rubber or cork float so that all small voids and imperfections are filled.
3. Allow surfaces to dry for approximately on hour, scrape off excess grout with trowel, then rub surfaces with burlap sacks.
4. Keep surfaces continuously damp for 24 hours.
5. Use on exposed wall surfaces, vertical surfaces of equipment foundations, and other vertical surfaces for which no other finish is specified.

3.6 UNFORMED SURFACE FINISHES

A. Floating
1. Provide as first stage for flatwork finishes, unless otherwise specified.
2. Thoroughly consolidate areas, strike off to screeds tamp to recess large aggregate below surface level.
3. Fill voids, reconsolidate, and re-level surfaces as necessary.
4. Do not proceed with subsequent finishes until surface water has absorbed or dried off and surface sheen has become dull.

B. Wood Float Finish
1. Also provide as second stage for other finishes, unless otherwise specified.
2. Using approved floating machines or hardwood trowels, float surfaces to required planes and shapes, working just sufficiently to bring surfaces to uniform condition.
3. Work no more than necessary to achieve uniform texture free from irregularities and screed marks; except where receiving fills or mortar beds, leave surfaces in roughened, granular condition for good mechanical bond.
4. Cut and fill surfaces as necessary to true up.
5. When followed by other finishes, floating shall leave small amount of mortar on surfaces without excess of water.

6. Do not proceed with subsequent finishes until surface water has absorbed or dried off and concrete has set sufficiently to prevent fines or water from being worked to the surface.
7. Finish texture shall be fine-grained and granular to provide good slip-resistance, and shall be reasonably free from directional trowel marks.
8. Provide for exterior and interior surfaces of buildings, unless otherwise indicated.

C. Steel Trowel Finish
1. Using finishing machines or steel trowels, trowel surfaces to produce a dense, hard, smooth steel trowel finish.
2. Commence troweling in one pass just sufficiently to flatten floated surface.
3. Wait until concrete has set sufficiently; then resume steel troweling; continue and repeat as required to obtain a hard steel trowel finish, free of blemishes, ripples, and trowel marks.
4. Do not:
   a. Use cement or sand dusting to absorb or otherwise remove surface water.
   b. Commence troweling too soon on freshly placed concrete.
   c. Overwork surfaces by excessive troweling in an area in 1 pass.
5. Work out lips, uneven levels, and other irregularities prior to final troweling.
6. Neatly tool exposed edges, expansion joints, curbs, arises, and other details.
7. Surface across joints shall be level and free from offsets.
8. Provide for interior surface not otherwise indicated or specified.

D. Broom Finish
1. For exterior flatwork and where indicated.
2. Draw a soft-bristled push broom over an initially trowel-finished surface.
3. When coarser surfaces are desired, use a stiffer-bristled broom.
4. Broom finish shall provide a non-slip surface, even if exposed to rain.

3.7 CONCRETE HARDENER

A. Apply where indicated, in accordance with the rate specified for each space per the manufacturer's printed instructions.

3.8 PROTECTION

A. Maintain concrete temperature above 55 deg. F during curing, except as modified in 03 30 00-3.01F.

B. Protect concrete from damage by sun and rain. See 03 30 00-1.07.

C. Do not subject concrete to any loads until it is completely cured and has attained its minimum 28-day design strength.

D. Protect concrete during and after curing from damage from subsequent construction operations.

E. Cover traffic areas with reinforced Kraft paper or plywood sheets; maintain paper and plywood in place and in good repair for as long as necessary to protect against damage from construction operations.

F. Keep finished areas free from traffic for a minimum of 4 days or as necessary until surfaces have set sufficiently to prevent damage.

3.9 CURING

A. Curing shall immediately follow finishing and shall be accomplished for each portion of the Work as follows:
   1. Water cure all flatwork surfaces with burlap and plastic sheeting for a minimum of 7 days by form-curing. Forms and slabs shall be wet down thoroughly at least 4 times daily or until forms are removed. At contractors option, forms may be removed when 75% concrete design strength has been reached, but not sooner than 3 days. Follow immediately with membrane curing if outside of building and with fog spray to maintain moist condition inside of building.

3.10 DEFECTIVE CONCRETE

A. Defective concrete will be repaired or replaced. Determination will be made by the Owner's Representative

B. Do not patch, fill, touch-up, repair, or replace exposed concrete except upon express direction of Owner's Representative for each individual area.

C. Defective concrete shall be repaired or replaced as recommended by the Owner's Representative at no additional expense to the Owner. Repair materials shall include cements, admixtures, epoxy, and aggregates as required by the nature of the defects.

D. With the prior acceptance of the Owner's Representative, some minor defective Work may be repaired by use of cement mortar; however, if the defects are serious or affect the strength of the structure or its appearance, the Owner's Representative may require the removal and replacement of that portion of the structure affected.

E. Immediately after removing forms, concrete surfaces shall be inspected, and pour joints, voids, rock pockets, tie holes, and similar defects shall be patched at once, but not until the surfaces have first been examined by the Owner's Representative. Submit information on patching mixture and method proposed for use to the Owner's Representative for review prior to commencing.

3.11 PATCHING

A. Allow Owner's Representative to inspect concrete surfaces immediately upon removal of forms.

B. Excessive honeycomb or embedded debris in concrete is not acceptable. Notify Owner's Representative upon discovery to determine its repair or replacement.

C. Patch imperfections as directed.

D. Patching Tie Holes

1. Cut nails and tie wires for form ties flush with the face of the concrete and leave surfaces smooth and clean.
2. Remove metal spreader ties on exposed concrete Work or snap off inside the wall surface.
3. Patch resulting cone pockets on exposed surfaces, and solidly pack with cement grout.

3.12 DRY PACKING

A. Provide for setting steel plates or bolts on concrete.

B. Completely fill voids; thoroughly compact in place.

C. Bolts or inserts which have been dry packed or grouted in place shall not be tensioned sooner than seven days after packing.

3.13 SCHEDULE

A. Where not otherwise indicated on the Drawings or in other Sections, provide concrete in accordance with the following Table:

CLASS***	MINIMUM STRENGTH	SLUMP (MAX)**	AGGREGATE (MAX)*	CEMENT LBS./CU.YD.
Building Foundations	4000	4 in.	1-1/2 in.	550
Slabs on Grade (Interior floor)	4000	4 in.	3/4 in.	550
Slabs on Grade (Exterior Walkways)	3000	4 in.	3/4 in.	470
Suspend.Slabs & Walls	4000	4 in.	3/4 in.	550
Items not otherwise Indicated	3000	4 in.	1 in.	470

* Concrete with superplasticizer designed into the mix shall arrive at the site without the superplasticizer at slump of 2 to 3 in., be verified, then have superplasticizer added at the site to attain specified slump.

** Maximum aggregate size not more than 1/3 thickness of concrete component.

*** Air Dry Weight shall not exceed 150 lbs./cu. ft. for normal weight concrete or 110 lbs./cu. ft. for lightweight concrete.

END OF SECTION 033000

SECTION 03 30 50 - CONCRETE TESTING AND INSPECTION

PART 1 GENERAL

1.1 SUMMARY

A. Section Includes
   1. Concrete testing and inspection required by other Sections.

B. Related Sections
   1. Section 032000 - Concrete Reinforcement.
   2. Section 033000 - Cast-In-Place Concrete.

1.2 REFERENCES

A. ACI 216 - Fire Endurance of Concrete Elements

B. ACI 318 - Building Code Requirements for Reinforced Concrete.

C. ASTM C 31 - Method of Making and Curing Concrete Test Specimens in the Field.

D. ASTM C 39 - Test Method for Compressive Strength of Cylindrical Concrete Specimens.

E. ASTM C 42 - Method of Obtaining and Testing Drilled Cores and Sawed Beams of Concrete.

F. ASTM C 94 - Ready-Mixed Concrete.

G. ASTM C 143 - Test Method for Slump of Portland Cement Concrete.

H. ASTM C 173 - Test on Fresh Concrete for Entrained Air.

I. AWS D1.4 - Structural Welding Code for Reinforcing Steel.

J. CBC - California Building Code; 2022 Edition.

1.3 DESCRIPTION

A. This Section describes required testing and inspection of concrete work to be performed by Independent Testing Laboratory employed by the Owner.

B. Cooperate with any testing agency employed by the Owner.

1.4 SUBMITTALS

A. Submit under provisions of Division 1.

B. Submit the following:
   1. Certified copies of mix designs for each concrete class specified.

2. Certification that materials meet requirements specified.
3. Samples only as specified.
4. Certification from vendor that samples originate from and are representative of each lot proposed for use.
5. Mill test reports for reinforcing.
6. Ready mix delivery tickets, ASTM C 94.
7. Certified copies of concrete reinforcement test results for tensile and bending strength.
8. Certified copies of concrete cylinder compressive strength test results at time intervals specified.
9. Batch plant certification.

1.5 CONDITIONS

A. Contractor shall allow the Testing Laboratory and Department's agency free access to places, whether on or off the job site, where materials are stored, proportioned, mixed, or fabricated; to places where equipment is stored or serviced; and to job site during times of preparation, installation, erection, placement, curing and patching.

B. The Contractor shall supply labor, transportation, and on-site storage facilities required by the Testing Laboratory and Department's agency for taking and preparing samples for testing.

1.6 SEQUENCING AND SCHEDULING

A. Notify the Owner’s Representative in sufficient time prior to fabrication, field welding, mixing, and placement to permit testing and inspecting without delaying work; minimum 24 hour notice required.

1.7 ENVIRONMENTAL CONDITIONS:

A. Hot Weather: Follow all requirements as per Section 03 30 00, paragraph 3.01E.

B. Cold Weather: Follow all requirements as per Section 03 30 00, paragraph 3.01F.

PART 2 PRODUCTS

2.1 MATERIALS AND TESTS

A. Test and inspect in accordance with CBC, Chapter 17.

B. Include reinforcement, welding, cements, aggregates, admixtures, and batch plant inspection.

2.2 CONCRETE

A. The Owner’s Representative or Engineer/Architect will.
   1. Review mix designs, certificates of compliance, and samples of materials proposed for use.

2. Test and inspect materials, as necessary, in accordance with ACI 318, for compliance with requirements specified in Section 03 30 00.

B. The Independent Testing Laboratory shall inspect plant prior to Work to verify following:
1. Plant is equipped with approved metering devices for determining moisture content of fine aggregate.
2. Other plant quality controls are adequate.

PART 3 EXECUTION

3.1 TESTING AND INSPECTION OF CONCRETE REINFORCEMENT

A. Independent Testing Laboratory Employed by Contractor Shall Test Reinforcing Bars as Follows:
1. Take samples from bundles as delivered to fabricator from mill; 2 specimens from each 2-1/2 tons, or fraction thereof, of each size and grade.
2. When bundles are identified by heat number, and accompanied by mill certificates, no testing of bars is required.

B. Independent Testing Laboratory Employed by Contractor Shall Inspect Welding as Follows: Inspect welding, including prior fit-up, welding equipment, and weld certification in accordance with AWS D1.4

3.2 TESTING AND INSPECTION OF CONCRETE AGGREGATE

A. Independent Testing Laboratory employed by Contractor shall test and inspect aggregate as follows: Per Table 5.1 of ACI 216R.

3.3 TESTING AND INSPECTION OF CONCRETE

A. The Independent Testing Laboratory to be Employed by the Owner Shall:
1. Perform testing in accordance with ACI 318.
2. Test slump of concrete according to ASTM C 143.
3. Test concrete for required compressive strength in accordance with CBC Chapter 17 and as follows:
   a. Make and cure specimen cylinders according to ASTM C 31 for each class poured at site as directed by Owner's Representative.
   b. Retain 1 cylinder for 7 day test, 1 for 14 day test and 3 for 28 day test. Hold 1 cylinder for subsequent testing, if necessary.
   c. Number each cylinder 1A, 1B, 1C, 1D, 1E, 1F, 2A, 2B, 2C, etc.; date each set; and keep an accurate record of placement on what each set represents.
   d. Transport specimen cylinders from job to laboratory.
   e. Test specimen cylinders at age 7 days, 14 days and age 28 days for specified strength according to ASTM C 39.
4. Take core specimens of hardened structure and test specimen according to ASTM C 42 when laboratory tests of specimen cylinders show compressive strengths below specified minimum.
5. Test for air entrainment as specified in design mix as per ASTM C 173.

B. The Contractor shall submit ticket for each batch of concrete delivered to jobsite. Ticket shall bear following information:
   1. Design Mix Number.
   2. Time of batching.
   3. Weight of cement, aggregates, water, and admixtures with maximum aggregate size.
   4. Total volume of concrete.

C. Concrete Placed Without Inspection by Owner's Representative
   1. Owner's Representative will determine the most suitable method of ascertaining quality of concrete.
   2. Contractor shall bear all expenses for X-ray or other inspection of in-place concrete.
   3. Contractor shall bear all expenses for removing concrete determined to be unsuitable.

3.4 TESTING AND INSPECTION OF WELD EMBEDS

A. The welding requirements for steel embeds shall conform to CBC Standards Chapter 19-2.

3.5 RETESTING

A. When tests or inspections reveal failure of materials to meet Contract requirements, Independent Laboratory shall provide additional tests in accordance with specified requirements as necessary until acceptance.

B. The cost of additional testing by Department's agency made necessary because of the failure of materials to meet Contract requirements will be deducted from the Contract Price.

END OF SECTION 033050

SECTION 033543 - POLISHED CONCRETE FINISHING

PART 1 - GENERAL

1.1 RELATED DOCUMENTS

A. Drawings and general provisions of the Contract, including General and Supplementary Conditions and Division 01 Specification Sections, apply to this Section.

1.2 SUMMARY

A. Section includes polished concrete finishing.

1. Concrete for polished concrete, including formwork, reinforcement, concrete materials, mixture design, placement procedures, initial finishing, and curing is specified in Section 033000 "Cast-in-Place Concrete."

B. Related Requirements:

1. Section 033000 "Cast-in-Place Concrete" for concrete not designated as polished concrete.

1.3 DEFINITIONS

A. Design Reference Sample: Sample designated by Architect in the Contract Documents that reflects acceptable surface quality and appearance of polished concrete.

1.4 PREINSTALLATION MEETINGS

A. Preinstallation Conference: Conduct conference at Project site.

1. Before submitting design mixtures, review concrete design mixture and examine procedures for ensuring quality of concrete materials. Require representatives of each entity directly concerned with polished concrete to attend, including the following:

a. Contractor's superintendent.
b. Independent testing agency responsible for concrete design mixtures.
c. Ready-mix concrete manufacturer.
d. Cast-in-place concrete subcontractor.
e. Polished concrete finishing Subcontractor, and Foreman that will perform the work.
f. Plumbing contractor – for determining floor drain and floor cleanout elevation so they are flush with the concrete after polishing.
g. Other contractors that have materials to be cast into the concrete.

2. Review cold- and hot-weather concreting procedures, curing procedures, construction joints, concrete repair procedures, concrete finishing, sequencing related to interior wall construction and protection of polished concrete.
    a. Physical requirements of completed concrete slab and slab finish.
        1) Exposed joints using a compressible filler (fiber board) product shall have a sealant top (zip strip). No fiber board exposed to view is allowed.
    b. Locations and time of test areas.
    c. Protection of surfaces not scheduled for finish application.
    d. Surface preparation.
    e. Application procedure.
    f. Quality control.
    g. Cleaning.
    h. Coordination with other work.
3. Sample panels and Mock-ups.
4. Storage of materials on new concrete.
    a. Materials stored on new concrete will cause a difference in moisture evaporation, and later the color of the concrete in that area. Do not store materials in the same location for more than seven days.

1.5 ACTION SUBMITTALS

A. Product Data: For each type of product.

B. Polishing Schedule: Submit plan showing polished concrete surfaces and schedule of polishing operations for each area of polished concrete before start of polishing operations. Include locations of all joints, including construction joints.

1.6 SAMPLES

A. Samples for Verification: For each type of exposed color/finish.
    1. Match Architect's sample or narrative for grind and polish levels.
    2. Three samples, minimum 12" x 12".

1.7 INFORMATIONAL SUBMITTALS

A. Installer Qualifications:
    1. Applicator to be familiar with the specified requirements and the methods needed for proper performance of work of this section. Applicator must have availability of proper equipment to perform work within scope of this project on a timely basis. Applicator must have successfully performed a minimum of 5 projects of similar scope and complexity.

B. Material Certificates: For each of the following, signed by manufacturers:

    1. Repair materials.
    2. Liquid floor treatments.

1.8 QUALITY ASSURANCE

A. Field Sample Panels: After approval of verification sample and before casting concrete, produce field sample panels to demonstrate the approved range of selections made under Sample submittals. Produce a minimum of three sets of full-scale panels, approximately 84 by 84 inches minimum, to demonstrate the expected range of finish, color, and appearance variations.

1. Locate panels as indicated or, if not indicated, as directed by Architect.
2. Panels to be polished by same crew that will polish the final product in the building, using the same type of equipment.
3. One panel to have a 1/8 inch to ¼ inch "bird bath" approximately 18 inches in diameter.
4. Maintain field sample panels during construction in an undisturbed condition as a standard for judging the completed Work.
5. Demolish and remove field sample panels when directed.

B. Mockups: After slab on grade is placed, create mockup to verify selections made under Sample submittals and to demonstrate typical joints, surface finish, tolerances, and standard of workmanship. Create mockup to comply with the following requirements, using materials indicated for the completed Work:

1. Create mockup in the location and of the size indicated or, if not indicated, as directed by Architect, but not less than 10 feet x 10 feet.
2. Demonstrate curing, finishing, and protecting of polished concrete.
   a. Grinding and polishing areas shall be well lit during the entire process.
3. Subject to compliance with requirements, approved mockups may become part of the completed Work if undisturbed at time of Substantial Completion.
4. Mock-up area to be polished by same crew that will polish the final product in the building, using the same type of equipment.
5. Placing, finishing and curing of concrete shall remain the same for all pours.

1.9 FIELD CONDITIONS

A. Traffic Control: Maintain access for vehicular and pedestrian traffic as required for other construction activities.

PART 2 - PRODUCTS

2.1 LIQUID FLOOR TREATMENTS **(PC-1)**

A. Penetrating Liquid Floor Treatments for Polished Concrete Finish: Clear, waterborne solution of inorganic lithium silicate materials and proprietary components; odorless; that penetrates, densifies, hardens, and is suitable for polished concrete surfaces.

1. Products: Subject to compliance with requirements, provide one of the following:
   a. ARDEX Americas; PC 50 Lithium Densifier.
   b. Euclid Chemical Company (The); an RPM company;
   c. PROSOCO, Inc; Consolideck LS.

d. L.M. Scofield Co.; Formula One Lithium Densifier MP.
e. W.R. Meadows; Liqui-Hard Ultra.
f. Retroplate.

B. Concrete Filler:

1. Basis-of-Design Product: Subject to compliance with requirements, provide Prosoco Consolideck “Grind-N-Fill” or comparable product.

C. Concrete Sealer: General purpose, medium gloss film forming.

1. Basis of Design Product: Subject to compliance with requirements, provide Prosoco "Polish Guard”, or comparable product.

2.2 JOINT SEALANTS – Product types listed in A or B below are acceptable.

A. Joint sealant for concrete floor: Self leveling, 100% solids, two component, epoxy crack filler and joint sealant.
1. Metzger/McGuire MM-80. W.R. Meadows.; REZI-WELD FLEX; or comparable product.

2. Shore Hardness ASTM-D2240: minimum 80.
3. Elongation: 5% minimum.

B. Joint sealant for concrete floor: Self leveling, 100% solids, two component, rapid curing polyurea crack filler and joint sealant. Basis of Design – Euclid Chemical; Euco Qwikjoint UVR 95 or comparable product.

1. Shore Hardness ASTM-D2240: minimum 80.
2. Tensile Strength: Minimum 700 psi.

PART 3 - EXECUTION

3.1 GENERAL

A. Adhere to industry standard grinding, honing, and polishing procedures for dry and wet grinding and honing.

B. Scrub and rinse slab surface with clean water and vacuum with auto-scrubber between and after final passes.

C. Sequential progression of diamond tooling steps shall be required and limited to no more than double the grit value of the previous diamonds used.

D. Overlap adjacent passes by 25 percent.

E. Perform each pass perpendicular to the other pass north/south then east/west; multiple passes may be needed.

F. Hand grind as required.

G. Progressively grind, hone and polish the slab surface utilizing approved diamond segments as necessary to produce Finishing requirements.
   1. Apply liquid concrete repair material to fill gaps, voids and pop-outs during grinding operation per manufacturer's published recommendations.

3.2 GRINDING/HONING/POLISHING

A. Finish: Concrete Polishing Council Class C Coarse Aggregate.

B. Appearance: Polished.

C. Apply polished concrete finish system to cured and prepared slabs to match accepted mockup.

   1. Machine grind floor surfaces to receive polished finishes level and smooth and to depth required to reveal aggregate to match approved mockup.
      a. Make first grind prior to installation of interior walls.
      b. Use hand grinding equipment along walls and corners to achieve required finish.
   2. Apply penetrating liquid floor treatment for polished concrete in polishing sequence and according to manufacturer's written instructions, allowing recommended drying time between successive coats.
   3. Continue polishing with progressively finer-grit diamond polishing pads to gloss level, to match approved mockup.
   4. Control and dispose of waste products produced by grinding and polishing operations.
   5. Neutralize and clean polished floor surfaces.
   6. Allow to dry four hours and repeat application of stain in sufficient quantity to obtain color consistent with approved mockup.
   7. Rinse until water is clear. Control, collect, and legally dispose of runoff.

3.3 JOINT SEALANT

A. Install joint sealant material at non-moving control and construction joints, and at non-moving shrinkage cracks per manufacturer's instructions.

B. Concrete shall cure a minimum of 30 days before installing joint sealant.

3.4 APPEARANCE

A. Interior exposed finished slab areas must consist of the following:
   1. Slab surface must meet the desired sheen, as discussed in Pre-Installation meeting and be consistent with approved Mock-up.
   2. Slab surface must have a consistent look and exhibit a finish that has no evidence of streaking or burnish marks.

3. White residue or hazy appearance is not acceptable.
4. Exposure of aggregate less than Class C- Coarse Aggregate is not acceptable.

3.5 PROTECTION

A. Do not allow any cutting, drilling, or other work in areas to be polished without proper protection installed on the concrete.

B. Do not allow any oil, paints, stains, solvents, or other liquids to come in contact with the areas to be polished, that may permanently mark, stain, or damage the concrete surface.

C. Provide diapers on all hydraulic equipment and lifts.

D. After polishing is complete, provide protection until Substantial Completion.

END OF SECTION 033543

SECTION 040513 - MASONRY MORTARING

PART 1 GENERAL

1.1 SUMMARY

A. Section Includes
   1. Mortar for masonry.
      a. Related Work
         1) Section 032000 - Concrete Reinforcing.
         2) Section 040516 - Masonry Grouting
         3) Section 043000 – Concrete Unit Masonry.

1.2 REFERENCES

A. For all references, use edition referenced by the 2022 edition of the California Building Code. If no edition is referenced, use latest edition.

B. 2022 California Building Code (CBC), with local amendments, if any.

C. ACI 530/ASCE 5/TMS 402- Building Code Requirements for Masonry Structures.

D. ACI 530.1/ASCE 6/TMS 602- Specifications for Masonry Structures.

E. ASTM C109- Test Method for Compressive Strength of Hydraulic Cement Mortars.

F. ASTM C144- Aggregate for Masonry Mortar.

G. ASTM C150- Portland Cement.

H. ASTM C207- Hydrated Lime for Masonry Purposes.

I. ASTM C270- Mortar for Unit Masonry.

J. ASTM C780- Preconstruction and Construction Evaluation of Mortars for Plain and Reinforced Unit Masonry.

K. ASTM C1586- Quality Assurance of Mortars

1.3 SUBMITTALS

A. Submit in accordance with Section 013300 and 013323.

B. Product Data
   1. Product data for products and materials indicated.
   2. Manufacturer’s technical bulletins and installation/application instructions.
   3. Material Safety Data Sheets (MSDS).

C. Samples
   1. Submit samples of pointing mortar for color selection.

D. Certificates
   1. Manufacturer's Certificate: Certify that products meet or exceed specified requirements.

E. Mix Designs
   1. Submit separate mix design for each type of mortar used.
   2. Indicate Proportion or Property Method to be used.
   3. Indicate any environmental condition limitations.
   4. Indicate any admixture limitations.

1.4 COORDINATION

A. Coordinate the installation of items to be embedded in masonry and provide openings in the masonry necessary for performance of the Work of other Sections.

B. Request schedules of items specified under other Sections, but installed under this Section, in addition to templates, template dimensions, and shop drawings required for the installation of those items.

1.5 MOCK-UP AND FIELD SAMPLES

A. In accordance with Section 043000.

1.6 DELIVERY, STORAGE, AND HANDLING

A. Deliver, store, and handle packaged materials in the manufacturer's original, sealed containers, each clearly identified with the manufacturer's name, and name and type of product.

B. Store materials subject to damage by dirt and moisture in a clean, dry location, off the ground, and suitably protected.

PART 2 PRODUCTS

2.1 MATERIALS

A. Portland Cement: ASTM C150, Type II or IV, gray color.

B. Hydrated Lime: ASTM C207, Type S.

C. Masonry Cement: Not permitted.

D. Mortar Aggregate: ASTM C144, standard masonry type.

E. Water: Clean and potable.

F. Pointing Mortar
   1. As indicated for joints of prefaced block units.
   2. Color to be approved by the Owner's Representative from sample submittal.
   3. Manufacturers
      a. Laticrete; Latapoxy SP-100.
      b. Mapei Corporation; Kerapoxy.

c. Approved Equal.

2.2 ADMIXTURES

A. Antifreeze Compounds: Not permitted.

B. Air Entrainment Admixtures: Not permitted.

2.3 MIX DESIGN

A. CBC Section 2103A.8 and ASTM C270, Type S.

B. Minimum Compressive Strength: 1,800 psi minimum, unless noted otherwise.

PART 3 EXECUTION

3.1 EXAMINATION

A. Verify that field conditions are acceptable and are ready to receive the Work. Notify the Owner's Representative, in writing, of any conditions requiring corrective action.

B. If unsatisfactory conditions exist, do not commence the installation until such conditions have been corrected. Beginning installation means acceptance of existing conditions.

3.2 MIXING

A. Thoroughly mix mortar ingredients in quantities needed for immediate use.

B. Lime shall be the last material added to the mixer.

C. Materials shall be measured in suitable calibrated devices. Shovel measurements shall not be used.

D. Use mortar within two hours after mixing at temperatures of 80 degrees F, or 2-1/2 hours at temperatures under 50 degrees F.

3.3 INSTALLATION

A. Install mortar in accordance with Section 043000.

3.4 FIELD QUALITY CONTROL

A. Maintain materials and surrounding air temperatures to minimum 40 degrees F prior to, during, and 48 hours after completion of the Work.

B. Construct masonry during cold weather in accordance with TMS 402/ACI 530/ASCE 6, ART 1.8C.

C. Construct masonry during hot weather in accordance with TMS 402/ACI 530/ASCE 6, ART 1.8D.

3.5 TESTING AND INSPECTION

A. Testing and inspection shall be in accordance with TMS 402/ACI 530/ASCE 6, SECTION 1.6 A TABLES 3, 4 & 5..

B. Independent Testing Laboratory shall provide the following testing:
   1. Perform testing in accordance with Section 01 45 29.
   2. Compressive Strength: Test in accordance with ASTM C109 and C1586.
      a. Gather test samples as follows:
         1) Prior to the start of the Work.
         2) At start of the Work on three consecutive days.
         3) For each 5,000 sf of wall constructed or at least once a week for the duration of the Work.
         4) Whenever any change in the materials or job conditions occur or as directed by the Owner's Representative.
      b. Test Samples
         1) Retain one specimen for 7 day test, one for 14 day test, one for 28 day test, and one specimen for subsequent testing if necessary.
         2) Number each specimen 1a, 1b, 1c, 1d, 2a, 2b, 2c, 2d, and so forth; date each set; keep an accurate record of placement location that each set represents.
      c. Transport test specimens from jobsite to laboratory.
      d. Test specimen at age 7 days, 14 days, and 28 days for specified strength.

C. Owner's Representative will provide the following inspections:
   1. Review mix designs, certificates of compliance, and samples of materials proposed for use.
   2. Hot and cold weather construction procedures.
   3. Mortar placement, sampling, and testing procedures.
   4. Placement of all embedded items.

3.6 CLEANING

A. Remove excess mortar from grout spaces as the Work progresses.

B. Remove excess mortar and mortar smears.

3.7 REPAIR AND ADJUSTMENT

A. Identify and repair in accordance with Section 043000.

3.8 DEFECTIVE WORK

A. Identify and resolve in accordance with Section 043000.

3.9 PROTECTION

A. Protect masonry in accordance with Section 043000.

END OF SECTION 040513

SECTION 040516 - MASONRY GROUTING

PART 1 - GENERAL

1.1 SUMMARY

A. Section Includes
   1. Grout for masonry.

B. Related Work
   1. Section 032000 - Concrete Reinforcing.
   2. Section 040513 - Masonry Mortaring

1.2 REFERENCES

A. For all references, use edition referenced by the 2022 California Building Code. If no edition is referenced, use latest edition.

B. 2022 California Building Code (CBC), with local amendments, if any.

C. ACI 530/ASCE 5/TMS 402- Building Code Requirements for Masonry Structures.

D. ACI 530.1/ASCE 6/TMS 602- Specifications for Masonry Structures.

E. ASTM C150- Portland Cement.

F. ASTM C207- Hydrated Lime for Masonry Purposes.

G. ASTM C404- Aggregates for Masonry Grout.

H. ASTM C476- Grout for Unit Masonry.

I. ASTM C1019- Test Method for Sampling and Testing Grout.

1.3 SUBMITTALS

A. Submit in accordance with Section 013300 and 013323.

B. Product Data
   1. Product data for products and materials indicated.
   2. Manufacturer’s technical bulletins and installation/application instructions.
   3. Material Safety Data Sheets (MSDS).

C. Certificates
   1. Manufacturer’s Certificate: Certify that products meet or exceed specified requirements.

D. Mix Designs

1. Submit separate mix design for each type of grout used.
2. Indicate Proportion or Property Method to be used.
3. Indicate any environmental condition limitations.
4. Indicate any admixture limitations.

E. Grout Placement Checklist: When required by the Owner's Representative, provide checklist in a form approved by the Owner's Representative. Checklist to indicate items of the Work that must be signed by the Contractor and the Owner's Representative prior to placement of grout.

1.4 COORDINATION

A. Coordinate the installation of items to be embedded in masonry and provide openings in the masonry necessary for performance of the Work of other Sections.

B. Request schedules of items specified under other Sections, but installed under this Section, in addition to templates, template dimensions, and shop drawings required for the installation of those items.

1.5 MOCK-UP AND FIELD SAMPLES

A. In accordance with Section 043000.

1.6 DELIVERY, STORAGE, AND HANDLING

A. Deliver, store, and handle packaged materials in the manufacturer's original, sealed containers, each clearly identified with the manufacturer's name, and name and type of product.

B. Store materials subject to damage by dirt and moisture in a clean, dry location, off the ground, and suitably protected.

PART 2 - PRODUCTS

2.1 MATERIALS

A. Portland Cement: ASTM C150, Type II or IV, gray color.

B. Hydrated Lime: ASTM C207, Type S.

C. Masonry Cement: Not permitted.

D. Grout Aggregate: ASTM C404.

E. Water: Clean and potable.

2.2 ADMIXTURES

A. Antifreeze Compounds: Not permitted.

B. Air Entrainment Admixtures: Not permitted.

2.3 MIX DESIGNS

A. CBC Section 2103 and ASTM C476.

B. Minimum Compressive Strength: 2,000 psi minimum, unless noted otherwise.

PART 3 - EXECUTION

3.1 EXAMINATION

A. Verify that field conditions are acceptable and are ready to receive the Work. Notify the Owner's Representative, in writing, of any conditions requiring corrective action.

B. Verify that anchors, seats, plates, embeds, reinforcing, and other items to be cast into masonry are accurately placed, positioned securely, and will not cause hardship in placing grout.

C. If unsatisfactory conditions exist, do not commence the installation until such conditions have been corrected. Beginning installation means acceptance of existing conditions.

3.2 PREPARATION

A. Thoroughly clean reinforcement and other embedded items free from loose rust and other objectionable matter.

B. Clean surfaces of concrete and masonry units; remove dust, dirt, debris, oil, grease, and other foreign substances which would affect bond of mortar.

C. The grout space shall be cleaned so that all spaces to be filled with grout do not contain mortar projections greater than 1/4 inch, mortar droppings, or other foreign material.

D. Plug cleanout holes with masonry units to prevent leakage of grout materials. Brace masonry for wet grout pressure.

3.3 INSTALLATION

A. All masonry shall be solidly grouted.

B. Low Lift Grouting: CBC Section 2104.1.

C. High Lift Grouting: CBC Section 2104.1.

D. Place and consolidate grout fill without displacing reinforcing; consolidate using mechanical vibrator.

E. Grout spaces less than 3 inches in width with fine grout using low lift grouting techniques.

F. Grout spaces 3 inches or greater in width with coarse grout using high or low lift grouting techniques.

G. The grouting of any section of wall shall be completed in one day with no interruptions greater than one hour.

H. Between grout pours, a horizontal construction joint shall be formed by stopping all wythes at the same elevation. Terminate grout 1-1/2 inches below a mortar joint, except at the top of the wall. Where bond beam occurs, the grout pour shall be stopped a minimum of 1/2 inch below top of masonry.

3.4 FIELD QUALITY CONTROL

A. Maintain materials and surrounding air temperatures to minimum 40 degrees F prior to, during, and 48 hours after completion of the Work.

B. Construct masonry during cold weather in accordance with TMS 402/ACI 530/ASCE 6, ART 1.8C.

C. Construct masonry during hot weather in accordance with TMS 402/ACI 530/ASCE 6, ART 1.8D.

3.5 TESTING AND INSPECTION

A. Testing and inspection shall be in accordance with TMS 402/ACI 530/ASCE 6, SECTION 1.6 A TABLES 3,4 and 5.

B. Independent Testing Laboratory shall provide the following testing:
   1. Perform testing in accordance with Section 014529.
   2. Slump: Test in accordance with ASTM C1019.
      a. Test at same time samples are made for compressive strength tests.
   3. Compressive Strength: Test in accordance with ASTM C1019.
      a. Gather test samples as follows:
         1) Prior to the start of the Work.
         2) At start of the Work on three consecutive days.
         3) For each 5,000 sf of wall constructed or at least once a week for the duration of Work.
         4) Whenever any change in the materials or job conditions occur or as directed by the Owner's Representative.
      b. Test Samples
         1) Retain one specimen for 7 day test, one for 14 day test, one for 28 day test, and one specimen for subsequent testing if necessary.

2) Number each specimen 1a, 1b, 1c, 1d, 2a, 2b, 2c, 2d, and so forth; date each set; keep an accurate record of placement location that each set represents.

c. Transport test specimens from jobsite to laboratory.

d. Test specimen at age 7 days, 14 days, and 28 days for specified strength.

C. Owner's Representative will provide the following inspections:

1. Review mix designs, certificates of compliance, and samples of materials proposed for use.
2. Hot and cold weather construction procedures.
3. Grout space prior to grouting operations.
4. Grout placement, sampling, and testing procedures.
5. Placement of all embedded items.

3.6 CLEANING

A. In accordance with Section 043000.

3.7 REPAIR AND ADJUSTMENT

A. Identify and repair in accordance with Section 043000.

3.8 DEFECTIVE WORK

A. Identify and resolve in accordance with Section 043000.

3.9 PROTECTION

A. Protect masonry in accordance with Section 043000.

END OF SECTION 040516

SECTION 042000 - UNIT MASONRY

PART 1 - GENERAL

1.1 RELATED DOCUMENTS

A. Drawings and general provisions of the Contract, including General and Supplementary Conditions and Division 01 Specification Sections, apply to this Section.

1.2 SUMMARY

A. Section Includes:

1. Concrete masonry units.
2. Decorative concrete masonry units.
3. Clay face brick.
4. Mortar and grout.
   a. Pigmented Mortar.
5. Steel reinforcing bars.
6. Masonry-joint reinforcement.
7. Ties and anchors.
8. Miscellaneous masonry accessories.
9. Knox Box.

1.3 DEFINITIONS

A. CMU(s): Concrete masonry unit(s).

B. Reinforced Masonry: Masonry containing reinforcing steel in grouted cells.

1.4 PREINSTALLATION MEETINGS

A. Preinstallation Conference: Conduct conference at Project site.
   1. Items to be specifically discussed are:
      a. Vertical reinforcing requirements, locations, and installation methods to achieve proper clearances.
      b. Grouting procedures; height limits, keying of subsequent grout lifts, inspections.
      c. Cleaning of decorative masonry units. See paragraph 3.17.C.

1.5 ACTION SUBMITTALS

A. Product Data: For each type of product.

B. Shop Drawings: For the following:

1. Masonry Units: Show sizes, profiles, coursing, and locations of special shapes.
2. Reinforcing Steel: Detail bending, lap lengths, and placement of unit masonry reinforcing bars. Comply with ACI 315.
3. Fabricated Flashing: Detail corner units, end-dam units, and other special applications.

C. Samples for Initial Selection:

1. Decorative CMUs, in the form of small-scale units.
2. Clay face brick.
3. Pigmented mortar.

1.6 INFORMATIONAL SUBMITTALS

A. Material Certificates: For each type and size of the following:

1. Masonry units.

   a. Include data on material properties, and material test reports substantiating compliance with requirements.
2. Mortar admixtures.
3. Preblended, dry mortar mixes. Include description of type and proportions of ingredients.
4. Grout mixes. Include description of type and proportions of ingredients.
5. Reinforcing bars.
6. Joint reinforcement.
7. Anchors, ties, and metal accessories.
8. Integral water repellent used in CMUs.

B. Mix Designs: For each type of mortar and grout. Include description of type and proportions of ingredients.

1. Include test reports, according to ASTM C 1019, for grout mixes required to comply with compressive strength requirement.

C. Statement of Compressive Strength of Masonry: For each combination of masonry unit type and mortar type, provide statement of average net-area compressive strength of masonry units, mortar type, and resulting net-area compressive strength of masonry determined according to TMS 602/ACI 530.1/ASCE 6.

D. Cold-Weather and Hot-Weather Procedures: Detailed description of methods, materials, and equipment to be used to comply with requirements.

1.7 QUALITY ASSURANCE

A. Testing Agency Qualifications: Qualified according to ASTM C1093 for testing indicated.

B. Mockups: Build mockups to verify selections made under Sample submittals, to demonstrate aesthetic effects, and to set quality standards for materials and execution.
   1. Build mockups for each type of exposed unit masonry construction in sizes approximately 60 inches long by 48 inches high by full thickness, including face and backup wythes and accessories.

      a. Include a sealant-filled joint at least 48 long in each mockup. Provide a minimum of three different color sealants, as selected by the Architect.
      b. Include lower corner of window opening, at upper corner of exterior wall mockup. Make opening approximately 12 inches wide by 16 inches high.
      c. Include through-wall flashing installed for a 24-inch length in corner of exterior wall mockup approximately 16 inches down from top of mockup, with a 12-inch length of flashing left exposed to view (omit masonry above half of flashing).
      d. Include sheathing, air barrier, veneer anchors, flashing, cavity drainage material, and weep holes in exterior masonry-veneer wall mockup.
   2. Clean one-half of exposed faces of mockups with masonry cleaner as indicated.
   3. Protect accepted mockups from the elements with weather-resistant membrane.
   4. Approval of mockups is for color, texture, and blending of masonry units; relationship of mortar and sealant colors to masonry unit colors; tooling of joints; and aesthetic qualities of workmanship.

      a. Approval of mockups is also for other material and construction qualities specifically approved by Architect in writing.
      b. Approval of mockups does not constitute approval of deviations from the Contract Documents contained in mockups unless Architect specifically approves such deviations in writing.

1.8 DELIVERY, STORAGE, AND HANDLING

A. Store masonry units on elevated platforms in a dry location. If units are not stored in an enclosed location, cover tops and sides of stacks with waterproof sheeting, securely tied. If units become wet, do not install until they are dry.

B. Store cementitious materials on elevated platforms, under cover, and in a dry location. Do not use cementitious materials that have become damp.

C. Store aggregates where grading and other required characteristics can be maintained and contamination avoided.

D. Deliver preblended, dry mortar mix in moisture-resistant containers. Store preblended, dry mortar mix in delivery containers on elevated platforms in a dry location or in covered weatherproof dispensing silos.

E. Store masonry accessories, including metal items, to prevent corrosion and accumulation of dirt and oil.

1.9 FIELD CONDITIONS

A. Protection of Masonry: During construction, cover tops of walls, projections, and sills with waterproof sheeting at end of each day's work. Cover partially completed masonry when construction is not in progress.

1. Extend cover a minimum of 24 inches down both sides of walls, and hold cover securely in place.
2. Where one wythe of multiwythe masonry walls is completed in advance of other wythes, secure cover a minimum of 24 inches down face next to unconstructed wythe, and hold cover in place.

B. Do not apply uniform floor or roof loads for at least 12 hours and concentrated loads for at least three days after building masonry walls or columns.

C. Stain Prevention: Prevent grout, mortar, and soil from staining the face of masonry to be left exposed or painted. Immediately remove grout, mortar, and soil that come in contact with such masonry.

1. Protect base of walls from rain-splashed mud and from mortar splatter by spreading coverings on ground and over wall surface.
2. Protect sills, ledges, and projections from mortar droppings.
3. Protect surfaces of window and door frames, as well as similar products with painted and integral finishes, from mortar droppings.
4. Turn scaffold boards near the wall on edge at the end of each day to prevent rain from splashing mortar and dirt onto completed masonry.

D. Cold-Weather Requirements: Do not use frozen materials or materials mixed or coated with ice or frost. Do not build on frozen substrates. Remove and replace unit masonry damaged by frost or by freezing conditions. Comply with cold-weather construction requirements contained in TMS 602/ACI 530.1/ASCE 6.

1. Cold-Weather Cleaning: Use liquid cleaning methods only when air temperature is 40 deg F and higher and will remain so until masonry has dried, but not less than seven days after completing cleaning.

E. Hot-Weather Requirements: Comply with hot-weather construction requirements contained in TMS 602/ACI 530.1/ASCE 6.

PART 2 - PRODUCTS

2.1 MANUFACTURERS

A. Source Limitations for Masonry Units: Obtain exposed masonry units of a uniform texture and color, or a uniform blend within the ranges accepted for these characteristics, from single source from single manufacturer for each product required.

B. Source Limitations for Mortar Materials: Obtain mortar ingredients of a uniform quality, including color for exposed masonry, from single manufacturer for each cementitious component and from single source or producer for each aggregate.

2.2 PERFORMANCE REQUIREMENTS

A. Provide structural unit masonry that develops indicated net-area compressive strengths at 28 days.

1. Determine net-area compressive strength of masonry from average net-area compressive strengths of masonry units and mortar types (unit-strength method) according to TMS 602/ACI 530.1/ASCE 6.
2. Determine net-area compressive strength of masonry by testing masonry prisms according to ASTM C 1314.

2.3 UNIT MASONRY, GENERAL

A. Masonry Standard: Comply with TMS 602/ACI 530.1/ASCE 6, except as modified by requirements in the Contract Documents.

B. Defective Units: Referenced masonry unit standards may allow a certain percentage of units to contain chips, cracks, or other defects exceeding limits stated. Do not use units where such defects are exposed in the completed Work.

C. Fire-Resistance Ratings: Comply with requirements for fire-resistance-rated assembly designs indicated.

1. Where fire-resistance-rated construction is indicated, units shall be listed and labeled by a qualified testing agency acceptable to authorities having jurisdiction.

2.4 CONCRETE MASONRY UNITS

A. Shapes: Provide shapes indicated and as follows, with exposed surfaces matching exposed faces of adjacent units unless otherwise indicated.

1. Provide special shapes for lintels, corners, jambs, sashes, movement joints, headers, bonding, and other special conditions.
2. Provide bullnose units in the Detention area, and square or double square units for all other outside corners unless otherwise indicated.

B. Integral Water Repellent: Provide units made with integral water repellent for exterior units.

1. Integral Water Repellent: Liquid polymeric, integral water-repellent admixture that does not reduce flexural bond strength. Units made with integral water repellent, when tested according to ASTM E514/E514M as a wall assembly made with mortar containing integral water-repellent manufacturer's mortar additive, with test period extended to 24 hours, shall show no visible water or leaks on the back of test specimen.

C. CMUs: ASTM C 90, Grade N, Moisture Controlled.

1. Unit Compressive Strength: Provide units with minimum average net-area compressive strength of 2800 psi.
2. Density Classification: Medium weight.
3. Size (Width): Manufactured to dimensions 3/8 inch less than nominal dimensions.

D. Decorative CMUs: ASTM C90.
1. Unit Compressive Strength: Provide units with minimum average net-area compressive strength of 2800 psi.
2. Density Classification: Light/Medium weight.
3. Size (Width): Manufactured to dimensions specified in "CMUs" Paragraph. Size as indicated on drawings.
4. Pattern and Texture:
   a. Standard pattern, Shot Blast finish.
      1) Basalite Concrete Products, LLC, Shot Blast Concrete Masonry Units, Color: 113.

2.5 BRICK

A. General: Provide shapes indicated and as follows, with exposed surfaces matching finish and color of exposed faces of adjacent units:

1. For ends of sills and caps and for similar applications that would otherwise expose unfinished brick surfaces, provide units without cores or frogs and with exposed surfaces finished.
2. Provide special shapes for applications where stretcher units cannot accommodate special conditions, including those at corners, movement joints, bond beams, sashes, and lintels.
3. Provide special shapes for applications requiring brick of size, form, color, and texture on exposed surfaces that cannot be produced by sawing.
4. Provide special shapes for applications where shapes produced by sawing would result in sawed surfaces being exposed to view.

B. Clay Face Brick: Facing brick complying with ASTM C216.
   1. Grade: SW.
   2. Type: FBX.
   3. Initial Rate of Absorption: Less than 30 g/30 sq. in. per minute when tested according to ASTM C67.
   4. Efflorescence: Provide brick that has been tested according to ASTM C67 and is rated "not effloresced."
   5. Size (Actual Dimensions): Modular 3-5/8 inches wide by 2 1/4 inches high by 7 5/8 inches ong.
   6. Application: Use where brick is exposed unless otherwise indicated.

   7. Color and Texture:
      a. Modular Brick:
         1) H.C. Muddox; “Old Town Red”. Colored mortar to be selected by Architect.

2.6 MORTAR AND GROUT MATERIALS

A. Portland Cement: ASTM C 150/C 150M, Type I or II, except Type III may be used for cold-weather construction.

   1. Alkali content shall not be more than 0.1 percent when tested according to ASTM C 114.

B. Hydrated Lime: ASTM C 207, Type S.

C. Portland Cement-Lime Mix: Packaged blend of portland cement and hydrated lime containing no other ingredients.

D. Mortar Pigments: Natural and synthetic iron oxides and chromium oxides, compounded for use in mortar mixes and complying with ASTM C979/C979M. Use only pigments with a record of satisfactory performance in masonry mortar. Use white cement for Field Color Ground Face block to obtain a near white mortar color.

   1. Basis-of-Design Product: Subject to compliance with requirements, provide Solomon Colors, Inc. ; SGS Mortar Colors. or a comparable product by one of the following:

      a. Davis Colors.
      b. Euclid Chemical Company (The); an RPM company.
   2. Color: Soloman Colors, Inc.: 40A.

E. Aggregate for Mortar: ASTM C 144.

   1. For mortar that is exposed to view, use washed aggregate consisting of natural sand or crushed stone.
   2. For joints less than 1/4 inch thick, use aggregate graded with 100 percent passing the No. 16 sieve.

F. Aggregate for Grout: ASTM C 404.

G. Water: Potable.

H. Water-Repellent Admixture: Liquid water-repellent mortar admixture intended for use with CMUs containing integral water repellent from same manufacturer.

I. Cold-Weather Admixture: Nonchloride, noncorrosive, accelerating admixture complying with ASTM C494/C494M, Type C, and recommended by manufacturer for use in masonry mortar of composition indicated.

2.7 REINFORCEMENT

A. Uncoated-Steel Reinforcing Bars: ASTM A 615/A 615M or ASTM A 996/A 996M, Grade 60.

B. Reinforcing Bar Positioners: Wire units designed to fit into mortar bed joints spanning masonry unit cells and to hold reinforcing bars in center of cells. Units are formed from 0.148-inch steel wire, hot-dip galvanized after fabrication. Provide units designed for number of bars indicated.

C. Masonry-Joint Reinforcement, General: ASTM A 951/A 951M.

1. Interior Walls: Hot-dip galvanized carbon steel.
2. Exterior Walls: Hot-dip galvanized carbon steel.
3. Wire Size for Side Rods: 0.148-inch diameter.
4. Wire Size for Cross Rods: 0.148-inch diameter.
5. Wire Size for Veneer Ties: 0.148-inch diameter.
6. Spacing of Cross Rods, Tabs, and Cross Ties: Not more than 16 inches o.c.
7. Provide in lengths of not less than 10 feet, with prefabricated corner and tee units.

D. Masonry-Joint Reinforcement for Single-Wythe Masonry: Ladder or truss type with single pair of side rods.

E. Masonry-Joint Reinforcement for Multiwythe Masonry:

1. Basis-of-Design Product: Subject to compliance with requirements, provide Hohmann & Barnard, Inc; 270-2X Ladder Eye with 2X-Hook with seismic clip and continuous wire or a comparable product by one of the following:

   a. Heckmann Building Products, Inc.
   b. Wire-Bond.

2. Adjustable (two-piece) type, either ladder or truss design, with one side rod at each face shell of backing wythe and with separate adjustable ties with pintle-and-eye connections having a maximum horizontal play of 1/16 inch and maximum vertical adjustment of 1-1/4 inches. Size ties to extend at least halfway through facing wythe but with at least 5/8-inch cover on outside face.

a. Product shall be designed for use in an extra wide cavity, exceeding 4 ½ inches, and meet the requirements of TMS402 and ACI 530

2.8 TIES AND ANCHORS

A. General: Ties and anchors shall extend at least 1-1/2 inches into veneer but with at least a 5/8-inch cover on outside face.

B. Materials: Provide ties and anchors specified in this article that are made from materials that comply with the following unless otherwise indicated:
   1. Hot-Dip Galvanized, Carbon-Steel Wire: ASTM A 82/A 82M, with ASTM A 153/A 153M, Class B-2 coating.
   2. Galvanized-Steel Sheet: ASTM A 653/A 653M, Commercial Steel, G60 zinc coating.
   3. Steel Sheet, Galvanized after Fabrication: ASTM A 1008/A 1008M, Commercial Steel, with ASTM A 153/A 153M, Class B coating.
   4. Steel Plates, Shapes, and Bars: ASTM A 36/A 36M.

C. Adjustable Anchors for Connecting to Structural Steel Framing: Provide anchors that allow vertical or horizontal adjustment but resist tension and compression forces perpendicular to plane of wall.

   1. Anchor Section for Welding to Steel Frame: Crimped 1/4-inch- diameter, hot-dip galvanized steel wire.
   2. Tie Section: Triangular-shaped wire tie made from 0.187-inch- diameter, hot-dip galvanized steel wire.

D. Adjustable Anchors for Connecting to Concrete: Provide anchors that allow vertical or horizontal adjustment but resist tension and compression forces perpendicular to plane of wall.

   1. Connector Section: Dovetail tabs for inserting into dovetail slots in concrete and attached to tie section; formed from 0.060-inch- thick steel sheet, galvanized after fabrication.

   2. Tie Section: Triangular-shaped wire tie made from 0.187-inch- diameter, hot-dip galvanized steel wire.

2.9 EMBEDDED FLASHING MATERIALS

A. Metal Flashing: Provide metal flashing complying with SMACNA's "Architectural Sheet Metal Manual" and as follows:

   1. Fabricate through-wall flashing with snaplock receiver on exterior face where indicated to receive counterflashing.
   2. Fabricate through-wall flashing with stainless steel drip edge unless otherwise indicated. Fabricate by extending flashing 1/2 inch out from wall, with outer edge bent down 30 degrees.

3. Fabricate metal drip edges from stainless steel. Extend at least 3 inches into wall and 1/2 inch out from wall, with outer edge bent down 30 degrees.

B. Flexible Flashing: Use the following unless otherwise indicated:

1. Stainless Steel Fabric Flashing: Composite, flashing product consisting of 2-mil of Type 304 stainless steel sheet, bonded to a layer of polymeric fabric, to produce an overall thickness of 40-mil.

a. Manufacturers: Subject to compliance with requirements, provide products by one of the following:
1) York Manufacturing, Inc.; Multi-Flash SS
2) Illinois Products, Inc.; IPCO Stainless Steel Fabric Flashing
3) Prosoco, Inc.; R-Guard SS ThruWall
4) STS Coatings, Inc.; Wall Guardian Stainless Steel TWF
5) TK Products, Inc.; TK TWF

C. Application: Unless otherwise indicated, use the following:

1. Where flashing is indicated to receive counterflashing, use metal flashing.
2. Where flashing is indicated to be turned down at or beyond the wall face, use metal flashing.
3. Where flashing is partly exposed and is indicated to terminate at the wall face, use metal flashing or flexible flashing with a metal drip edge.
4. Where flashing is fully concealed, use flexible flashing.

D. Adhesives, Primers, and Seam Tapes for Flashings: Flashing manufacturer's standard products or products recommended by flashing manufacturer for bonding flashing sheets to each other and to substrates.

E. Termination Bars for Flexible Flashing: Stainless steel bars 1/8 inch by 1 inch.

F. Sealants for Sheet Metal Flashings:
1. Elastomeric Sealant: ASTM C920, chemically curing urethane or silicone sealant as recommended by the manufacturer; of type, grade, class, and use classifications required to seal joints in sheet metal flashing and remain watertight.

2.10 MISCELLANEOUS MASONRY ACCESSORIES

A. Compressible Filler: Premolded filler strips complying with ASTM D 1056, Grade 2A1; compressible up to 35 percent; of width and thickness indicated; formulated from neoprene.

B. Preformed Control-Joint Gaskets: Made from styrene-butadiene-rubber compound, complying with ASTM D 2000, Designation M2AA-805 and designed to fit standard sash block and to maintain lateral stability in masonry wall; size and configuration as indicated.

C. Bond-Breaker Strips: Asphalt-saturated felt complying with ASTM D 226/D 226M, Type I (No. 15 asphalt felt).

D. Weep/Cavity Vent Products: Use the following unless otherwise indicated:
   1. Cellular Plastic Weep/Vent: One-piece, flexible extrusion made from UV-resistant polypropylene copolymer, full height and width of head joint and depth 1/8 inch less than depth of outer wythe, in color selected from manufacturer's standard.

      a. Products: Subject to compliance with requirements, provide one of the following:

         1) Advanced Building Products Inc.; Mortar Maze Weep Vent.
         2) Heckmann Building Products, Inc.; No. 85 Cell Vent.
         3) Hohmann & Barnard, Inc; QV Quadro-Vent.
         4) Wire-Bond; Cell Vent (#3601).

E. Cavity Drainage Material: Free-draining mesh, made from polymer strands that will not degrade within the wall cavity.

   1. Products: Subject to compliance with requirements, provide one of the following:

      a. Advanced Building Products Inc.;.
      b. Hohmann & Barnard, Inc; Mortar Trap.
      c. Mortar Net Solutions; Mortar Net with Insect Barrier.
      d. Wire-Bond; Cavity Net DT.
      e. York Manufacturing, Inc; Weep-Net.
   2. Configuration: Provide one of the following:

      a. Strips, full depth of cavity and 10 inches high, with dovetail-shaped notches 7 inches deep that prevent clogging with mortar droppings.
      b. Strips, not less than 1-1/2 inches thick and 10 inches high, with dimpled surface designed to catch mortar droppings and prevent weep holes from clogging with mortar. Cavity is 1 ¾ inch.

F. Knox Box (Rapid Entry Key Box):
   1. Products: Subject to compliance with requirements, provide the following:

      a. Knox Company; Knox Box 3200, Model 3270.
         1) Recessed mounted
         2) Color: As selected by Architect.

2.11 MASONRY CLEANERS

A. Proprietary Acidic Cleaner: Manufacturer's standard-strength cleaner designed for removing mortar/grout stains, efflorescence, and other new construction stains from new masonry without discoloring or damaging masonry surfaces. Use product expressly approved for intended use by cleaner manufacturer and manufacturer of masonry units being cleaned.

1. Manufacturers: Subject to compliance with requirements, provide products by one of the following:

   a. Diedrich Technologies, Inc.; a Hohmann & Barnard company.
   b. PROSOCO, Inc.
2. For decorative CMU, use only products recommended by the manufacturer. Follow all manufacturer cleaning procedures.

2.12 MORTAR AND GROUT MIXES

A. General: Do not use admixtures, including pigments, air-entraining agents, accelerators, retarders, water-repellent agents, antifreeze compounds, or other admixtures unless otherwise indicated.

   1. Do not use calcium chloride in mortar or grout.
   2. Use portland cement-lime mortar unless otherwise indicated.

B. Preblended, Dry Mortar Mix: Furnish dry mortar ingredients in form of a preblended mix. Measure quantities by weight to ensure accurate proportions, and thoroughly blend ingredients before delivering to Project site.

C. Mortar for Unit Masonry: Comply with ASTM C 270, Proportion Specification. Provide the following types of mortar for applications stated unless another type is indicated.
   1. For reinforced masonry, use Type S.
   2. For exterior, above-grade, load-bearing and nonload-bearing walls and parapet walls; for interior load-bearing walls; and for other applications where another type is not indicated, use Type S.
   3. For interior nonload-bearing partitions, Type N.

D. Pigmented Mortar: Use colored cement products.
   1. Application: Use pigmented mortar for exposed mortar joints as listed in Part II of this section.

E. Grout for Unit Masonry: Comply with ASTM C 476.

   1. Use grout of type indicated or, if not otherwise indicated, of type (fine or coarse) that will comply with TMS 602/ACI 530.1/ASCE 6 for dimensions of grout spaces and pour height.
   2. Proportion grout in accordance with ASTM C1019, 2,250 psi.
   3. Provide grout with a slump of 8 to 11 inches as measured according to ASTM C 143/C 143M.

PART 3 - EXECUTION

3.1 EXAMINATION

A. Examine conditions, with Installer present, for compliance with requirements for installation tolerances and other conditions affecting performance of the Work.

1. For the record, prepare written report, endorsed by Installer, listing conditions detrimental to performance of the Work.
2. Verify that foundations are within tolerances specified.
3. Verify that reinforcing dowels are properly placed.
4. Verify that substrates are free of substances that impair mortar bond.

B. Before installation, examine rough-in and built-in construction for piping systems to verify actual locations of piping connections.

C. Proceed with installation only after unsatisfactory conditions have been corrected.

3.2 INSTALLATION, GENERAL

A. Thickness: Build cavity and composite walls and other masonry construction to full thickness shown. Build single-wythe walls to actual widths of masonry units, using units of widths indicated.

B. Build chases and recesses to accommodate items specified in this and other Sections.

C. Leave openings for equipment to be installed before completing masonry. After installing equipment, complete masonry to match construction immediately adjacent to opening.

D. Use full-size units without cutting if possible. If cutting is required to provide a continuous pattern or to fit adjoining construction, cut units with motor-driven saws; provide clean, sharp, unchipped edges. Allow units to dry before laying unless wetting of units is specified. Install cut units with cut surfaces and, where possible, cut edges concealed.

E. Select and arrange units for exposed unit masonry to produce a uniform blend of colors and textures. Mix units from several pallets or cubes as they are placed.

F. Matching Existing Masonry: Match coursing, bonding, color, and texture of existing masonry.

3.3 TOLERANCES

A. Dimensions and Locations of Elements:

1. For dimensions in cross section or elevation, do not vary by more than plus 1/2 inch or minus 1/4 inch.
2. For location of elements in plan, do not vary from that indicated by more than plus or minus 1/2 inch.
3. For location of elements in elevation, do not vary from that indicated by more than plus or minus 1/4 inch in a story height or 1/2 inch total.

B. Lines and Levels:

1. For bed joints and top surfaces of bearing walls, do not vary from level by more than 1/4 inch in 10 feet, or 1/2-inch maximum.
2. For conspicuous horizontal lines, such as lintels, sills, parapets, and reveals, do not vary from level by more than 1/8 inch in 10 feet, 1/4 inch in 20 feet, or 1/2-inch maximum.
3. For vertical lines and surfaces, do not vary from plumb by more than 1/4 inch in 10 feet, 3/8 inch in 20 feet, or 1/2-inch maximum.
4. For conspicuous vertical lines, such as external corners, door jambs, reveals, and expansion and control joints, do not vary from plumb by more than 1/8 inch in 10 feet, 1/4 inch in 20 feet, or 1/2-inch maximum.
5. For lines and surfaces, do not vary from straight by more than 1/4 inch in 10 feet, 3/8 inch in 20 feet, or 1/2-inch maximum.
6. For vertical alignment of exposed head joints, do not vary from plumb by more than 1/4 inch in 10 feet or 1/2-inch maximum.
7. For faces of adjacent exposed masonry units, do not vary from flush alignment by more than 1/16 inch except due to warpage of masonry units within tolerances specified for warpage of units.

C. Joints:

1. For bed joints, do not vary from thickness indicated by more than plus or minus 1/8 inch, with a maximum thickness limited to 1/2 inch.
2. For exposed bed joints, do not vary from bed-joint thickness of adjacent courses by more than 1/8 inch.
3. For head and collar joints, do not vary from thickness indicated by more than plus 3/8 inch or minus 1/4 inch.
4. For exposed head joints, do not vary from thickness indicated by more than plus or minus 1/8 inch. Do not vary from adjacent bed-joint and head-joint thicknesses by more than 1/8 inch.
5. For exposed bed joints and head joints of stacked bond, do not vary from a straight line by more than 1/16 inch from one masonry unit to the next.

3.4 LAYING MASONRY WALLS

A. Lay out walls in advance for accurate spacing of surface bond patterns with uniform joint thicknesses and for accurate location of openings, movement-type joints, returns, and offsets. Avoid using less-than-half-size units, particularly at corners, jambs, and, where possible, at other locations.

B. Bond Pattern for Exposed Masonry: Unless otherwise indicated, lay exposed brick in 1/3 running bond, lay decorative CMU and stone in running bond. Do not use units with less-than-nominal 4-inch horizontal face dimensions at corners or jambs.

C. Lay concealed masonry with all units in a wythe in running bond or bonded by lapping not less than 4 inches. Bond and interlock each course of each wythe at corners. Do not use units with less-than-nominal 4-inch horizontal face dimensions at corners or jambs.

D. Stopping and Resuming Work: Stop work by stepping back units in each course from those in course below; do not tooth. When resuming work, clean masonry surfaces that are to receive mortar, remove loose masonry units and mortar, and wet brick if required before laying fresh masonry.

E. Built-in Work: As construction progresses, build in items specified in this and other Sections. Fill in solidly with masonry around built-in items.

F. Fill space between steel frames and masonry solidly with mortar unless otherwise indicated.

G. Where built-in items are to be embedded in cores of hollow masonry units, place a layer of metal lath, wire mesh, or plastic mesh in the joint below, and rod mortar or grout into core.

H. Fill cores in hollow CMUs with grout 24 inches under bearing plates, beams, lintels, posts, and similar items unless otherwise indicated.

I. Build nonload-bearing interior partitions full height of story to underside of solid floor or roof structure above unless otherwise indicated.

1. Install mineral wool in joint between top of partition and underside of structure above. Fill joint completely, cut edge smooth to be flush with face of wall.
2. Fasten partition top anchors to structure above and build into top of partition. Grout cells of CMUs solidly around plastic tubes of anchors and push tubes down into grout to provide 1/2-inch clearance between end of anchor rod and end of tube. Space anchors 48 inches o.c. unless otherwise indicated.
3. At fire-rated partitions, treat joint between top of partition and underside of structure above to comply with Section 078443 "Joint Firestopping."

3.5 MORTAR BEDDING AND JOINTING

A. Lay hollow brick and CMUs as follows:

1. Bed face shells in mortar and make head joints of depth equal to bed joints.
2. Bed webs in mortar in all courses of piers, columns, and pilasters.
3. Bed webs in mortar in grouted masonry, including starting course on footings.
4. Fully bed entire units, including areas under cells, at starting course on footings where cells are not grouted.

5. Fully bed units and fill cells with mortar at anchors and ties as needed to fully embed anchors and ties in mortar.

B. Lay solid masonry units and hollow brick with completely filled bed and head joints; butter ends with sufficient mortar to fill head joints and shove into place. Do not deeply furrow bed joints or slush head joints.

C. Tool exposed joints slightly concave when thumbprint hard, using a jointer larger than joint thickness unless otherwise indicated.

D. Cut joints flush for masonry walls to receive plaster or other direct-applied finishes (other than paint) unless otherwise indicated.

E. Rake out joints at perimeter of hollow metal door frames to a uniform depth of ¼" and fill with 2 part urethane sealant, in color selected by architect.

F. Cut joints flush where indicated to receive waterproofing or air barriers unless otherwise indicated.

3.6 CAVITY WALLS

A. Bond wythes of cavity walls together as follows:

1. Masonry-Joint Reinforcement: Installed in horizontal mortar joints.
   a. Where one wythe is of clay masonry and the other of concrete masonry, use adjustable-type (two-piece-type) reinforcement to allow for differential movement regardless of whether bed joints align.

B. Keep cavities clean of mortar droppings and other materials during construction. Bevel beds away from cavity, to minimize mortar protrusions into cavity. Do not attempt to trowel or remove mortar fins protruding into cavity.

C. Do not damage or remove the air barrier coating.

D. Installing Cavity Wall Insulation: Place small dabs of adhesive, spaced approximately 12 inches o.c. both ways, on inside face of insulation boards, or attach with plastic fasteners designed for this purpose. Fit courses of insulation between wall ties and other confining obstructions in cavity, with edges butted tightly both ways. Press units firmly against inside wythe of masonry or other construction as shown.

1. Fill cracks and open gaps in insulation with crack sealer compatible with insulation and masonry.

3.7 FLASHING, WEEP HOLES, AND CAVITY VENTS

A. General: Install embedded flashing and weep holes in masonry at shelf angles, lintels, ledges, other obstructions to downward flow of water in wall, and where indicated. Install cavity vents at top of walls, shelf angles, ledges, and other obstructions to upward flow of air in cavities, and where indicated.

B. Install flashing as follows unless otherwise indicated:

1. Prepare masonry surfaces so they are smooth and free from projections that could puncture flashing. Where flashing is within mortar joint, place through-wall flashing on sloping bed of mortar and cover with mortar. Before covering with mortar, seal penetrations in flashing with adhesive, sealant, or tape.
2. At masonry-veneer walls, extend flashing through veneer, across airspace behind veneer, and up face of sheathing at least 8 inches; with upper edge tucked under air barrier, lapping at least 4 inches. Fasten upper edge of flexible flashing to sheathing through termination bar and bead of sealant.
3. At lintels and shelf angles, extend flashing a minimum of 6 inches into masonry at each end. At heads and sills, extend flashing 6 inches at ends and turn up not less than 2 inches to form end dams.
4. Install metal drip edges beneath flexible flashing at exterior face of wall. Stop flexible flashing 1/2 inch back from outside face of wall, and adhere flexible flashing to top of metal drip edge.

C. Install reglets and nailers for flashing and other related construction where they are shown to be built into masonry.

D. Install weep holes in exterior wythes and veneers in head joints of first course of masonry immediately above embedded flashing.

1. Use specified weep/cavity vent products to form weep holes.
2. Space weep holes 24 inches o.c. unless otherwise indicated.

E. Place cavity drainage material in cavities to comply with configuration requirements for cavity drainage material in "Miscellaneous Masonry Accessories" Article.

F. Install cavity vents in head joints in exterior wythes at spacing indicated. Use specified weep/cavity vent products to form cavity vents.

3.8 MASONRY-JOINT REINFORCEMENT

A. General: Install entire length of longitudinal side rods in mortar with a minimum cover of 5/8 inch on exterior side of walls, 1/2 inch elsewhere. Lap reinforcement a minimum of 6 inches.

1. Space reinforcement not more than 16 inches o.c.
2. Space reinforcement not more than 8 inches o.c. in foundation walls and parapet walls.

3. Provide reinforcement not more than 8 inches above and below wall openings and extending 12 inches beyond openings.

B. Interrupt joint reinforcement at control and expansion joints unless otherwise indicated.

C. Provide continuity at wall intersections by using prefabricated T-shaped units.

D. Provide continuity at corners by using prefabricated L-shaped units.

E. Cut and bend reinforcing units as directed by manufacturer for continuity at corners, returns, offsets, column fireproofing, pipe enclosures, and other special conditions.

3.9 ANCHORING MASONRY TO STRUCTURAL STEEL AND CONCRETE

A. Anchor masonry to structural steel and concrete, where masonry abuts or faces structural steel or concrete, to comply with the following:

1. Provide an open space not less than 1/2 inch wide between masonry and structural steel or concrete unless otherwise indicated. Keep open space free of mortar and other rigid materials.
2. Anchor masonry with anchors embedded in masonry joints and attached to structure.
3. Space anchors as indicated, but not more than 24 inches o.c. vertically and 36 inches o.c. horizontally.
4. Masonry contractor to coordinate with Steel contractor for required locations.

3.10 CONTROL AND EXPANSION JOINTS

A. General: Install control- and expansion-joint materials in unit masonry as masonry progresses. Do not allow materials to span control and expansion joints without provision to allow for in-plane wall or partition movement.

B. Form control joints in concrete masonry as follows:
1. Install preformed control-joint gaskets designed to fit standard sash block.

C. Form expansion joints in brick as follows:
1. Form open joint full depth of brick wythe and of width indicated, but not less than 3/8 inch for installation of sealant and backer rod specified in Section 079200 "Joint Sealants."

3.11 LINTELS

A. Provide masonry lintels/bond beams where shown and where openings of more than 12 inches for brick-size units and 24 inches for block-size units are shown without structural steel or other supporting lintels.

B. Provide minimum bearing of 8 inches at each jamb unless otherwise indicated.

3.12 KNOX BOX

A. Install per manufacturer's instructions. Fasten securely to wall.

3.13 FLASHING, WEEP HOLES, AND CAVITY VENTS

A. General: Install embedded flashing and weep holes in masonry at shelf angles, lintels, ledges, other obstructions to downward flow of water in wall, and where indicated.

B. Install flashing as follows unless otherwise indicated:

1. Prepare masonry surfaces so they are smooth and free from projections that could puncture flashing. Where flashing is within mortar joint, place through-wall flashing on sloping bed of mortar and cover with mortar. Before covering with mortar, seal penetrations in flashing with adhesive, sealant, or tape.
2. At masonry-veneer walls, extend flashing through veneer, across airspace behind veneer, and up face of sheathing or CMU at least 8 inches; over lapping at least 4 inches. Fasten upper edge of flexible flashing to sheathing or CMU through termination bar. Provide sealant at top of termination bar. Sealant to be compatible with air barrier.
3. At lintels and shelf angles, extend flashing a minimum of 6 inches into masonry at each end. At heads and sills, extend flashing 6 inches at ends and turn up not less than 2 inches to form end dams.
4. Install metal drip edges beneath flexible flashing at exterior face of wall. Stop flexible flashing 1/2 inch back from outside face of wall, and adhere flexible flashing to top of metal drip edge.

C. Install reglets and nailers for flashing and other related construction where they are shown to be built into masonry.

D. Install weep holes in exterior wythes and veneers in head joints of first course of masonry immediately above embedded flashing.

1. Use specified weep/cavity vent products to form weep holes.
2. Space weep holes 24 inches o.c. unless otherwise indicated.

E. Place cavity drainage material in cavities to comply with configuration requirements for cavity drainage material in "Miscellaneous Masonry Accessories" Article.

F. Install cavity vents in head joints in exterior wythes at 24 inches o.c., near top of wall as indicated. Use specified weep/cavity vent products to form cavity vents.

3.14 REINFORCED UNIT MASONRY INSTALLATION

A. Temporary Formwork and Shores: Construct formwork and shores as needed to support reinforced masonry elements during construction.

1. Construct formwork to provide shape, line, and dimensions of completed masonry as indicated. Make forms sufficiently tight to prevent leakage of mortar and grout. Brace, tie, and support forms to maintain position and shape during construction and curing of reinforced masonry.
2. Do not remove forms and shores until reinforced masonry members have hardened sufficiently to carry their own weight and that of other loads that may be placed on them during construction.

B. Placing Reinforcement: Comply with requirements in TMS 602/ACI 530.1/ASCE 6.

C. Grouting: Do not place grout until entire height of masonry to be grouted has attained enough strength to resist grout pressure.

1. Comply with requirements in TMS 602/ACI 530.1/ASCE 6 for cleanouts and for grout placement, including minimum grout space and maximum pour height.
2. Limit height of vertical grout pours to not more than 60 inches.
3. In accordance with Section 040516.

3.15 SETTING CAST STONE IN MORTAR

A. Set cast stone as indicated on Drawings. Set units accurately in locations indicated, with edges and faces aligned according to established relationships and indicated tolerances.

1. Install anchors, supports, fasteners, and other attachments indicated or necessary to secure units in place.
2. Coordinate installation of cast stone with installation of flashing specified in other Sections.

B. Wet joint surfaces thoroughly before applying mortar or setting in mortar.

C. Set units in full bed of mortar with full head joints unless otherwise indicated.

1. Set units with joints 1/4 to 3/8 inch wide unless otherwise indicated.
2. Build anchors and ties into mortar joints as units are set.
3. Fill dowel holes and anchor slots with mortar.
4. Fill collar joints solid as units are set.
5. Build concealed flashing into mortar joints as units are set.

D. Tool exposed joints slightly concave when thumbprint hard. Use a smooth plastic jointer larger than joint thickness.

3.16 FIELD QUALITY CONTROL

A. Testing and Inspecting: Owner will engage special inspectors to perform tests and inspections and prepare reports. Allow inspectors access to scaffolding and work areas as needed to perform tests and inspections. Retesting of materials that fail to comply with specified requirements shall be done at Contractor's expense.

B. Inspections: Special inspections according to Level B in TMS 402/ACI 530/ASCE 6, Section 1.6.A Tables 3,4 and 5.

1. Begin masonry construction only after inspectors have verified proportions of site-prepared mortar.
2. Place grout only after inspectors have verified compliance of grout spaces and of grades, sizes, and locations of reinforcement.
3. Place grout only after inspectors have verified proportions of site-prepared grout.

C. Testing Prior to Construction: One set of tests.

D. Testing Frequency: One set of tests for each 2000 sq. ft. of wall area or portion thereof.

E. Mortar Test (Property Specification): For each mix provided, according to ASTM C 780. Test mortar for compressive strength.

F. Grout Test (Compressive Strength): For each mix provided, according to ASTM C 1019.

G. Independent Testing Laboratory shall provide the following testing:
1. Perform testing in accordance with Section 01 45 29.
2. Reinforcing in accordance with Section 03 30 50.
3. Compressive Strength of Masonry Units: Test in accordance with ASTM C140.

H. Owner’s Representative will provide the following inspections:
1. Review certificates of compliance and samples of materials proposed for use.
2. Reinforcing in accordance with Section 03 30 50.
3. Hot and cold weather construction procedures.
4. Placement of masonry units and construction of mortar joints.
5. Placement of all embedded items.

3.17 REPAIRING, POINTING, AND CLEANING

A. Remove and replace masonry units that are loose, chipped, broken, stained, or otherwise damaged or that do not match adjoining units. Install new units to match adjoining units; install in fresh mortar, pointed to eliminate evidence of replacement.

B. Pointing: During the tooling of joints, enlarge voids and holes, except weep holes, and completely fill with mortar. Point up joints, including corners, openings, and adjacent

construction, to provide a neat, uniform appearance. Prepare joints for sealant application, where indicated.

C. In-Progress Cleaning: Clean unit masonry as work progresses by dry brushing to remove mortar fins and smears before tooling joints.
   1. Contractor to provide written confirmation that cleaning procedures for decorative units were reviewed with the unit manufacturer prior to installation of any decorative units; and that the contractor and all installers are fully aware of the procedures. Improper cleaning that causes damage to the decorative units will result in the entire wall or section of wall between control joints to be removed and replaced.

D. Final Cleaning: After mortar is thoroughly set and cured, clean exposed masonry as follows:

   1. Remove large mortar particles by hand with wooden paddles and nonmetallic scrape hoes or chisels.
   2. Protect adjacent stone and nonmasonry surfaces from contact with cleaner by covering them with liquid strippable masking agent or polyethylene film and waterproof masking tape.
   3. Wet wall surfaces with water before applying cleaners; remove cleaners promptly by rinsing surfaces thoroughly with clear water.
   4. Clean concrete masonry by applicable cleaning methods indicated in NCMA TEK 8-4A.
   5. Clean masonry with a proprietary acidic cleaner applied according to manufacturer's written instructions.

END OF SECTION 042000

SECTION 043000 - CONCRETE UNIT MASONRY

PART 1 - GENERAL

1.1 SUMMARY

A. Section Includes
   1. Concrete masonry units.
   2. Prefaced concrete masonry units.

B. Related Sections
   1. Section 032000 - Concrete Reinforcing.
   2. Section 040513 - Masonry Mortaring.
   3. Section 040516 - Masonry Grouting.

1.2 REFERENCES

A. For all references, use edition referenced by the 2022 edition of the California Building Code. If no edition is referenced, use latest edition.

B. 2022 California Building Code (CBC), with local amendments, if any.

C. ACI 530/ASCE 5/TMS 402- Building Code Requirements for Masonry Structures.

D. ACI 530.1/ASCE 6/TMS 602- Specifications for Masonry Structures.

E. ASTM A153- Zinc Coating (Hot-Dip) on Iron and Steel Hardware.

F. ASTM A951- Steel Wire for Masonry Joint Reinforcement.

G. ASTM B227- Hard-Drawn Copper-Clad Steel Wire.

H. ASTM C90- Loadbearing Concrete Masonry Units.

I. ASTM C140- Test Methods for Sampling and Testing Concrete Masonry Units.

J. ASTM C1314- Test Method for Compressive Strength of Masonry Prism.

1.3 SUBMITTALS

A. Submit in accordance with Section 013300 and 013323.

B. Shop Drawings: Indicate locations and details of proposed construction and control joints.

C. Product Data
   1. Product data for products and materials indicated.
   2. Manufacturer’s technical bulletins and installation/application instructions.

3. Material Safety Data Sheets (MSDS).

D. Samples
1. Submit two, 6-inch long samples of expansion/contraction joint and control joint.
2. Submit four samples of prefaced units to illustrate color, texture and extremes of color range.

E. Certificates
Manufacturer's Certificate: Certify that products meet or exceed specified requirements.

F. Qualification Data
1. Manufacturer Qualifications.
2. Installer Qualifications.

1.4 QUALIFICATIONS

A. Manufacturer: Company with minimum five years' experience in the manufacture of products of the type specified in this Section.

B. Installer: Company specializing in performing the Work of this Section with minimum five years' experience.

1.5 COORDINATION

A. Coordinate the installation of items to be embedded in masonry and provide openings in the masonry necessary for performance of the Work of other Sections.

B. Coordinate the placement of joint devices.

C. Request schedules of items specified under other Sections, but installed under this Section, in addition to templates, template dimensions, and shop drawings required for the installation of those items.

1.6 MOCK-UP AND FIELD SAMPLES

A. Provide in accordance with Section 014500.

B. Construct and erect a field sample as follows:
1. At the requested by the Owner's Representative.

C. Sample Panel Requirements
1. Sufficient size, minimum 3 x 4-foot panel, to indicate finished product.
2. Located as directed by the Owner's Representative.
3. Approved sample may remain as part of the Work.

D. Approved sample panel is considered basis of quality for the finished Work. Keep sample panel exposed to view for duration of Work.

1.7 DELIVERY, STORAGE, AND HANDLING

A. Deliver, store, and handle masonry units in accordance with manufacturer's written recommendations.

B. Store materials subject to damage by dirt and moisture in a clean, dry location, off the ground, and suitably protected.

PART 2 - PRODUCTS

2.1 MATERIALS

A. Hollow-Unit Masonry
   1. ASTM C90, Grade N, Type I - Moisture Controlled; Medium weight.
   2. Compressive Strength: 1500 psi minimum.
   3. Nominal modular face size of 8 x 16 inches.
   4. Provide special units for 90 degree corners, bond beams, lintels, coved base, bullnosed corners, and other shapes shown or required.
   5. Provide plain smooth face finish.

2.2 ACCESSORIES

A. Reinforcing Steel: In accordance with Section 032000.

B. Mortar: In accordance with Section 040513.

C. Pointing Mortar: In accordance with Section 040513.

D. Grout: In accordance with Section 040516

E. Anchors
   1. Steel, zinc coated in accordance with ASTM A153, or copper-coated steel wire in accordance with ASTM B227, Grade 30 HS.

F. Preformed Control Joints: Rubber, Neoprene, or Polyvinylchloride material; section capable of transmitting shear across joint. Provide with corner and tee accessories, fused joints.

G. Formboard: Rigid fiberglass insulation board; nominal density 12 pcf.

H. Cleaning Solutions: Nonacidic, not harmful to masonry work or adjacent materials.

PART 3 - EXECUTION

3.1 EXAMINATION

A. Verify that field conditions are acceptable and are ready to receive the Work. Notify the Owner's Representative, in writing, of any conditions requiring corrective action.

B. If unsatisfactory conditions exist, do not commence the installation until such conditions have been corrected. Beginning installation means acceptance of existing conditions.

3.2 PREPARATION

A. Ensure items to be embedded, templates required for anchors, and other items are available, and locations are coordinated prior to commencing the Work.

3.3 LAYOUT AND COURSING

A. Lay concrete masonry units in running bond. Course one unit and one mortar joint to equal 8 inches.

B. Establish lines, levels, and coursing indicated. Protect from displacement.

C. Maintain masonry courses to uniform dimension. Form vertical and horizontal joints of uniform thickness.

D. Lay out wall to establish accurate spacing of bond pattern. Arrange units in a manner which will result in a minimum amount of cutting of units.

E. Bond intersecting walls to each other in every other course, unless otherwise indicated. Toothing is not allowed.

F. Lay masonry units with cells vertically aligned, clear of mortar, and unobstructed.

3.4 REINFORCING

A. Install in accordance with the Drawings, approved shop drawings, Section 032000, and as follows:
   1. Place vertical and horizontal reinforcement.
   2. Retain vertical reinforcement in position at top and bottom of cells and at intervals not exceeding 192 bar diameters.
   3. Splice reinforcement as indicated. Provide minimum lap of 48 bar diameters or per ACI 530.
   4. Vertical reinforcing shall be continuous with dowels cast into surrounding reinforced concrete construction.

3.5 PLACING AND BONDING

A. Masonry units may be damp but shall be free from excessive moisture which would adversely affect proper mortar bond.

B. Lay masonry units in full bed of mortar, with full head and bed joints, including webs in hollow units, uniformly jointed with other Work.

C. Mortar Joints

1. Form mortar joints flush where masonry is indicated to receive veneer plaster or ceramic tile.
2. Rake out joints where sealant or pointing mortar is indicated.
3. Form mortar joints concave where not otherwise indicated.
4. Buttering corners of joints or excessive furrowing of mortar joints are not permitted.

D. Do not shift or tap masonry units after mortar has achieved initial set. Where adjustment must be made, remove mortar and replace.

E. Where fresh masonry joins masonry that is partially or totally set, clean and lightly wet the contact surface of the set masonry. Remove loose mortar.

F. Remove excess mortar as the Work progresses.

G. Perform jobsite cutting of masonry units with proper tools to provide straight, clean, unchipped edges. Hand cutting and chipping is not permitted. Prevent broken masonry unit corners or edges.

H. Cut and fit for chases, pipes, conduit, sleeves, grounds and other penetrations. Coordinate with other Sections of Work to provide correct size, shape, and location.

I. Obtain the Owner's Representative approval prior to cutting or fitting masonry work not indicated or where appearance or strength of masonry work may be impaired.

J. Isolate masonry partitions as indicated from vertical structural framing members with a control joint.

K. Isolate top joint of masonry partitions as indicated from horizontal structural framing members and slabs or decks with mineral fiber firestopping material under provisions of Section 078400.

L. Provide temporary bracing during installation of the Work. Maintain in place until building structure provides permanent bracing.

3.6 LINTELS

A. Install lintels over openings as detailed.

B. Construct masonry lintels from bond beam units without solid bottoms, reinforced with bars, and filled with grout. Surface texture and joint pattern shall match the adjoining concrete masonry units.

C. Use single piece reinforcing bars only.

D. Allow masonry lintels to attain specified strength before removing temporary supports.

E. Maintain minimum 8-inch bearing on each side of opening.

3.7 CONTROL AND EXPANSION JOINTS

A. Chord reinforcing shall be continuous through control joints, unless otherwise indicated. Other horizontal reinforcing shall terminate at each side of control and expansion joints.

B. Install preformed control joint device in continuous lengths. Seal butt and corner joints in accordance with manufacturer's instructions.

C. Size control joint in accordance with Section 079000 for sealant performance.

D. Form expansion joint as detailed.

3.8 GROUTING

A. In accordance with Section 04 05 16.

3.9 FINISHES

A. Pointing
   1. Rake out joints in prefaced masonry units to depth of 1/4 inch.
   2. Install pointing mortar in accordance with manufacturer's instructions to a slightly concave surface.
   3. Finished joints shall be smooth and cleanable.

B. Surfaces of masonry to receive flashing shall be smooth and free from projections.

3.10 TOLERANCES

A. Unit to Adjacent Unit: 1/32 inch.

B. Plane of Wall: 1/4 inch in 10 feet and 1/2 inch in 20 feet or more.

C. Plumbness: 1/4 inch per story noncumulative; 1/2 inch in two stories or more.

D. Variation from Level Coursing: 1/8 inch in 3 feet; 1/4 inch in 10 feet; 1/2 inch in 30 feet.

E. Variation in Joint Thickness: 1/8 inch in 3 feet.

F. Cross Sectional Thickness of Walls: 1/4 inch.

G. Variation from Dimensioned Position of Reinforcement: 1/2 inch.

3.11 FIELD QUALITY CONTROL

A. Maintain materials and surrounding air temperatures to minimum 40 degrees F prior to, during, and 48 hours after completion of Work.

B. Construct masonry during cold weather in accordance with TMS 402/ACI 530/ASCE 6, ART 1.8C.

C. Construct masonry during hot weather in accordance with TMS 402/ACI 530/ASCE 6, ART 1.8D.

3.12 TESTING AND INSPECTION

D. Testing and inspection shall be in accordance with TMS 402/ACI 530/ASCE 6, Section 1.6 A Tables 3,4 and 5.

A. Independent Testing Laboratory shall provide the following testing:
   1. Perform testing in accordance with Section 014529.
   2. Reinforcing in accordance with Section 033050.
   3. Compressive Strength of Masonry Units: Test in accordance with ASTM C140.

B. Owner's Representative will provide the following inspections:
   1. Review certificates of compliance and samples of materials proposed for use.
   2. Reinforcing in accordance with Section 033050.
   3. Hot and cold weather construction procedures.
   4. Placement of masonry units and construction of mortar joints.
   5. Placement of all embedded items.

3.13 CLEANING

A. Before closing up pipe spaces or similar inaccessible areas or shafts with masonry, remove rubbish and sweep out the area to be enclosed.

B. Clean soiled surfaces with cleaning solution of type recommended by masonry unit manufacturer.

C. Use nonmetallic tools in cleaning operations.

3.14 DEFECTIVE WORK

A. Masonry not conforming to required lines, details, dimensions, tolerances, finishes, strength, or other specified requirements shall be considered defective. Notify the Owner's Representative upon discovery of these conditions.

B. Required repair or replacement of defective masonry will be determined by the Owner's Representative.

C. Do not patch, fill, touch-up, repair, or replace masonry except upon express direction of the Owner's Representative for each individual area.

D. Defective masonry shall be repaired or replaced as recommended by the Owner's Representative at no additional expense to the Owner.

3.15 PROTECTION

A. As the Work progresses upwards, provide suitable coverings to protect mortar and grout from direct exposure to sun and rain. Maintain as long as necessary to develop proper hydration of cement.

B. When the Work is not in progress, keep tops of walls covered with securely anchored, nonstaining, waterproof covering overhanging minimum 2 feet on each side.

C. Protect masonry from damage from subsequent construction operations.

D. Without damaging the completed Work, provide protective boards at exposed external corners which may be damaged by construction activities.

END OF SECTION 043000

SECTION 047200 - CAST STONE MASONRY

PART 1 - GENERAL

1.1 SUMMARY

A. Section Includes:

1. Wall panels.
2. Trim units.
3. Decorative elements.

B. Related Requirements:

1. Section 034500 "Precast Architectural Concrete."

1.2 ACTION SUBMITTALS

A. Product Data: For each type of product.

1. For cast stone units, include construction details, material descriptions, dimensions of individual components and profiles, and finishes.

B. Shop Drawings: Show fabrication and installation details for cast stone units. Include dimensions, details of reinforcement and anchorages if any, and indication of finished faces.

1. Include building elevations showing layout of units and locations of joints and anchors.

C. Samples for Initial Selection: For colored mortar.

D. Samples for Verification:

1. For each color and texture of cast stone required, [**4 inches square**]<**Insert dimension**> in size.
2. For each trim shape required, [**4 inches**]<**Insert dimension**> in length.
3. For colored mortar, make Samples using same sand and mortar ingredients to be used on Project.[**Label Samples to indicate types and amounts of pigments used.**]

E. Full-Size Samples: For each [**color**][**texture**][**engraving**][**and**][**shape**] of cast stone unit required.

1. Make available for Architect's review at Project site[**or at manufacturing plant, if acceptable to Architect**].
2. Make Samples from materials to be used for units used on Project[**immediately before beginning production of units for Project**].
3. Approved Samples may be installed in the Work.

1.3 INFORMATIONAL SUBMITTALS

A. Qualification Data: For [**manufacturer**][**and**][**testing agency**].

1. Include copies of material test reports, indicating compliance of cast stone with ASTM C1364.

B. Material Test Reports: For each mix required to produce cast stone, based on testing according to ASTM C1364.

1. Provide test reports based on testing within previous six months.

1.4 QUALITY ASSURANCE

A. Manufacturer Qualifications: A qualified manufacturer of cast stone units similar to those indicated for this Project, that has sufficient production capacity to manufacture required units, and is a plant certified by [**CSI**][**or**][**APA**][**or**][**PCI for Group A, Category AT**].

B. Furnish cast stone for installation in mockups specified in [**Section 042000 "Unit Masonry."**][**Section 042613 "Masonry Veneer."**]

C. Mockups: Build mockups to verify selections made under Sample submittals and to demonstrate aesthetic effects[**and to set quality standards for materials and execution**].

1. Build mockup for <**Insert description**> installation[**including accessories**].

a. Size: <**Insert dimension**>[**As indicated on Drawings**].

2. Approval of mockups does not constitute approval of deviations from the Contract Documents contained in mockups unless Architect specifically approves such deviations in writing.
3. Subject to compliance with requirements, approved mockups may become part of the completed Work if undisturbed at time of Substantial Completion.

1.5 DELIVERY, STORAGE, AND HANDLING

A. Coordinate delivery of cast stone[**with unit masonry work**] to avoid delaying the Work[**and to minimize the need for on-site storage**].

B. Pack, handle, and ship cast stone units in suitable packs or pallets.

1. Lift with wide-belt slings; do not use wire rope or ropes that might cause staining. Move cast stone units if required, using dollies with wood supports.
2. Store cast stone units on wood skids or pallets with nonstaining, waterproof covers, securely tied. Arrange to distribute weight evenly and to prevent damage to units. Ventilate under covers to prevent condensation.

C. Store cementitious materials on elevated platforms, under cover, and in a dry location. Do not use cementitious materials that have become damp.

D. Store mortar aggregates where grading and other required characteristics can be maintained and contamination can be avoided.

1.6 PROJECT CONDITIONS

A. Cold-Weather Requirements: Do not use frozen materials or materials mixed or coated with ice or frost. Do not build on frozen substrates. Comply with cold-weather construction requirements in TMS 602.

1. Cold-Weather Cleaning: Use liquid cleaning methods only when air temperature is **40 deg F** and above and will remain so until cast stone has dried, but no fewer than seven days after completing cleaning.

B. Hot-Weather Requirements: Comply with hot-weather construction requirements in TMS 602.

PART 2 - PRODUCTS

2.1 SOURCE LIMITATIONS

A. Source Limitations for Cast Stone: Obtain cast stone units from single source from single manufacturer.

2.2 CAST STONE MATERIALS

A. General: Comply with ASTM C1364.

B. Admixtures: Use only admixtures specified or approved in writing by Architect.

1. Do not use admixtures that contain more than 0.1 percent water-soluble chloride ions by mass of cementitious materials. Do not use admixtures containing calcium chloride.
2. Use only admixtures that are certified by manufacturer to be compatible with cement and other admixtures used.
3. Water-Reducing Admixture: ASTM C494/C494M, Type A.
4. Water-Reducing, Retarding Admixture: ASTM C494/C494M, Type D.
5. Water-Reducing, Accelerating Admixture: ASTM C494/C494M, Type E.

C. Reinforcement:

1. Deformed steel bars complying with ASTM A615/A615M, **Grade 40**. Use galvanized or epoxy-coated reinforcement when covered with less than **1-1/2 inches** of cast stone material.

a. Epoxy Coating: ASTM A775/A775M.
b. Galvanized Coating: ASTM A767/A767M.

2. Galvanized-Steel, Welded-Wire Reinforcement: ASTM A1064/A1064M, plain, fabricated from galvanized-steel wire into flat sheets.

D. Embedded Anchors and Other Inserts: Fabricated from stainless steel complying with ASTM A240/A240M, ASTM A276/A276M, or ASTM A666, Type 304.

2.3 MORTAR MATERIALS

A. Provide mortar materials that comply with Section 042000 "Unit Masonry."

B. Portland Cement: ASTM C150/C150M, Type I or II, except Type III may be used for cold-weather construction. Provide natural color or white cement as required to produce mortar color indicated.

C. Hydrated Lime: ASTM C207, Type S.

D. Portland Cement-Lime Mix: Packaged blend of portland cement and hydrated lime containing no other ingredients.

E. Preblended Dry Mortar Mix: Packaged blend made from portland cement and hydrated lime, sand, and admixtures and complying with ASTM C1714/C1714M.

F. Aggregate for Mortar: ASTM C144.

1. For mortar that is exposed to view, use washed aggregate consisting of natural sand or crushed stone.
2. For joints less than **1/4 inch** thick, use aggregate graded with 100 percent passing the **No. 16** sieve.

G. Water: Potable.

2.4 ACCESSORIES

A. Anchors: Type and size indicated, fabricated from Type 304 stainless steel complying with ASTM A240/A240M, ASTM A276/A276M, or ASTM A666.

B. Dowels: **1/2-inch-** diameter round bars, fabricated from Type 304 stainless steel complying with ASTM A240/A240M, ASTM A276/A276M, or ASTM A666.

2.5 MORTAR MIXES

A. Comply with requirements in Section 042000 "Unit Masonry" for mortar mixes.

B. Do not use admixtures including pigments, air-entraining agents, accelerators, retarders, water-repellent agents, antifreeze compounds, or other admixtures unless otherwise indicated.

1. Do not use calcium chloride in mortar or grout.
2. Use portland cement-lime mortar unless otherwise indicated.

C. Comply with ASTM C270, Proportion Specification.

1. For setting mortar, use Type N.
2. For pointing mortar, use Type N.

PART 3 - EXECUTION

3.1 EXAMINATION

A. Examine substrates and conditions, with Installer present, for compliance with requirements for installation tolerances and other conditions affecting performance of the Work.

B. Proceed with installation only after unsatisfactory conditions have been corrected.

3.2 SETTING CAST STONE IN MORTAR

A. Set cast stone as indicated in TMS 604.

B. Install cast stone units to comply with requirements in [**Section 042000 "Unit Masonry."**][**Section 042613 "Masonry Veneer."**]

C. Set cast stone as indicated on Drawings. Set units accurately in locations indicated, with edges and faces aligned according to established relationships and indicated tolerances.

1. Install anchors, supports, fasteners, and other attachments indicated or necessary to secure units in place.
2. Coordinate installation of cast stone with installation of flashing specified in other Sections.

D. Wet joint surfaces thoroughly before applying mortar or setting in mortar.

E. Set units in full bed of mortar with full head joints unless otherwise indicated.

1. Set units with joints [**1/4 to 3/8 inch**][**3/8 to 1/2 inch**]<**Insert dimension**> wide unless otherwise indicated.
2. Build anchors and ties into mortar joints as units are set.
3. Fill dowel holes and anchor slots with mortar.
4. Fill collar joints solid as units are set.
5. Build concealed flashing into mortar joints as units are set.
6. Keep head joints in copings and between other units with exposed horizontal surfaces open to receive sealant.
7. Keep joints at shelf angles open to receive sealant.

F. Rake out joints for pointing with mortar to depths of not less than **3/4 inch**. Rake joints to uniform depths with square bottoms and clean sides. Scrub faces of units to remove excess mortar as joints are raked.

G. Point mortar joints by placing and compacting mortar in layers not greater than **3/8 inch**. Compact each layer thoroughly and allow it to become thumbprint hard before applying next layer.

H. Tool exposed joints slightly concave when thumbprint hard. Use a smooth plastic jointer larger than joint thickness.

I. Rake out joints for pointing with sealant to depths of not less than **3/4 inch**. Scrub faces of units to remove excess mortar as joints are raked.

J. Point joints with sealant to comply with applicable requirements in Section 079200 "Joint Sealants."

1. Prime cast stone surfaces to receive sealant and install compressible backer rod in joints before applying sealant unless otherwise indicated.

K. Provide sealant joints at head joints of copings and other horizontal surfaces; at expansion, control, and pressure-relieving joints; and at locations indicated.

1. Keep joints free of mortar and other rigid materials.
2. Build in compressible foam-plastic joint fillers where indicated.
3. Form joint of width indicated, but not less than [**3/8 inch**][**1/2 inch**]<**Insert dimension**>.
4. Prime cast stone surfaces to receive sealant and install compressible backer rod in joints before applying sealant unless otherwise indicated.
5. Prepare and apply sealant of type and at locations indicated to comply with applicable requirements in Section 079200 "Joint Sealants."

3.3 SETTING ANCHORED CAST STONE WITH SEALANT-FILLED JOINTS

A. Set cast stone as indicated in TMS 604.

B. Set cast stone as indicated on Drawings. Set units accurately in locations indicated, with edges and faces aligned according to established relationships and indicated tolerances.

1. Install anchors, supports, fasteners, and other attachments indicated or necessary to secure units in place.
2. Shim and adjust anchors, supports, and accessories to set cast stone in locations indicated with uniform joints.

C. Keep cavities open where unfilled space is indicated between back of cast stone units and backup wall; do not fill cavities with mortar or grout.

D. Fill anchor holes with sealant.

1. Where dowel holes occur at pressure-relieving joints, provide compressible material at ends of dowels.

E. Set cast stone supported on clip or continuous angles on resilient setting shims. Use material of thickness required to maintain uniform joint widths. Hold shims back from face of cast stone a distance at least equal to width of joint.

F. Keep joints free of mortar and other rigid materials. Remove temporary shims and spacers from joints after anchors and supports are secured in place and cast stone units are anchored. Do not begin sealant installation until temporary shims and spacers are removed.

1. Form open joint of width indicated, but not less than [**3/8 inch**][**1/2 inch**]<**Insert dimension**>.

G. Prime cast stone surfaces to receive sealant and install compressible backer rod in joints before applying sealant unless otherwise indicated.

H. Prepare and apply sealant of type and at locations indicated to comply with applicable requirements in Section 079200 "Joint Sealants."

3.4 INSTALLATION TOLERANCES

A. Variation from Plumb: Do not exceed [**1/4 inch in 10 ft.**][**1/8 inch in 10 ft.**], [**3/8 inch in 20 ft.**][**1/4 inch in 20 ft.**], or **1/2 inch** maximum.

B. Variation from Level: Do not exceed [**1/4 inch in 10 ft.**][**1/8 inch in 10 ft.**], [**3/8 inch in 20 ft.**][**1/4 inch in 20 ft.**], or **1/2 inch** maximum.

C. Variation in Joint Width: Do not vary joint thickness more than **1/8 inch in 36 inches** or one-fourth of nominal joint width, whichever is less.

D. Variation in Plane between Adjacent Surfaces (Lipping): Do not vary from flush alignment with adjacent units or adjacent surfaces indicated to be flush with units by more than **1/16 inch**, except where variation is due to warpage of units within tolerances specified.

3.5 ADJUSTING AND CLEANING

A. Remove and replace stained and otherwise damaged units and units not matching approved Samples. Cast stone may be repaired if methods and results are approved by Architect.

B. Replace units in a manner that results in cast stone matching approved Samples, complying with other requirements, and showing no evidence of replacement.

C. In-Progress Cleaning: Clean cast stone as work progresses.

1. Remove mortar fins and smears before tooling joints.
2. Remove excess sealant immediately, including spills, smears, and spatter.

D. Final Cleaning: After mortar is thoroughly set and cured, clean exposed cast stone as follows:

1. Remove large mortar particles by hand with wooden paddles and nonmetallic scrape hoes or chisels.
2. Test cleaning methods on sample; leave one sample uncleaned for comparison purposes. Obtain Architect's approval of sample cleaning before proceeding with cleaning of cast stone.
3. Protect adjacent surfaces from contact with cleaner by covering them with liquid strippable masking agent or polyethylene film and waterproof masking tape.
4. Wet surfaces with water before applying cleaners; remove cleaners promptly by rinsing thoroughly with clear water.
5. Clean cast stone by methods described in Cast Stone Institute Technical Bulletin #39.

6. Clean cast stone with proprietary acidic cleaner applied according to manufacturer's written instructions.

END OF SECTION 047200

SECTION 05 05 53 – TAMPER PROOF METAL FASTENERS

PART 1 - GENERAL

1.1 RELATED DOCUMENTS

A. Drawings and general provisions of the Contract, including General and Supplementary Conditions and Division 01 Specification Sections, apply to this Section.

1.2 SUMMARY

A. Section Includes:

1. Tamper proof metal fasteners.
2. Accessories.

B. Related Requirements:

1. Division 05 for Metals
2. Division 08 for Openings
3. Division 09 for Finishes
4. Division 10 for Specialties
5. Division 11 for Equipment
6. Division 12 for Furnishings
7. Division 13 for Special Construction
8. Division 14 for Conveying Equipment
9. Division 21 for Fire Suppression
10. Division 22 for Plumbing
11. Division 23 for Heating, Ventilating, and Air-Conditioning (HVAC)
12. Division 25 for Integrated Automation
13. Division 26 for Electrical
14. Division 27 for Communications
15. Division 28 for Electronic Safety and Security

1.3 SUBMITTALS

A. Product Data: For each type of product.

1.4 DELIVERY, STORAGE AND HANDLING

A. Deliver, store and handle per manufacturer's requirements.

PART 2 - PRODUCT

2.1 SOURCES

A. Security Screws may be obtained through the following dealers:

1. Bryce Fastener Company, Inc.; Gilbert, AZ
2. Camcar Division of Textron, Inc.; Rockford, IL
3. Safety Socket Screw Corporation; Chicago, IL
4. Sentry Security Fasteners, Inc.; Peoria, IL
5. Tamper-Pruf Screws, Inc.; Paramount, CA
6. Tanner Bolt & Nut Corporation; Brooklyn, NY

2.2 TAMPER PROOF METAL FASTENERS

A. Exposed Security Fasteners:

1. Torx-head #12AB x 2” Tamper-Proof Security Self-Drilling Screw – Pan 6 Lobe Head - (star design with center pin) security fasteners.
2. 12” maximum spacing.
3. Finish shall match that specified of the item anchored.

B. Expansion Anchors:

1. Structural concrete or masonry stud anchors similar to Hilti Qwik-Bolt or equal.
2. Provide with non-removable nuts or twist-off nuts.

C. Fabrication:

1. Fabricate removable tamper proof fasteners to allow removal only by tools produced by fastener manufacturer or other licensed fabricator specifically for individual tamper proof fastener design.
2. Plating: Cadmium, zinc, nickel, phosphate and chrome to match adjacent materials.
3. Limit size and shape variations such that no more than six (6) different tools are required for each type of tamper proof fastener used on project.

2.3 ACCESSORIES

A. Screw-thread Adhesive Sealant:

1. Products:

a. Loctite No. 271
b. Permatex Permanent Strength Threadlock Red
c. J-B Weld 27113 Perma-Lock Threadlocker

PART 3 - EXECUTION

3.1 LOCATIONS

A. Provide tamper proof metal fasteners to work under the General, Mechanical, and Electrical Contracts. This shall include fasteners for equipment, furnishings, fixtures, doors, windows, exposed structural connections, attachments and hardware.

B. Tamper proof metal fasteners shall be used for fastenings, except in the following areas:

1. Administration and Staff areas.
2. Mechanical and electrical rooms.
3. Areas above suspended ceilings, behind access panels and within pipe and duct chases.

3.2 INSTALLATION

A. Install work using proper sized tamper proof fastener, matched to configuration, structural loading, and size.

B. Install fasteners with the proper amount of torque as recommended by the manufacturer.

C. Set tamper proof fasteners with screw thread adhesive sealant in accordance with manufacturer's instructions.

D. Store and maintain inventory control for each installing tool used for installation of security fasteners. After use, installers shall return tools for inventory control. At completion of the project, installing tools shall be turned over to the facility.

3.3 SPARE PARTS

A. Provide five (5) security fastener kits to the Owner. Kits shall contain all fasteners found on project and a tool with bits.

END OF SECTION 05 05 53

SECTION 051200 - STRUCTURAL STEEL FRAMING

PART 1 GENERAL

1.1 SUMMARY

A. Section Includes
1. Fabrication and erection of structural steel framing members.

B. Related Sections
1. Section 018113 - Sustainable Design Requirements.
2. Section 036000 - Grouting
3. Section 050555 - Tamper Proof Metal Fastenings.
4. Section 053000 - Metal Decking.
5. Section 055000 - Metal Fabrications.
6. Section 055050 - Detention Metal Fabrications.
7. Section 055100 - Metal Stairs.
8. Section 055200 - Metal Railings.
9. Section 078100 - Applied Fireproofing.
10. Section 099000 - Painting and Coating.

1.2 REFERENCES

A. For all references, use edition referenced by the 2022 edition of the California Building Code. If no edition is referenced, use latest edition.

B. 2022 California Building Code (CBC), with local amendments, if any.

C. AISC - Manual of Steel Construction.

D. ANSI B18.22.1- Plain Washers.

E. ANSI B18.23.1- Beveled Washers.

F. ASTM A36- Carbon Structural Steel.

G. ASTM A53- Pipe, Steel, Black and Hot-Dipped Zinc-Coated Welded and Seamless.

H. ASTM A108- Steel Bar, Carbon and Alloy, Cold-Finished.

I. ASTM A123- Zinc (Hot Dipped Galvanized) Coatings on Iron and Steel Products.

J. ASTM A153- Zinc Coating (Hot Dip) on Iron and Steel Hardware.

K. ASTM A307- Carbon Steel Bolts and Studs, 60,000-psi Tensile Strength.

L. ASTM A325- Structural Bolts, Steel, Heat Treated, 120/105 KSI Minimum Tensile Strength.

M. ASTM A449- Hex Cap Screws, Bolts, and Studs, Steel, Heat Treated, 120/105/90 ksi Minimum Tensile Strength, General Use.

N. ASTM A490- Structural Bolts, Alloy Steel, Heat Treated, 150 KSI Minimum Tensile Strength.

O. ASTM A500- Cold-Formed Welded and Seamless Carbon Steel Structural Tubing in Round and Shapes.

P. ASTM A501- Hot-Formed Welded and Seamless Carbon Steel Structural Tubing.

Q. ASTM A572- High Strength Low Alloy Columbium-Vanadium Structural Steel.

R. ASTM A992- Structural Steel Shapes.

S. ASTM F1554- Anchor Bolts, Steel, 36, 55, and 105-ksi Yield Strength.

T. American Welding Society:
1. "Structural Welding Code -- Steel" (AWS D1.1).
2. "Standard Symbols for Welding, Brazing and Nondestructive Examination (AWS A2.4).
3. "Filler Metal Specifications" (AWS A5).
4. "Criteria for Describing Oxygen-Cut Surfaces and Oxygen Cutting Surface Roughness Gauge" (AWS C4.1).
5. "Standard for AWS Certification of Welding Inspectors" (AWS QC1).
6. "Seismic Welding Supplement" (AWS D1.8).

U. SSPC - Society for Protective Coatings: Painting Manuals Volume 1 and 2.

V. American Society of Non-Destructive Testing:
1. ASNT Standard for Qualification and Certification of Nondestructive Testing Personnel (ANSI/ASNT CP-189).
2. Personnel Qualification and Certification in Nondestructive Testing (ASNT Recommended Practice No. SNT-TC-1A).

1.3 SUBMITTALS

A. Submit in accordance with Section 013300.

B. Shop Drawings
1. Indicate markings, quantities, materials, and shapes.
2. Indicate profiles, cambers, dimensions, spacing, and locations.
3. Indicate openings, cuts, and holes.
4. Indicate attachments, connections, threaded fasteners, rivets, and welds, including methods of connecting, anchoring, fastening, bracing, and attachment to the Work of other Sections.
5. Indicate shop and erection details.
6. Indicate shop and field welds by welding symbols in accordance with AWS A2.4.
7. Indicate net weld lengths.

C. Written Welding Procedures

D. Product Data
1. Product data for products and materials indicated.
2. Manufacturer's technical bulletins and installation/application instructions.
3. Material Safety Data Sheets (MSDS).

E. Certificates
   1. Manufacturer's Mill Certificate: Submit certificate that products meet or exceed specified requirements.
   2. Mill Test Reports: Submit manufacturer's certificates, indicating structural strength, destructive and nondestructive test analysis.
   3. Welder's Certificates: Submit certificates for welders employed on the Work, verifying AWS qualifications within the previous 12 months.

F. Qualification Data
   1. For Fabricator
   2. For Erector

1.4 QUALIFICATIONS

A. Fabricator: Company specializing in performing the Work of this Section with minimum three years experience.

B. Erector: Company specializing in performing the Work of this Section with minimum three years experience.

C. Welding Qualifications: Prior to commencing welding, welding procedures, welding operations, welders must be qualified in accordance with AWS D1.1.
   1. Welders who have not performed welding for a period of three or more months must be re-qualified.
   2. Welders whose work fails to pass inspection must be re-qualified before performing further welding.
   3. The costs of certifying qualifications must be paid as part of the Work of this Section.

1.5 COORDINATION

A. Coordinate the design, fabrication, and erection of structural steel with the requirements for openings and support of the Work of other Sections.

B. Coordinate the location and installation of items to be supported by structural steel and provide supports necessary.

1.6 DELIVERY, STORAGE, AND HANDLING

A. Deliver welding electrodes to job site in unbroken containers or packages bearing manufacturer's name.

B. Ship, store, and handle structural steel in a manner to prevent rusting and deformation. Store steel products off grade and positioned to drain rainwater readily.

C. Deliver bolts, nuts, and washers in bags or boxes, properly tagged for identification.

D. Store other metal products in a weather-tight and dry place until ready for use in the Work.

E. Store materials to permit easy access for inspection and identification.

PART 2 PRODUCTS

2.1 MATERIALS

A. Structural Steel Members: ASTM A36, A572 and A992, Grade 36 or 50 as indicated.

B. Structural Tubing: ASTM A500, Grade C.

C. Steel Pipe: ASTM A501 or ASTM A53, Type S, Grade B, E, or S; galvanized where indicated, black elsewhere.

2.2 FASTENERS

A. Shear Stud Connectors: ASTM A108 Grade 1010 through 1020, forged steel, headed, uncoated.
   1. Manufacturers
      a. Nelson Stud Welding, Inc.
      b. Tru-Weld Division, Tru-Fit Products Corporation.
      c. Stud Welding Associates, Inc.
      d. Or Equal

B. Bolts and Nuts: ASTM A325 galvanized to ASTM A153 for galvanized members.

C. Plain Washers: ANSI B18.22.1 Type A, galvanized.

D. Beveled Washers: ANSI B18.23.1 galvanized.

E. Anchor Bolts: ASTM A307, ASTM A490, or ASTM F1554 as indicated.

F. Post-Installed Anchors: Proprietary type, designed for intended uses, and ICC ESR evaluated.
   1. Manufacturers
      a. ITW Ramset/Red Head.
      b. Simpson.
      c. Hilti Co.

G. Shims and Leveling Devices: Type required for temporary support of base plates; of sufficient size and capacity to support dead load of structure without deformation.

H. All steel and metal fasteners exposed to damp conditions or the weather, except stainless steel, must be hot-dip galvanized unless otherwise indicated.

2.3 ACCESSORIES

A. Welding Electrodes: AWS D1.1; type required for materials being welded.

B. Non-shrink Grout: In accordance with Section 036000.

C. Temporary Supports, Staying, and Bracing: As required by the conditions of installation.

2.4 FINISHES

A. Shop and Touch-Up Primer
   1. Manufacturers
      a. Tnemec; Tnemec Primers Series V10.
      b. Rust-Oleum; Red Rusty Metal Primer.

c. Benjamin Moore & Co.; M07 Universal Metal Primer.

2.5 SHOP FABRICATION

A. Fabricate structural steel in accordance with AISC Specifications, and as indicated.

B. Splices: Locate only as indicated on approved shop drawings or approved by the Structural Engineer of Record.

C. Preparation
1. Prior to fabrication, straighten all materials by methods which will not damage material. Do not straighten any material until methods have been approved by the Structural Engineer of Record.
2. Prior to assembling component parts of a connection, thoroughly clean all contract surfaces of loose rust, scale, and burrs.

D. Shop Welding
1. Provide welded connections in shop where possible, unless otherwise indicated, in accordance with AWS D1.1.
2. Welding must be performed by welders certified to perform the Work.
3. Weld by shielded-arc method, submerged-arc method, flux-coated arc method, or other method approved by AWS. Perform welding in accordance with AWS D1.1.
4. Welds exposed to weather or damp conditions in the finished Work must be continuous and watertight and must be treated by hot or cold (field) galvanization.

E. Bolted Connections
1. Bolted connections must have not less than two bolts.
2. Punch, drill, or ream holes 1/16 inch larger than bolt diameter.
3. Ream unfair holes, but only up to next larger bolt size. Comply with General Notes on Structural Drawings.
4. If types of fastener are not indicated, use ASTM A325 bolts.

F. Shear Stud Connectors
1. Automatically end weld in accordance with AWS D1.1, Section 7, and the stud manufacturer's instructions.

2.6 SHOP FINISHING

A. Surface Preparation
1. Grind smooth weld spatter and sharp edges prior to cleaning.
2. Prior to application of primer or delivery from shop, clean surfaces as follows:
   a. SSPC SP-2 where structural steel is to receive cementitious fireproofing, or to be encased in cast-in-place concrete, or to be concealed by other construction in the completed Work.
   b. SSPC SP-7 where structural steel is to remain exposed in the completed Work.

B. Shop Primer
1. Shop coat surfaces of structural steel with 3 mil minimum dry film thickness of primer, unless otherwise specified.
2. Do not apply primer to within 2 inches of surfaces to be field welded, or to surfaces to receive cementitious fire-proofing, or to be encased in cast-in-place concrete.

3. Apply two coats of primer to surfaces of steel assemblies that will remain permanently concealed after assembly.
4. Apply shop primer within eight hours of surface cleaning.
5. Shop primer, of poor quality or insufficient thickness must be touched-up or recoated by the fabricator, and to a condition acceptable to the Owner's Representative.

C. Temporary Coating
1. Coat contact faces of steel which will be grouted for bearing, such as column base plates and similar items, with an oil-based, rust-inhibitive temporary coating containing no metallic pigment.
2. Manufacturers
   a. Houghton International Company; Rust-Veto 342.
   b. Lanco; Polyurethane Oil Red Oxide Primer MM-100.
   c. Columbia Paint & Coatings; Industrial Acrylic DTM Polyurethane.

2.7 QUALITY CONTROL

A. Materials and fabrication procedures are subject to inspection and test in mill, shop, and field. Such inspections and tests will not relieve the Contractor of responsibility for providing materials and fabrication procedures in compliance with specified requirements. Promptly remove and replace materials or fabricated components that do not comply.

2.8 TESTING AND INSPECTION

A. Testing and inspection must be in accordance with CBC Section 1705A.2.

B. Independent Testing Laboratory must provide the following testing:
1. Perform testing in accordance with Section 014529.
2. Perform nondestructive weld testing in accordance with CBC, Section 1705A.2.2.
3. Shear Stud Connectors
   a. At the beginning of each day's Work, make a minimum of two test stud welds to metal which is the same as the actual work piece, using the automatic welding equipment to be used for production welds.
   b. Bend each stud 90 degrees by striking with a heavy hammer and verify that there is no tearing out or cracking of the weld section.

C. Owner's Representative will provide the following inspections:
1. Inspect material tags and mill certifications.
2. Review written welding procedures.
3. Verify welding materials and welder certifications.
4. Continuously inspect welding in accordance with CBC, Section 1705A.2.2.
5. Inspect high strength bolts, nuts and washers in accordance with the CBC Section 1705A2. and AISC 360 Section M2.5.

2.9 TOLERANCES

A. Tolerances must be in accordance with AISC Code.

PART 3 EXECUTION

3.1 EXAMINATION

A. Verify that field conditions are acceptable and are ready to receive the Work. Notify the Owner's Representative, in writing, of any conditions requiring corrective action.

B. If unsatisfactory conditions exist, do not commence the installation until such conditions have been corrected. Beginning of installation means acceptance of existing conditions.

3.2 PREPARATION

A. Verify that field measurements are as indicated on Drawings and approved shop drawings. Report discrepancies to the Owner's Representative for clarification or resolution prior to starting erection.

B. Anchor Bolts
1. Upon completion of concrete placement, anchor bolts must be rechecked for correct location and elevations; make necessary corrections.
2. Projecting portion of anchor bolts must be wire brushed, the washers and nuts replaced, and the bolt protected from dust and other foreign materials by a wrapping of a waterproof material.

3.3 ERECTION

A. Install and erect structural steel in accordance with AISC Code and Specifications.

B. Allow for erection loads and provide temporary bracing to maintain structure safe, plumb, and in true alignment until completion of erection and installation of permanent bracing.

C. Column or column base plates must be set on a steel shims or otherwise supported and the structure aligned and plumbed prior to grouting under the base plates.

D. Place temporary bracing necessary for erecting before bolting in accordance with AISC recommendations. Additional or temporary bracing must be provided wherever design loads may be exceeded during erection or placing of equipment.

E. Welding
1. Welding will be permitted only as indicated on the approved shop drawings.
2. Welding must be performed by welders certified to perform the Work.
3. Weld by shielded-arc method, submerged-arc method, flux-coated arc method, or other method approved by AWS. Perform welding in accordance with AWS D1.1.
4. Welds exposed to weather or damp conditions in the finished Work must be continuous and watertight and must be treated by hot or cold (field) galvanization.

F. Bolted Connections
1. Bolted connections must have not less than two bolts.
2. Ream unfair holes, but only up to next larger bolt size.
3. As erection progresses, bolt up the Work to assume dead loads, lateral forces, and erection stresses.

G. Assembly Using Standard Threaded Fasteners

1. Beveled Washers: Provide under bolt heads or nuts riding on surfaces exceeding 5 percent slope with respect to head or nut.
2. Tighten bolts for full bearing under heads and nuts and to snugtight condition.

H. Shear Stud Connectors: Automatically end weld in accordance with AWS D1.1, Section 7, and the stud manufacturer's instructions.

I. Dissimilar metals must be protected from galvanic corrosion by means of pressure tapes, coatings, or isolators. Aluminum in contact with concrete or grout must be protected with a heavy coat of bituminous paint or two coats of zinc chromate.

J. After steel is aligned, grout under base plates and elsewhere indicated in accordance with Section 036000.

3.4 FINISHES

A. After erection, prime welds, abrasions, and surfaces not shop primed except surfaces to be in contact with concrete and surfaces to receive spray-on fireproofing or insulation.

B. Field paint unpainted field connections, bolts, and similar parts with primer.

3.5 ERECTION TOLERANCES

A. Erection tolerances must be in accordance with AISC Code.

B. Anchor Bolts: Setting Tolerances must be in accordance with AISC Code of Standard Practice, Section 7.5.

C. Individual members must be considered plumb or level where the error does not exceed 1:750.

D. Vertical dimensions shown as story height measured from the top of the beams at their connections at each column must not vary by more than plus or minus 1/4 inch per story exclusive of column shortening due to dead load.

E. Plumb displacement of the center line of columns from the established column line must be no more than 1/4 inch per story, noncumulative.

F. Floor framing must be considered level if floor framing members on each floor, measured from the top of column connections, do not vary more than plus or minus 1/4 inch.

G. Horizontal dimensions must not vary more than plus or minus 1/4 inch per 100 feet for the length or width of the structure, But mot to exceed a total of one inch.

H. Maximum Offset From True Alignment: 1/4 inch.

3.6 TESTING AND INSPECTION

A. Testing and inspection must be in accordance with CBC Section 1705A.2.

B. Independent Testing Laboratory must provide the following testing:
1. Perform testing in accordance with of Section 01 45 29.
2. Perform nondestructive weld testing in accordance with CBC, Section 1705A.2.2.

3. Shear Stud Connectors
   a. At the beginning of each day's Work, make a minimum of two test stud welds to metal which is the same as the actual work piece, using the automatic welding equipment to be used for production welds.
   b. Bend each stud 90 degrees by striking with a heavy hammer and verify that there is no tearing out or cracking of the weld section.

C. Owner's Representative will provide the following inspections:
   1. Inspect placement of all steel for conformance with Drawings and approved shop drawings to confirm member size and installation.
   2. Review written welding procedures.
   3. Verify welding materials and welder certifications.
   4. Continuously inspect welding in accordance with CBC, Section 1705A.2.2.
   5. Inspect high strength bolts, nuts and washers in accordance with the CBC Section 1705A2 and AISC 360 Section M2.5.

3.7 CLEANING

A. After erection, thoroughly clean surfaces of foreign a deleterious matter such as dirt, mud, oil, and grease that could impair bonding of finishes, concrete, or fireproofing.

3.8 REPAIR AND ADJUSTMENTS

A. Structural members must not be cut or altered without prior approval of the Structural Engineer of Record.

B. Flame cutting will be permitted only as specifically approved by the Structural Engineer of Record.

C. Only light drifting will be permitted to draw parts together.

D. Draft punching to match unaligned holes will not be permitted. Enlargement of holes necessary to make connections resulting from misfit must be performed by the reaming or drilling, and the proper size bolt must then be used. Ream unfair holes only up to next larger bolt size.

E. Repair abraded areas of shop-applied coatings, and areas of weld where the shop-applied coating has been damaged with a primer or galvanizing repair compound, as applicable, that is compatible with the shop coating.

3.9 DEFECTIVE WORK

A. Structural steel not conforming to required lines, details, dimensions, tolerances, finishes, strength, or other specified requirements must be considered defective. Notify the Owner's Representative upon discovery of these conditions.

B. Required repair or replacement of defective steel will be determined by the Owner's Representative.

C. Do not patch, fill, touch-up, repair, or replace steel except upon express direction of the Owner's Representative for each individual area.

D. Defective steel must be repaired or replaced as recommended by the Owner's Representative at no additional expense to the Owner.

3.10 PROTECTION

A. Protect structural steel from damage from subsequent construction operations.

END OF SECTION 051200

SECTION 05 30 00 - METAL DECKING

PART 1 - GENERAL

1.1 SUMMARY

A. Section Includes
   1. Steel roof decking and accessories.
   2. Steel floor decking and accessories.

B. Related Sections
   1. Section 051200 - Structural Steel Framing.

1.2 REFERENCES

A. For all references, use edition referenced by the 2022 edition of the California Building Code. If no edition is referenced, use latest edition.

B. CBC California Building Code, 2022 Edition.

C. AISC - Manual of Steel Construction.

D. AISI- Specifications for the Design of Cold-Formed Steel Structural Members.

E. AISI- Cold-Formed Steel Design Manual.

F. ASTM A36- Carbon Structural Steel.

G. ASTM A108- Steel Bars, Carbon, Cold Finished, Standard Quality.

H. ASTM A123- Zinc (Hot Dipped Galvanized) Coatings on Iron and Steel Products.

I. ASTM A653- Steel Sheet, Zinc-Coated (Galvanized) or Zinc-Iron Alloy-Coated (Galvannealed) by the Hot-Dip Process.

J. ASTM A924- General Requirements for Steel Sheet, Metallic-Coated by the Hot-Dip Process.

K. ASTM A1008- Steel, Sheet, Cold-Rolled, Carbon, Structural, High-Strength Low-Alloy, High-Strength Low-Alloy with Improved Formability, Solution Hardened, and Bake Hardenable.

L. ASTM D1056- Flexible Cellular Materials - Sponge or Expanded Rubber.

M. ASTM E84- Test Method for Surface Burning Characteristics of Building Materials.

N. AWS D1.1- Structural Welding Code - Steel.

O. AWS D1.3-Structural Welding Code - Sheet Steel.

P. FS DOD-P-21035- Paint, High Zinc Dust Content, Galvanizing Repair.

Q. SDI – RDDM Roof Deck Design Manual.

1.3 SUBMITTALS

A. Submit in accordance with Section 013300.

B. Shop Drawings
1. Show layout of decking units, anchorage details, every condition requiring closure units, cut deck openings, supplementary framing, special joint, attachments to other construction, and other accessories.
2. Indicate temporary shoring of decking where required.
3. Show type, shape, gauge, finish, dimensions, welds, lap details, and other pertinent information.
4. Contract documents cannot be used as shop drawings.

C. Specifications
1. Manufacturer's specifications for each deck type.

D. Product Data
1. Manufacturer's Product data for each type of deck, accessory and product indicated.
2. Manufacturer's technical bulletins and installation/application instructions including any specific installation sequences or other special instructions.
3. Material Safety Data Sheets (MSDS).

E. Certificates
1. Provide affidavits from the manufacturer listing test certificates by number for each size and type of decking, for both structural and acoustical performance.
2. Manufacturer shall provide affidavits of approval by the International Code Council Evaluation Service (ICC-ES) for the metal decking shapes proposed.
3. Manufacturer's Mill Certificate: Submit certificate that products meet or exceed specified requirements.
4. Mill Test Reports: Submit manufacturer's certificates, indicating structural strength, destructive and nondestructive test analysis.
5. Welder's Certificates: Submit certificates for welders employed on the Work, verifying AWS qualifications within the previous 12 months.

1.4 DESIGN REQUIREMENTS

A. Layout decking units to be continuous for not less than two spans and to rest on minimum of three supports where structural steel layout permits. Cantilevered units must have the cantilever and at least the adjacent span in one length.

B. Provide 18-gauge minimum tight fitting closure strips for installation at open ends, edges, and around openings.

C. Provide additional metal reinforcement and closure pieces as required for strength, continuity of decking, and support of other Work as shown on Drawings.

D. Provide slotted ventilating type decking where insulating concrete fill is indicated above. Do not use slotted decking except where required with insulating concrete.

1.5 QUALIFICATIONS

A. Welder Qualifications: Prior to commencing welding, welding procedures, welding operations, and welders must be qualified in accordance with AWS D1.1 and D1.3.
   1. Welders who have not performed welding for a period of three or more months must be re-qualified.
   2. Welders whose work fails to pass inspection must be re-qualified before performing further welding.
   3. The costs of certifying qualifications must be paid as part of the Work of this Section.

1.6 COORDINATION

A. Coordinate the design, fabrication, and erection of metal decking with the requirements for openings, blockouts, and support of the Work of other Sections.

B. Coordinate the edge of decking, openings, and blockout closure requirements.

C. Coordinate the location and installation of items to be supported by metal decking and provide supports necessary.

1.7 DELIVERY, STORAGE AND HANDLING

A. Deliver, handle, and store metal decking in a manner to prevent damage to or distortion of the units.

B. Do not permit the metal decking to come into contact with the ground.

C. Protect the metal decking from moisture.

D. Do not overload decking during construction period, and do not use decking for storage or working platform prior to welding in position.

PART 2 PRODUCTS

2.1 MATERIALS

A. Painted Sheet Steel
   1. Minimum yield strength of 33,000 psi, ASTM A1008, Grade C.
   2. Thickness: Minimum 18 gauge unless otherwise indicated.

B. Galvanized Sheet Steel
   1. Minimum yield strength of 33,000 psi, ASTM A653, Grade A.
   2. Roof Decking with Concrete Fill: 18 gauge unless otherwise indicated.
   3. Roof Decking without Concrete Fill: 18 gauge unless otherwise indicated.
   4. Floor Decking: Minimum 18 gauge.
   5. All deck units with concrete or insulating concrete shall be vented to provide 1% open area, except cellular and acoustic profiles.

C. Acceptable Manufacturers:
   1. ASC Steel Deck.
   2. Verco Manufacturing Co.
   3. Epic Metals Corporation

4. Subject to the requirements of Division 1, products of manufacturers not indicated may be proposed for substitution, provided that they are equal in design, product performance and warranty to the products specified and have ICC-ES approval.

D. Provide deck sections, type and gage as indicated on the drawings. Other manufacturers producing deck complying with these Specifications and having equivalent properties and dimensions will be subject to the Architect's review upon submission of substantiating data, and may be used only if equivalent to deck sections specified, in the Architect's opinion.

E. All deck units shall be approved by the International Code Council Evaluation Service (ICC_ES) for use as a diaphragm.
1. Diaphragm shear capacities shall be comparable (within 5%) to those listed on the drawings for the deck, welding, and spans indicated.

F. Acoustical Metal Deck: Fabricate panels to comply with the following:
1. Deck Type: Composite cellular with depth and gauge as indicated in drawings. Minimum 16-gauge x 16-gauge.
2. Cellular Deck Profile: As indicated, with acoustical perforation in bottom plate and insulation to provide sound absorption with a minimum NRC of 0.75 in accordance with ASTM C423 as determined by an accredited acoustical laboratory.
3. Side Laps: Interlocking seam.
4. Finish: Galvanized and shop-primed with manufacturer's standard baked-on, rust-inhibitive primer.
   a. Color: Gray top surface with white underside.

2.2 ACCESSORIES

A. Galvanized Sheet Metal Accessories: ASTM A924, commercial quality.

B. Flexible Closure Strips: Manufacturer's standard vulcanized, closed cell, foamed chloroprene ASTM D1056, Grade SCE 41, with ASTM E84 flammability rating of 25 or less.

C. Adhesive: Chloroprene based as recommended by closure strip manufacturer.

D. Miscellaneous Steel Shapes: ASTM A36, galvanized.

E. Galvanizing for Metal Accessories: ASTM A653, G60 coating designation.

F. Shear Stud Connectors: ASTM A108 Grade 1010 through 1020, forged steel, headed, uncoated.
1. Manufacturers
   a. Nelson Stud Welding, Inc.
   b. Tru-Weld Division, Tru-Fit Products Corporation.
   c. Stud Welding Associates, Inc.
   d. Or Equal

G. Miscellaneous Sheet Metal Deck Accessories: Steel sheet, minimum yield strength of 33,000 psi (230 MPa), not less than 0.0359-inch (0.91-mm) design uncoated thickness, of same material, thickness, and finish as deck; of profile indicated or required for application.

H. Galvanizing Repair Paint: SSPC-Paint 20 or MIL-P-21035B, with dry film containing a minimum of 94 percent zinc dust by weight.

I. Repair Paint: Manufacturer's standard rust-inhibitive primer of same color as primer.

J. Sound-Absorbing Insulation: Manufacturer's standard pre-molded roll or strip of glass fiber insulation factory-installed in cells of acoustical units. Sound absorbing elements shall be supported by spacesrs nominally 1/4" above the bottom plate surface to avoid plugging of the acoustical perforations when field painting.

2.3 FINISHES

A. Painted Sheet Steel: Manufacturer's standard, baked on, rust inhibitive, applied to chemically cleaned, phosphate coated surface.

B. Galvanized Sheet Steel
   1. Galvanized Finish: ASTM A653, G60.
   2. Galvanized Repair Paint: FS DOD-P-21035, high zinc dust content paint.

C. Finish for Decking to Receive Fireproofing: Galvanized, ASTM A653, 1.25-ounce commercial coating. Coordinate finish with Section 07 81 00.

2.4 FABRICATION

A. Fabricate in accordance with SDI, unless otherwise indicated.

B. Fabricate in lengths to be continuous for not less than two spans and to rest on minimum of three supports where structural steel layout permits. Cantilevered units must have the cantilever and at least the adjacent span in one length.

C. Fabricate in lengths to span support spacing, with flush, telescoped, or nested 3-inch end laps and nesting side laps unless otherwise shown or specified.

D. Fabricate metal closure strips for openings between decking and other construction and perimeter closure plates from not less than 18-gauge sheet steel of the same quality as the decking. Form to the configuration required to provide tight fitting closures at open ends of cells or flutes and sides of the decking.

E. Provide hanger holes in metal decking where finished ceilings are indicated below.

F. Shop-cut or field-cut units to fit around openings, along building perimeter, and around columns.

2.5 TOLERANCES

A. 1/4 inch to 10 feet, noncumulative.

PART 3 EXECUTION

3.1 EXAMINATION

A. Verify that field conditions are acceptable and are ready to receive the Work.

B. Verify steel supports are installed, properly aligned, and sufficiently level to permit proper bearing of the metal decking.

C. Notify the Owner's Representative, in writing, of any conditions requiring corrective action.

D. If unsatisfactory conditions exist, do not commence the installation until such conditions have been corrected. Beginning of installation means acceptance of existing conditions.

3.2 PREPARATION

A. Coordinate with other the Work supporting, contacting, or adjoining metal decking; and verify requirements for cutting, fitting, and attaching.

B. Coordinate the Work with installation of hanger wires for suspended ceilings.

C. Verify field dimensions and locations at site.

3.3 INSTALLATION

A. Place decking on supporting steel framework and adjust to final position with ends bearing on supporting members and accurately aligned end-to-end before being permanently fastened.

B. Place decking flat and square, secured to adjacent framing without warp or excessive deflection.

C. Locate extreme ends and edges over structural supports with positive, solid, complete bearing over full width of support for full width or length of unit without deforming units.

D. Cut and fit metal decking and accessories around other Work projecting through or adjacent to the roof decking. Provide neat, square, and trim cuts.

E. Provide minimum 2-inch bearing at all supports.

F. Locate end joints over supporting members.

G. Locate butted ends tight at center line of structural support with positive, solid, complete bearing over full width of unit without deforming units.

H. Do not stretch or contract side-lap interlocks.

I. Shoring for metal decking shall be provided by the contractor as required and as indicated in the corresponding ICC-ES report. Coordinate shoring requirements for construction live load (and concrete placement) with the manufacturer.

3.4 FASTENING

A. Permanently fasten deckings to steel supporting members by welds as indicated.

B. At butted joints, weld each unit to support as indicated.

C. Welds must be free of sharp points and edges.

D. Button punching or crimping in lieu of welding for metal deckings which do not receive concrete topping slabs will not be permitted.

E. Welding Procedure
   1. Perform welding in accordance with AISI and AWS D1.1 and AWS D1.3.
   2. Ensure surfaces to receive weld metal are clean and dry.
   3. Weight units with sandbags near welding points to secure firm contact of surface welded.
   4. Surfaces with temperature below 32 degrees F: Preheat to minimum 70 degrees F and maintain during welding.
   5. Maintain long arc while electrode is moved in circular direction until a proper hole size is burned in sheet metal. Shorten arc, and deposit metal around complete circumference of hole.

F. Clean welds immediately by wire brushing and touch up with paint before covering with succeeding unit.

G. Take special care to secure solid welds where unit is warped, curved or meets supporting member at angle.

3.5 TOLERANCES

A. 1/4 inch to 10 feet, noncumulative.

3.6 FIELD QUALITY CONTROL

A. Locate decking bundles to prevent overloading of structural members.

B. Do not use decking for storage or working platforms until permanently secured in position.

3.7 TESTING AND INSPECTION

A. Testing and inspection must be in accordance with CBC Section 1705.2.

B. Independent Testing Laboratory must provide the following testing:
   1. Perform testing in accordance with Section 014529.
   2. Decking welding in accordance with AWS D1.3

C. Owner's Representative will provide the following inspections:
   1. Inspect decking and closure placement for conformance to Drawings and approved shop drawings.
   2. Review mill analysis and certificates of compliance.
   3. Provide periodic inspection of decking welding, including prior fit up, welding equipment, and welder certification.

3.8 REPAIR, ADJUSTMENT AND CLEANING

A. Repair abraded areas of the shop-applied coating, areas of weld where the shop-applied coating has been damaged and rust spots on the bottom surfaces of decking, with a galvanizing repair compound (zinc dust-zinc oxide primer), and in accordance with the metal decking manufacturer's printed instructions.

B. Burn spots on supporting exposed steel shall be touched up with same primer as used on adjacent surface.

C. Clean surfaces of installed deck by effective means to receive sprayed-on fireproofing or finish painting as indicated.

D. Comply with AWS requirements for the methods used in correcting the welding Work.

3.9 DEFECTIVE WORK

A. Metal decking not conforming to required lines, details, dimensions, tolerances, finishes, strength, or other specified requirements must be considered defective. Notify the Owner's Representative upon discovery of these conditions.

B. Required repair or replacement of defective metal decking will be determined by the Owner's Representative.

C. Do not patch, fill, touch-up, repair, or replace metal decking except upon express direction of the Owner's Representative for each individual area.

D. Defective metal decking must be repaired or replaced as recommended by the Owner's Representative at no additional expense to the Owner.

3.10 PROTECTION

A. Protect metal decking from damage from subsequent construction operations.

B. Provide protection in accordance with manufacturer's instructions.

END OF SECTION 053000

SECTION 054000 - COLD-FORMED METAL FRAMING

PART 1 - GENERAL

1.1 SUMMARY

A. Section Includes

1. Exterior wall framing.
2. Ceiling joist framing.
3. Bulkhead framing.

B. Related Documents and Sections:

1. Section 051200 - Structural Steel Framing.
2. Section 055000 - Metal Fabrications.
3. Section 092200 - Supports for Plaster and Gypsum Board.

1.2 REFERENCES

A. International Building Code (IBC), 2021 edition. For all references, use edition referenced by 2021 IBC. If no edition is referenced, use latest edition.

B. CSSA – Certified Steel Stud Association, ICC 3016 Product Technical Information.

C. SFIA – Steel Framing Industry Association, ICC 2457 Product Technical Information.

D. SSMA – Steel Stud Manufacturers Association, ICC 4943P Product Technical Information.

E. AISI NAS-01 -- Design of Cold-Formed Steel Design Manual.

1.3 PERFORMANCE REQUIREMENTS

A. Structural Performance: Provide cold-formed metal framing capable of withstanding design loads within limits and under conditions indicated.

1. Design Loads:

a. Dead Loads: Weights of materials and construction.
b. Ceiling Live Loads: 10 psf + 300 lb. load at midspan.
c. Out of plane wall lateral loads: 5 psf.

2. Deflection Limits: Design framing systems to withstand design loads without deflections greater than the following:

a. Interior Load-Bearing Wall Framing: Horizontal deflection of 1/240 of the wall height under a horizontal load of 5 psf.
b. Ceiling Joist Framing: Vertical deflection of 1/240.

3. Design framing systems to provide for movement of framing members without damage or overstressing, sheathing failure, connection failure, undue strain on fasteners and anchors, or other detrimental effects when subject to a maximum ambient temperature change of 120 deg F.
4. Design framing system to maintain clearances at openings, to allow for construction tolerances, and to accommodate live load deflection of primary building structure as follows:

   a. Upward and downward movement of ¾ inch.

5. Blast Resistance: Provide products and submittals that comply with Section 013550 - Blast Performance Requirements.

B. Cold-Formed Steel Framing, General: Design according to AISI's "Standard for Cold-Formed Steel Framing - General Provisions."

1. Headers: Design according to AISI's "Standard for Cold-Formed Steel Framing – Header Design."

1.4 SUBMITTALS

A. Submit in accordance with Section 013300.

B. Design must be performed under the direct supervision of and sealed by a Professional Structural Engineer licensed in the State of California and experienced in the design of this Work.

C. Shop Drawings:

1. Show layout, spacings, sizes, thicknesses, and types of cold-formed metal framing; fabrication; and fastening and anchorage details, including mechanical fasteners.
2. Show reinforcing channels, opening framing, supplemental framing, strapping, bracing, bridging, splices, accessories, connection details, and attachment to adjoining work.
3. For cold-formed metal framing indicated to comply with design loads, include structural analysis data signed and sealed by a Professional Structural Engineer licensed in the State of California responsible for their preparation.

D. Welding certificates.

E. Product Data:

1. Product data for products and materials indicated.
2. Manufacturer's technical bulletins and installation/application instructions.
3. Material Safety Data Sheets (MSDS).

F. Qualification Data: For testing agency.

G. Product Test Reports: From a qualified testing agency, unless otherwise stated, indicating that each of the following complies with requirements, based on evaluation of comprehensive tests for current products:

1. Steel sheet.
2. Expansion anchors.
3. Power-actuated fasteners.
4. Mechanical fasteners:
5. Vertical deflection clips.
6. Horizontal drift deflection clips.
7. Miscellaneous structural clips and accessories.

H. Research/Evaluation Reports: For cold-formed metal framing.

I. Sustainability Submittals

1. Provide submittals conforming to IRA LEC Product Requirements as detailed in Part 2:

a. Provide a product-specific Type III (third-party verified) Environmental Product Declaration (EPD) that:

1) (i) is based on the PCRs used to develop these limits: UL's PCR Guidance for Building-Related Products and Services, Part B: Designated Steel Construction Product EPD Requirements (8/2020, version 2.0) or SCS Global Services' PCR for Designated Steel Construction Products (5/2015, version 1.0); and
2) (ii) conforms with ISO 14025 and ISO 21930.
3) Where feasible, EPDs must also rely on facility-specific data, including for the supply chain's associated unit processes, such as fabricated steel's upstream steel mill(s), rather than industry or manufacturer average data. If an EPD containing facility-specific data for the material's most greenhouse-gas intensive processes is unavailable, an EPD without such data that meets Compliance Documentation criteria (i) and (ii) is sufficient.

1.5 QUALITY ASSURANCE

A. Testing Agency Qualifications: An independent testing agency, acceptable to authorities having jurisdiction, qualified according to ASTM E 329 to conduct the testing indicated.

B. Product Tests: Mill certificates or data from a qualified independent testing agency indicating steel sheet complies with requirements, including base-metal thickness, yield strength, tensile strength, total elongation, chemical requirements, ductility, and metallic- coating thickness.

C. Welding: Qualify procedures and personnel according to AWS D1.1/D1.1M, "Structural Welding Code--Steel," and AWS D1.3, "Structural Welding Code--Sheet Steel." The costs of certifying qualifications must be paid as part of the Work of this Section.

D. Fire-Test-Response Characteristics: Where indicated, provide cold-formed metal framing identical to that of assemblies tested for fire resistance per ASTM E 119 by a testing and inspecting agency acceptable to authorities having jurisdiction.

E. AISI Specifications and Standards: Comply with AISI's "North American Specification for the Design of Cold-Formed Steel Structural Members" and its "Standard for Cold-Formed Steel Framing - General Provisions."

1. Comply with AISI's "Standard for Cold-Formed Steel Framing - Header Design."

1.6 DELIVERY, STORAGE AND HANDLING

A. Protect cold-formed metal framing from corrosion, deformation, and other damage during delivery, storage, and handling.

B. Store cold-formed metal framing, protect with a waterproof covering, and ventilate to avoid condensation.

PART 2 - PRODUCTS

2.1 MANUFACTURERS

A. Available manufacturers: Subject to compliance with requirements, manufacturers offering cold-formed metal framing that may be incorporated into the Work include, but are not limited to, the following:

B. Manufacturers: Subject to compliance with requirements, provide cold-formed metal framing by one of the following:

1. AllSteel Products, Inc.
2. California Expanded Metal Products Company.
3. ClarkDietrich Building Systems.
4. Consolidated Fabricators Corp.: Building Products Division.
5. Craco Metals Manufacturing, LLC.
6. Custom Stud, Inc.
7. Design Shapes in Steel.
8. Formetal Co. Inc.
9. MarinoWare; a division of Ware Industries.

10. Quail Run Building Materials, Inc.
11. SCAFCO Corporation.
12. Southeastern Stud & Components, Inc.
13. Steel Construction Systems.
14. United Metal Products, Inc.
15. Or Equal.

2.2 MATERIALS

A. Sheet Steel: ASTM A 1003/A 1003M, Structural Grade, Type H, metallic coated, of grade and coating weight as follows:

1. Grade: ST33H or ST50H.
2. Coating: G60 (Z180).

B. Sheet Steel for Vertical Deflection Clips: ASTM A 653/A 653M, structural steel, zinc coated, of grade and coating as follows:

1. Grade: 50, Class 1 or 2.
2. Coating: G90 (Z275).

2.3 WALL FRAMING

A. Steel Studs: Manufacturer's standard C-shaped steel studs, of web depths indicated, punched, with stiffened flanges, and as follows:

1. Minimum Base-Metal Thickness: 0.0566 inch or as noted on the drawings.
2. Flange Width: 1-5/8 inches or as noted on the drawings.
3. Minimum Section Properties: Sxx=0.406in^3; Ixx=0.804in^4; Ma=10.20k-in.

B. Steel Track: Manufacturer's standard U-shaped steel track, of web depths indicated, un-punched, with straight flanges, and as follows:

1. Minimum Base-Metal Thickness: 0.0451 inch, or as noted on the drawings.
2. Flange Width: 1-1/2 inches.

C. Steel Box or Back-to-Back Headers: Manufacturer's standard C-shapes used to form header beams, of web depths indicated, punched, with stiffened flanges, and as follows:

1. Minimum Base-Metal Thickness: 0.0451 inches or as noted on the drawings.
2. Flange Width: 2 inches, minimum.
3. Minimum Section Properties: Sxx=1.106in^3; Ixx=3.319in^4; Ma=24.07k-in.

2.4 CEILING JOIST FRAMING

A. Steel Ceiling Joists: Manufacturer's standard C-shaped steel sections, of web depths indicated, un-punched, with stiffened flanges, and as follows:

1. Minimum Base-Metal Thickness: 0.0566 inch or as noted on drawings.
2. Flange Width: 2 inches, minimum.
3. Minimum Section Properties: Sxx=1.106in^3; Ixx=3.319in^4; Ma=24.07k-in.

2.5 FRAMING ACCESSORIES

A. Fabricate steel-framing accessories from sheet steel, ASTM A 1003/A 1003M, Structural Grade, Type H, metallic coated, of same grade and coating weight used for framing members.

B. Provide accessories of manufacturer's standard thickness and configuration, unless otherwise indicated, as follows:

1. Supplementary framing.
2. Bracing, bridging, and solid blocking.
3. Web stiffeners.
4. Anchor clips.
5. End clips.
6. Foundation clips.
7. Gusset plates.
8. Stud kickers, knee braces, and girts.
9. Joist hangars and end closures.
10. Hole reinforcing plates.
11. Backer plates.

2.6 ANCHORS, CLIPS, AND FASTENERS

A. Steel Shapes and Clips: ASTM A 36/A 36M, zinc-coated by hot-dip process according to ASTM A 123/A 123M.

B. Post-Installed Anchors: Proprietary type, designed for intended uses, and ICC ESR evaluated.

1. Manufacturers

a. ITW Ramset/Red Head.
b. Simpson.
c. Hilti Co.
d. Or Equal.

C. Power-Actuated Anchors: Fastener system of type suitable for application indicated, fabricated from corrosion-resistant materials, with capability to sustain, without failure, a load equal to 10 times design load, as determined by testing per ASTM E 1190 conducted by a qualified independent testing agency.

D. Mechanical Fasteners: ASTM C 1513, corrosion-resistant coating, self-drilling, self-tapping steel drill screws.

1. Head Type: Low-profile head beneath sheathing, manufacturer's standard elsewhere.

E. Welding Electrodes: Comply with AWS standards.

2.7 MISCELLANEOUS MATERIALS

A. Cement Grout: Portland cement, ASTM C 150, Type I; and clean, natural sand, ASTM C 404. Mix at ratio of 1 part cement to 2-1/2 parts sand, by volume, with minimum water required for placement and hydration.

B. Nonmetallic, Non-shrink Grout: Premixed, nonmetallic, noncorrosive, non-staining grout containing selected silica sands, Portland cement, shrinkage-compensating agents, and plasticizing and water-reducing agents, complying with ASTM C 1107, with fluid consistency and 30-minute working time.

C. Shims: Load bearing, high-density multimonomer plastic, non-leaching.

D. Sealer Gaskets: Closed-cell neoprene foam, ¼ inch thick, selected from manufacturer's standard widths to match width of bottom track or rim track members.

2.8 FABRICATION

A. Fabricate cold-formed metal framing and accessories plumb, square, and true to line, and with connections securely fastened, according to referenced AISI's specifications and standards, manufacturer's written instructions, and requirements in this Section.

1. Fabricate framing assemblies using jigs or templates.
2. Cut framing members by sawing or shearing; do not torch cut.
3. Fasten cold-formed metal framing members by welding, screw fastening, clinch fastening, or riveting as standard with fabricator. Wire tying of framing members is not permitted.

   a. Comply with AWS D1.3 requirements and procedures for welding, appearance and quality of welds, and methods used in correcting welding work.
   b. Located mechanical fasteners and install according to Shop Drawings, with screw penetrating jointed members by not less than three exposed screw threads.

4. Fasten other materials to cold-formed metal framing by welding, bolting, or screw fastening, according to Shop Drawings.

B. Reinforce, stiffen, and brace framing assemblies to withstand handling, delivery, and erection stresses. Lift fabricated assemblies to prevent damage or permanent distortion.

C. Fabrication Tolerances: Fabricate assemblies level, plumb, and true to line to a maximum allowable tolerance variation of 1/8 inch in 10 feet (1:960) and as follows:

1. Spacing: Space individual framing members no more than plus or minus 1/8 inch from plan location. Cumulative error must not exceed minimum fastening requirements of sheathing or other finishing materials.
2. Squareness: Fabricate each cold-formed metal framing assembly to a maximum out-of-square tolerance of 1/8 inch.

PART 3 - EXECUTION

3.1 EXAMINATION

A. Examine supporting substrates and abutting structural framing for compliance with requirements for installation tolerances and other conditions affecting performance.

1. Proceed with installation only after unsatisfactory conditions have been corrected.

3.2 PREPARATION

A. Before sprayed fire-resistive materials are applied, attach continuous angles, supplementary framing, or tracks to structural members indicated to receive sprayed fire-resistive materials.

B. After applying sprayed fire-resistive materials, remove only as much of these materials as needed to complete installation of cold-formed framing without reducing thickness of fire- resistive materials below that are required to obtain fire-resistance rating indicated. Protect remaining fire-resistive materials from damage.

C. Install load bearing shims or grout between the underside of wall bottom track or rim track and the top of foundation wall or slab at stud or joist locations to ensure a uniform bearing surface on supporting concrete or masonry construction.

D. Install sealer gaskets to isolate the underside of wall bottom track or rim track and the top of foundation wall or slab at stud or joist locations.

3.3 INSTALLATION

A. Cold-formed metal framing may be shop or field fabricated for installation, or it may be field assembled.

B. Install cold-formed metal framing according to AISI's "Standard for Cold-Formed Steel Framing - General Provisions" and to manufacturer's written instructions unless more stringent requirements are indicated.

C. Install shop- or field-fabricated, cold-formed framing and securely anchor to supporting structure.

1. Screw, bolt, or weld wall panels at horizontal and vertical junctures to produce flush, even, true-to-line joints with maximum variation in plane and true position between fabricated panels not exceeding 1/16 inch.

D. Install cold-formed metal framing and accessories plumb, square, and true to line, and with connections securely fastened.

1. Cut framing members by sawing or shearing; do not torch cut.
2. Fasten cold-formed metal framing members by welding, screw fastening, clinch fastening, or riveting. Wire tying of framing members is not permitted.

a. Comply with AWS D1.3 requirements and procedures for welding, appearance and quality of welds, and methods used in correcting welding work.
b. Locate mechanical fasteners and install according to Shop Drawings, and complying with requirements for spacing, edge distances, and screw penetration.

E. Install framing members in one-piece lengths unless splice connections are indicated for track or tension members.

F. Install temporary bracing and supports to secure framing and support loads comparable in intensity to those for which structure was designed. Maintain braces and supports in place, undisturbed, until entire integrated supporting structure has been completed and permanent connections to framing are secured.

G. Do not bridge building expansion and control joints with cold-formed metal framing. Independently frame both sides of joints.

H. Install insulation, specified in Division 07 Section "Thermal Insulation," in built-up exterior framing members, such as headers, sills, boxed joists, and multiple studs at openings, that are inaccessible on completion of framing work.

I. Fasten hole reinforcing plate over web penetrations that exceed size of manufacturer's standard punched openings.

J. Erection Tolerances: Install cold-formed metal framing level, plumb, and true to line to a maximum allowable tolerance variation of 1/8 inch in 10 feet (1:960) and as follows:

1. Space individual framing members no more than plus or minus 1/8 inch (3 mm) from plan location. Cumulative error must not exceed minimum fastening requirements of sheathing or other finishing materials.

3.4 FIELD QUALITY CONTROL

A. Testing: Owner will engage a qualified independent testing and inspecting agency to perform field tests and inspections and prepare test reports.

B. Field and shop welds will be subject to testing and inspecting.

C. Testing agency will report test results promptly and in writing to Contractor and Architect.

D. Remove and replace work where test results indicate that it does not comply with specified requirements.

E. Additional testing and inspecting, at Contractor's expense, will be performed to determine compliance of replaced or additional work with specified requirements.

3.5 REPAIR AND PROTECTION

A. Galvanizing Repairs: Prepare and repair damaged galvanized coatings on fabricated and installed cold-formed metal framing with galvanized repair paint according to ASTM A 780 and manufacturer's written instructions.

B. Provide final protection and maintain conditions, in a manner acceptable to manufacturer and Installer, that ensure that cold-formed metal framing is without damage or deterioration at time of Substantial Completion.

END OF SECTION 054000

SECTION 055000 - METAL FABRICATIONS

PART 1 - GENERAL

1.1 RELATED DOCUMENTS

A. Drawings and general provisions of the Contract, including General and Supplementary Conditions and Division 01 Specification Sections, apply to this Section.

1.2 SUMMARY

A. Section Includes:
   1. Steel framing and supports for applications where framing and supports are not specified in other Sections.
   2. Metal bollards.
   3. Lintels.

B. Products furnished, but not installed, under this Section include the following:
   1. Anchor bolts, steel pipe sleeves, slotted-channel inserts, and wedge-type inserts indicated to be cast into concrete or built into unit masonry.
   2. Steel weld plates and angles for casting into concrete for applications where they are not specified in other Sections.

C. Related Requirements:

   1. Section 033000 "Cast-in-Place Concrete" for installing anchor bolts, steel pipe sleeves, slotted-channel inserts, wedge-type inserts, and other items cast into concrete.
   2. Section 042000 "Unit Masonry" for installing loose lintels, anchor bolts, and other items built into unit masonry.
   3. Section 051200 "Structural Steel Framing."

1.3 COORDINATION

A. Coordinate selection of shop primers with topcoats to be applied over them. Comply with paint and coating manufacturers' written recommendations to ensure that shop primers and topcoats are compatible with one another.

B. Coordinate installation of metal fabrications that are anchored to or that receive other work. Furnish setting drawings, templates, and directions for installing anchorages, including sleeves, concrete inserts, anchor bolts, and items with integral anchors, that are to be embedded in concrete or masonry. Deliver such items to Project site in time for installation.

1.4 ACTION SUBMITTALS

A. Product Data: For the following:

1. Paint products.
2. Grout.

B. Shop Drawings: Show fabrication and installation details. Include plans, elevations, sections, and details of metal fabrications and their connections. Show anchorage and accessory items. Provide Shop Drawings for the following:
1. Steel framing and supports for mechanical and electrical equipment.
2. Steel framing and supports for applications where framing and supports are not specified in other Sections.
3. Metal bollards.
4. Metal Ladders.

1.5 QUALITY ASSURANCE

A. Welding Qualifications: Qualify procedures and personnel according to AWS D1.1/D1.1M, "Structural Welding Code - Steel."

B. Welding Qualifications: Qualify procedures and personnel according to the following:

1. AWS D1.1/D1.1M, "Structural Welding Code - Steel."

1.6 FIELD CONDITIONS

A. Field Measurements: Verify actual locations of walls and other construction contiguous with metal fabrications by field measurements before fabrication.

PART 2 - PRODUCTS

2.1 PERFORMANCE REQUIREMENTS

A. Delegated Design: Engage a qualified professional engineer, as defined in Section 014000 "Quality Requirements," to design ladders.

B. Thermal Movements: Allow for thermal movements from ambient and surface temperature changes acting on exterior metal fabrications by preventing buckling, opening of joints, overstressing of components, failure of connections, and other detrimental effects.

1. Temperature Change: 120 deg F (67 deg C), ambient; 180 deg F (100 deg C), material surfaces.

2.2 METALS

A. Metal Surfaces, General: Provide materials with smooth, flat surfaces unless otherwise indicated. For metal fabrications exposed to view in the completed Work, provide materials without seam marks, roller marks, rolled trade names, or blemishes.

B. Aluminum Plate and Sheet: ASTM B209 (ASTM B209M), Alloy 6061-T6.

C. Aluminum Extrusions: ASTM B221 (ASTM B221M), Alloy 6063-T6.

D. Aluminum-Alloy Rolled Tread Plate: ASTM B632/B632M, Alloy 6061-T6.

E. Aluminum Castings: ASTM B26/B26M, Alloy 443.0-F.

F. Steel Plates, Shapes, and Bars: ASTM A 36/A 36M.

G. Rolled-Steel Floor Plate: ASTM A 786/A 786M, rolled from plate complying with ASTM A 36/A 36M or ASTM A 283/A 283M, Grade C or D.

H. Steel Tubing: ASTM A 500/A 500M, cold-formed steel tubing.

I. Steel Pipe: ASTM A 53/A 53M, Standard Weight (Schedule 40) unless otherwise indicated.

J. Slotted Channel Framing: Cold-formed metal box channels (struts) complying with MFMA-4.

1. Size of Channels: 1-5/8 by 1-5/8 inches (41 by 41 mm).
2. Material: Cold-rolled steel, ASTM A 1008/A 1008M, structural steel, Grade 33 (Grade 230); 0.0677-inch (1.7-mm) minimum thickness; coated with rust-inhibitive, baked-on, acrylic enamel.

2.3 FASTENERS

A. Steel Bolts and Nuts: Regular hexagon-head bolts, ASTM A 325, Type 3 (ASTM A 325M, Type 3); with hex nuts, ASTM A 563, Grade C3 (ASTM A 563M, Class 8S3); and, where indicated, flat washers.

B. Stainless-Steel Bolts and Nuts: Regular hexagon-head annealed stainless-steel bolts, ASTM F 593 (ASTM F 738M); with hex nuts, ASTM F 594 (ASTM F 836M); and, where indicated, flat washers; Alloy Group 1 (A1).

C. Anchor Bolts: ASTM F 1554, Grade 36, of dimensions indicated; with nuts, ASTM A 563 (ASTM A 563M); and, where indicated, flat washers.

1. Hot-dip galvanize or provide mechanically deposited, zinc coating where item being fastened is indicated to be galvanized.

D. Anchors, General: Anchors capable of sustaining, without failure, a load equal to six times the load imposed when installed in unit masonry and four times the load imposed when installed in concrete, as determined by testing according to ASTM E 488/E 488M, conducted by a qualified independent testing agency.

E. Cast-in-Place Anchors in Concrete: Either threaded type or wedge type unless otherwise indicated; galvanized ferrous castings, either ASTM A 47/A 47M malleable iron or ASTM A 27/A 27M cast steel. Provide bolts, washers, and shims as needed, all hot-dip galvanized per ASTM F 2329.

F. Post-Installed Anchors: Chemical anchors.

1. Material for Interior Locations: Carbon-steel components zinc plated to comply with ASTM B 633 or ASTM F 1941 (ASTM F 1941M), Class Fe/Zn 5, unless otherwise indicated.
2. Material for Exterior Locations and Where Stainless Steel Is Indicated: Alloy Group 1 (A1) stainless-steel bolts, ASTM F 593 (ASTM F 738M), and nuts, ASTM F 594 (ASTM F 836M).

G. Slotted Channel Inserts: Cold-formed, hot-dip galvanized-steel box channels (struts) complying with MFMA-4, 1-5/8 by 7/8 inches (41 by 22 mm) by length indicated with anchor straps or studs not less than 3 inches (75 mm) long at not more than 8 inches (200 mm) o.c. Provide with temporary filler and tee-head bolts, complete with washers and nuts, all zinc-plated to comply with ASTM B 633, Class Fe/Zn 5, as needed for fastening to inserts.

2.4 MISCELLANEOUS MATERIALS

A. Shop Primers: Provide primers that comply with Section 099113 "Exterior Painting," Section 099123 Interior Painting," and Section 099600 "High-Performance Coatings."

B. Universal Shop Primer: Fast-curing, lead- and chromate-free, universal modified-alkyd primer complying with MPI#79 and compatible with topcoat.

1. Use primer containing pigments that make it easily distinguishable from zinc-rich primer.

C. Water-Based Primer: Emulsion type, anticorrosive primer for mildly corrosive environments that is resistant to flash rusting when applied to cleaned steel, complying with MPI#107 and compatible with topcoat.

D. Epoxy Zinc-Rich Primer: Complying with MPI#20 and compatible with topcoat.

E. Shop Primer for Galvanized Steel: Primer formulated for exterior use over zinc-coated metal and compatible with finish paint systems indicated.

F. Galvanizing Repair Paint: High-zinc-dust-content paint complying with SSPC-Paint 20 and compatible with paints specified to be used over it.

G. Bituminous Paint: Cold-applied asphalt emulsion complying with ASTM D 1187/D 1187M.

H. Nonshrink, Nonmetallic Grout: Factory-packaged, nonstaining, noncorrosive, nongaseous grout complying with ASTM C 1107/C 1107M. Provide grout specifically recommended by manufacturer for interior and exterior applications.

I. Concrete: Comply with requirements in Section 033000 "Cast-in-Place Concrete" for normal-weight, air-entrained, concrete with a minimum 28-day compressive strength of 3000 psi (20 MPa).

2.5 FABRICATION, GENERAL

A. Shop Assembly: Preassemble items in the shop to greatest extent possible. Disassemble units only as necessary for shipping and handling limitations. Use connections that maintain structural value of joined pieces. Clearly mark units for reassembly and coordinated installation.

B. Cut, drill, and punch metals cleanly and accurately. Remove burrs and ease edges to a radius of approximately 1/32 inch (1 mm) unless otherwise indicated. Remove sharp or rough areas on exposed surfaces.

C. Form bent-metal corners to smallest radius possible without causing grain separation or otherwise impairing work.

D. Form exposed work with accurate angles and surfaces and straight edges.

E. Weld corners and seams continuously to comply with the following:

1. Use materials and methods that minimize distortion and develop strength and corrosion resistance of base metals.
2. Obtain fusion without undercut or overlap.
3. Remove welding flux immediately.
4. At exposed connections, finish exposed welds and surfaces smooth and blended so no roughness shows after finishing and contour of welded surface matches that of adjacent surface.

F. Form exposed connections with hairline joints, flush and smooth, using concealed fasteners or welds where possible. Where exposed fasteners are required, use Phillips flat-head (countersunk) fasteners unless otherwise indicated. Locate joints where least conspicuous.

G. Fabricate seams and other connections that are exposed to weather in a manner to exclude water. Provide weep holes where water may accumulate.

H. Cut, reinforce, drill, and tap metal fabrications as indicated to receive finish hardware, screws, and similar items.

I. Provide for anchorage of type indicated; coordinate with supporting structure. Space anchoring devices to secure metal fabrications rigidly in place and to support indicated loads.

J. Where units are indicated to be cast into concrete or built into masonry, equip with integrally welded steel strap anchors, 1/8 by 1-1/2 inches (3.2 by 38 mm), with a minimum 6-inch (150-mm) embedment and 2-inch (50-mm) hook, not less than 8 inches (200 mm) from ends and corners of units and 24 inches (600 mm) o.c., unless otherwise indicated.

2.6 MISCELLANEOUS FRAMING AND SUPPORTS

A. General: Provide steel framing and supports not specified in other Sections as needed to complete the Work.

B. Fabricate units from steel shapes, plates, and bars of welded construction unless otherwise indicated. Fabricate to sizes, shapes, and profiles indicated and as necessary to receive adjacent construction.

1. Fabricate units from slotted channel framing where indicated.
2. Furnish inserts for units installed after concrete is placed.

C. Galvanize miscellaneous framing and supports where indicated.

2.7 MISCELLANEOUS STEEL TRIM

A. Unless otherwise indicated, fabricate units from steel shapes, plates, and bars of profiles shown with continuously welded joints and smooth exposed edges. Miter corners and use concealed field splices where possible.

B. Provide cutouts, fittings, and anchorages as needed to coordinate assembly and installation with other work.

1. Provide with integrally welded steel strap anchors for embedding in concrete or masonry construction.

C. Galvanize exterior miscellaneous steel trim.

2.8 METAL BOLLARDS

A. Fabricate metal bollards from Schedule 40 steel pipe.
1. Where bollards are indicated to receive controls for door operators, provide cutouts for controls and holes for wire.

B. Galvanize bollards with hot dipped galvanizing.

2.9 LOOSE BEARING AND LEVELING PLATES

A. Provide loose bearing and leveling plates for steel items bearing on masonry or concrete construction. Drill plates to receive anchor bolts and for grouting.

B. Galvanize plates in exterior walls.

2.10 STEEL WELD PLATES AND ANGLES

A. Provide steel weld plates and angles not specified in other Sections, for items supported from concrete construction as needed to complete the Work. Provide each unit with no fewer than two integrally welded steel strap anchors for embedding in concrete.

2.11 LOOSE STEEL LINTELS

A. Fabricate loose steel lintels from steel angles and shapes of size indicated for openings and recesses in masonry walls and partitions at locations indicated. Fabricate in single lengths for each opening unless otherwise indicated. Weld adjoining members together to form a single unit where indicated.

B. Size loose lintels to provide bearing length at each side of openings, as listed on drawings, but not less than 8 inches (200 mm) unless otherwise indicated.

C. Galvanize loose steel lintels located in exterior walls.

D. Prime loose steel lintels that are not in exterior walls.

2.12 FINISHES, GENERAL

A. Finish metal fabrications after assembly.

B. Finish exposed surfaces to remove tool and die marks and stretch lines, and to blend into surrounding surface.

2.13 STEEL AND IRON FINISHES

A. Galvanizing: Hot-dip galvanize items as indicated to comply with ASTM A 153/A 153M for steel and iron hardware and with ASTM A 123/A 123M for other steel and iron products.

1. Do not quench or apply post galvanizing treatments that might interfere with paint adhesion.

B. Preparation for Shop Priming Galvanized Items: After galvanizing, thoroughly clean railings of grease, dirt, oil, flux, and other foreign matter, and treat with metallic phosphate process.

C. Shop prime iron and steel items not indicated to be galvanized unless they are to be embedded in concrete, sprayed-on fireproofing, or masonry, or unless otherwise indicated.

1. Shop prime with universal shop primer unless zinc-rich primer is indicated.

D. Preparation for Shop Priming: Prepare surfaces to comply with requirements indicated below:

1. Exterior Items: SSPC-SP 6/NACE No. 3, "Commercial Blast Cleaning."
2. Items Indicated to Receive Zinc-Rich Primer: SSPC-SP 6/NACE No. 3, "Commercial Blast Cleaning."
3. Items Indicated to Receive Primers Specified in Section 099600 "High-Performance Coatings": SSPC-SP 6/NACE No. 3, "Commercial Blast Cleaning."
4. Other Items: SSPC-SP 3, "Power Tool Cleaning."

E. Shop Priming: Apply shop primer to comply with SSPC-PA 1, "Paint Application Specification No. 1: Shop, Field, and Maintenance Painting of Steel," for shop painting.

1. Stripe paint corners, crevices, bolts, welds, and sharp edges.

PART 3 - EXECUTION

3.1 INSTALLATION, GENERAL

A. Cutting, Fitting, and Placement: Perform cutting, drilling, and fitting required for installing metal fabrications. Set metal fabrications accurately in location, alignment, and elevation; with edges and surfaces level, plumb, true, and free of rack; and measured from established lines and levels.

B. Fit exposed connections accurately together to form hairline joints. Weld connections that are not to be left as exposed joints but cannot be shop welded because of shipping size limitations. Do not weld, cut, or abrade surfaces of exterior units that have been hot-dip galvanized after fabrication and are for bolted or screwed field connections.

C. Field Welding: Comply with the following requirements:

1. Use materials and methods that minimize distortion and develop strength and corrosion resistance of base metals.
2. Obtain fusion without undercut or overlap.
3. Remove welding flux immediately.
4. At exposed connections, finish exposed welds and surfaces smooth and blended so no roughness shows after finishing and contour of welded surface matches that of adjacent surface.

D. Fastening to In-Place Construction: Provide anchorage devices and fasteners where metal fabrications are required to be fastened to in-place construction. Provide threaded fasteners for use with concrete and masonry inserts, toggle bolts, through bolts, lag screws, wood screws, and other connectors.

E. Provide temporary bracing or anchors in formwork for items that are to be built into concrete, masonry, or similar construction.

F. Corrosion Protection: Coat concealed surfaces of aluminum that come into contact with grout, concrete, masonry, wood, or dissimilar metals with the following:

1. Cast Aluminum: Heavy coat of bituminous paint.
2. Extruded Aluminum: Two coats of clear lacquer.

3.2 INSTALLING MISCELLANEOUS FRAMING AND SUPPORTS

A. General: Install framing and supports to comply with requirements of items being supported, including manufacturers' written instructions and requirements indicated on Shop Drawings.

B. Anchor supports for overhead doors securely to, and rigidly brace from, building structure.

C. Support steel girders on solid grouted masonry, concrete, or steel pipe columns. Secure girders with anchor bolts embedded in grouted masonry or concrete or with bolts through top plates of pipe columns.

1. Where grout space under bearing plates is indicated for girders supported on concrete or masonry, install as specified in "Installing Bearing and Leveling Plates" Article.

3.3 INSTALLING METAL BOLLARDS

A. Anchor bollards in place with concrete footings. Center and align bollards in holes 3 inches (75 mm) above bottom of excavation. Place concrete and vibrate or tamp for consolidation. Support and brace bollards in position until concrete has cured.

B. Exterior bollards shall extend to at frost depth. Interior bollards to extend 36” below finished floor.

C. Footing diameter shall be the bollard diameter plus 6 inches of concrete on both sides, but a minimum of 16 inches in diameter.

D. Fill bollards solidly with concrete, mounding top surface to shed water, with a smooth finish.

3.4 INSTALLING BEARING AND LEVELING PLATES

A. Clean concrete and masonry bearing surfaces of bond-reducing materials, and roughen to improve bond to surfaces. Clean bottom surface of plates.

B. Set bearing and leveling plates on wedges, shims, or leveling nuts. After bearing members have been positioned and plumbed, tighten anchor bolts. Do not remove wedges or shims but, if protruding, cut off flush with edge of bearing plate before packing with nonshrink grout. Pack grout solidly between bearing surfaces and plates to ensure that no voids remain.

3.5 ADJUSTING AND CLEANING

A. Gates: Adjust gates to operate smoothly, easily, and quietly, free of binding, warp, excessive deflection, distortion, nonalignment, misplacement, disruption, or malfunction, throughout entire operational range. Confirm that latches and locks engage accurately and securely without forcing or binding.

B. Touchup Painting: Immediately after erection, clean field welds, bolted connections, and abraded areas. Paint uncoated and abraded areas with the same material as used for shop painting to comply with SSPC-PA 1 for touching up shop-painted surfaces.

1. Apply by brush or spray to provide a minimum 2.0-mil (0.05-mm) dry film thickness.

C. Galvanized Surfaces: Clean field welds, bolted connections, and abraded areas and repair galvanizing to comply with ASTM A 780/A 780M.

END OF SECTION 055000

SECTION 055213 - PIPE AND TUBE RAILINGS

PART 1 - GENERAL

1.1 RELATED DOCUMENTS

A. Drawings and general provisions of the Contract, including General and Supplementary Conditions and Division 01 Specification Sections, apply to this Section.

1.2 SUMMARY

A. Section Includes:

1. Steel pipe and tube railings.

B. Related Sections:
1. Section 055100 – "Metal Stairs" for steel tube railings associated with metal pan stairs.

1.3 PERFORMANCE REQUIREMENTS

A. Delegated Design: Design railings, including comprehensive engineering analysis by a qualified professional engineer, using performance requirements and design criteria indicated.

B. General: In engineering railings to withstand structural loads indicated, determine allowable design working stresses of railing materials based on the following:

1. Steel: 72 percent of minimum yield strength.
2. Aluminum: The lesser of minimum yield strength divided by 1.65 or minimum ultimate tensile strength divided by 1.95.
3. Stainless Steel: 60 percent of minimum yield strength.

C. Structural Performance: Railings shall withstand the effects of gravity loads and the following loads and stresses within limits and under conditions indicated:

1. Handrails and Top Rails of Guards:

a. Uniform load of 50 lbf/ ft. (0.73 kN/m) applied in any direction.
b. Concentrated load of 200 lbf (0.89 kN) applied in any direction.
c. Uniform and concentrated loads need not be assumed to act concurrently.

2. Infill of Guards:

a. Concentrated load of 50 lbf (0.22 kN) applied horizontally on an area of 1 sq. ft. (0.093 sq. m).
b. Infill load and other loads need not be assumed to act concurrently.

D. Thermal Movements: Allow for thermal movements from ambient and surface temperature changes acting on exterior metal fabrications by preventing buckling, opening of joints, overstressing of components, failure of connections, and other detrimental effects.

1. Temperature Change: 120 deg F (67 deg C), ambient; 180 deg F (100 deg C), material surfaces.

E. Control of Corrosion: Prevent galvanic action and other forms of corrosion by insulating metals and other materials from direct contact with incompatible materials.

1.4 SUBMITTALS

A. Product Data: For the following:

1. Manufacturer's product lines of mechanically connected railings.
2. Railing brackets.
3. Grout, anchoring cement, and paint products.

B. Shop Drawings: Include plans, elevations, sections, details, and attachments to other work.

C. Delegated-Design Submittal: For installed products indicated to comply with performance requirements and design criteria, including analysis data signed and sealed by the qualified professional engineer responsible for their preparation.

D. Qualification Data: For qualified testing agency.

E. Welding certificates.

F. Paint Compatibility Certificates: From manufacturers of topcoats applied over shop primers certifying that shop primers are compatible with topcoats.

G. Product Test Reports: Based on evaluation of comprehensive tests performed by a qualified testing agency, according to ASTM E 894 and ASTM E 935.

1.5 QUALITY ASSURANCE

A. Welding Qualifications: Qualify procedures and personnel according to AWS D1.1/D1.1M, "Structural Welding Code - Steel."

B. Welding Qualifications: Qualify procedures and personnel according to the following:

1. AWS D1.1/D1.1M, "Structural Welding Code - Steel."

1.6 PROJECT CONDITIONS

A. Field Measurements: Verify actual locations of walls and other construction contiguous with metal fabrications by field measurements before fabrication.

1.7 COORDINATION AND SCHEDULING

A. Coordinate selection of shop primers with topcoats to be applied over them. Comply with paint and coating manufacturers' written recommendations to ensure that shop primers and topcoats are compatible with one another.

B. Coordinate installation of anchorages for railings. Furnish setting drawings, templates, and directions for installing anchorages, including sleeves, concrete inserts, anchor bolts, and items with integral anchors, that are to be embedded in concrete or masonry. Deliver such items to Project site in time for installation.

C. Schedule installation so wall attachments are made only to completed walls. Do not support railings temporarily by any means that do not satisfy structural performance requirements.

PART 2 - PRODUCTS

2.1 MANUFACTURERS

A. Manufacturers: Subject to compliance with requirements, available manufacturers offering products that may be incorporated into the Work include, but are not limited to, the following:

1. Steel Pipe and Tube Railings:

a. Pisor Industries, Inc.
b. Wagner, R & B, Inc.; a division of the Wagner Companies.

2.2 METALS, GENERAL

A. Metal Surfaces, General: Provide materials with smooth surfaces, without seam marks, roller marks, rolled trade names, stains, discolorations, or blemishes.

B. Brackets, Flanges, and Anchors: Cast or formed metal of same type of material and finish as supported rails unless otherwise indicated.

2.3 STEEL AND IRON

A. Recycled Content of Steel Products: Provide products with average recycled content of steel products so postconsumer recycled content plus one-half of preconsumer recycled content is not less than 25 percent.

B. Tubing: ASTM A 500 cold formed or ASTM A 513.

C. Pipe: ASTM A 53/A 53M, Type F or Type S, Grade A, Standard Weight (Schedule 40), unless another grade and weight are required by structural loads.

1. Provide galvanized finish for exterior installations and where indicated.

D. Plates, Shapes, and Bars: ASTM A 36/A 36M.

E. Cast Iron: Either gray iron, ASTM A 48/A 48M, or malleable iron, ASTM A 47/A 47M, unless otherwise indicated.

2.4 FASTENERS

A. General: Provide the following:

1. Ungalvanized-Steel Railings: Plated steel fasteners complying with ASTM B 633 or ASTM F 1941, Class Fe/Zn 5 for zinc coating.
2. Hot-Dip Galvanized Railings: Type 304 stainless-steel or hot-dip zinc-coated steel fasteners complying with ASTM A 153/A 153M or ASTM F 2329 for zinc coating.

B. Fasteners for Anchoring Railings to Other Construction: Select fasteners of type, grade, and class required to produce connections suitable for anchoring railings to other types of construction indicated and capable of withstanding design loads.

C. Fasteners for Interconnecting Railing Components:

1. Provide concealed fasteners for interconnecting railing components and for attaching them to other work, unless otherwise indicated.
2. Provide concealed fasteners for interconnecting railing components and for attaching them to other work, unless exposed fasteners are unavoidable or are the standard fastening method for railings indicated.
3. Provide Phillips flat-head machine screws for exposed fasteners unless otherwise indicated.

D. Post-Installed Anchors: Torque-controlled expansion anchors or chemical anchors capable of sustaining, without failure, a load equal to six times the load imposed when installed in unit masonry and four times the load imposed when installed in concrete, as determined by testing according to ASTM E 488, conducted by a qualified independent testing agency.

1. Material for Interior Locations: Carbon-steel components zinc-plated to comply with ASTM B 633 or ASTM F 1941 Class Fe/Zn 5, unless otherwise indicated.

2.5 MISCELLANEOUS MATERIALS

A. Welding Rods and Bare Electrodes: Select according to AWS specifications for metal alloy welded.

B. Etching Cleaner for Galvanized Metal: Complying with MPI#25.

C. Galvanizing Repair Paint: High-zinc-dust-content paint complying with SSPC-Paint 20 and compatible with paints specified to be used over it.

D. Shop Primers: Provide primers that comply with Division 09 painting Sections. Universal Shop Primer: Fast-curing, lead- and chromate-free, universal modified-alkyd primer complying with MPI#79 and compatible with topcoat.

1. Use primer containing pigments that make it easily distinguishable from zinc-rich primer.

E. Epoxy Zinc-Rich Primer: Complying with MPI#20 and compatible with topcoat.

1. Products: Subject to compliance with requirements, available products that may be incorporated into the Work include, but are not limited to, the following:

F. Shop Primer for Galvanized Steel: Vinyl wash primer complying with MPI#80.

G. Intermediate Coats and Topcoats: Provide products that comply with Division 09 painting Sections.

H. Epoxy Intermediate Coat: Complying with MPI #77 and compatible with primer and topcoat.

1. Products: Subject to compliance with requirements, available products that may be incorporated into the Work include, but are not limited to, the following:

I. Polyurethane Topcoat: Complying with MPI #72 and compatible with undercoat.

1. Products: Subject to compliance with requirements, available products that may be incorporated into the Work include, but are not limited to, the following:

J. Nonshrink, Nonmetallic Grout: Factory-packaged, nonstaining, noncorrosive, nongaseous grout complying with ASTM C 1107. Provide grout specifically recommended by manufacturer for interior and exterior applications.

K. Anchoring Cement: Factory-packaged, nonshrink, nonstaining, hydraulic-controlled expansion cement formulation for mixing with water at Project site to create pourable anchoring, patching, and grouting compound.

2.6 FABRICATION

A. General: Fabricate railings to comply with requirements indicated for design, dimensions, member sizes and spacing, details, finish, and anchorage, but not less than that required to support structural loads.

B. Assemble railings in the shop to greatest extent possible to minimize field splicing and assembly. Disassemble units only as necessary for shipping and handling limitations. Clearly mark units for reassembly and coordinated installation. Use connections that maintain structural value of joined pieces.

C. Cut, drill, and punch metals cleanly and accurately. Remove burrs and ease edges to a radius of approximately 1/32 inch unless otherwise indicated. Remove sharp or rough areas on exposed surfaces.

D. Form work true to line and level with accurate angles and surfaces.

E. Fabricate connections that will be exposed to weather in a manner to exclude water. Provide weep holes where water may accumulate.

F. Cut, reinforce, drill, and tap as indicated to receive finish hardware, screws, and similar items.

G. Connections: Fabricate railings with welded connections unless otherwise indicated.

H. Welded Connections: Cope components at connections to provide close fit, or use fittings designed for this purpose. Weld all around at connections, including at fittings.

1. Use materials and methods that minimize distortion and develop strength and corrosion resistance of base metals.
2. Obtain fusion without undercut or overlap.
3. Remove flux immediately.
4. At exposed connections, finish exposed surfaces smooth and blended so no roughness shows after finishing and welded surface matches contours of adjoining surfaces.

I. Welded Connections for Aluminum Pipe: Fabricate railings to interconnect members with concealed internal welds that eliminate surface grinding, using manufacturer's standard system of sleeve and socket fittings.

J. Nonwelded Connections: Connect members with concealed mechanical fasteners and fittings. Fabricate members and fittings to produce flush, smooth, rigid, hairline joints.

1. Fabricate splice joints for field connection using an epoxy structural adhesive if this is manufacturer's standard splicing method.

K. Form changes in direction as follows:

1. As detailed.

L. Bend members in jigs to produce uniform curvature for each configuration required; maintain cross section of member throughout entire bend without buckling, twisting, cracking, or otherwise deforming exposed surfaces of components.

M. Close exposed ends of railing members with prefabricated end fittings.

N. Provide wall returns at ends of wall-mounted handrails unless otherwise indicated. Close ends of returns unless clearance between end of rail and wall is 1/4 inch or less.

O. Brackets, Flanges, Fittings, and Anchors: Provide wall brackets, flanges, miscellaneous fittings, and anchors to interconnect railing members to other work unless otherwise indicated.

1. At brackets and fittings fastened to plaster or gypsum board partitions, provide crush-resistant fillers, or other means to transfer loads through wall finishes to structural supports and prevent bracket or fitting rotation and crushing of substrate.

P. Provide inserts and other anchorage devices for connecting railings to concrete or masonry work. Fabricate anchorage devices capable of withstanding loads imposed by railings. Coordinate anchorage devices with supporting structure.

Q. For railing posts set in concrete, provide stainless-steel sleeves not less than 6 inches long with inside dimensions not less than 1/2 inch greater than outside dimensions of post, with metal plate forming bottom closure.

2.7 FINISHES, GENERAL

A. Comply with NAAMM's "Metal Finishes Manual for Architectural and Metal Products" for recommendations for applying and designating finishes.

B. Protect mechanical finishes on exposed surfaces from damage by applying a strippable, temporary protective covering before shipping.

C. Appearance of Finished Work: Variations in appearance of abutting or adjacent pieces are acceptable if they are within one-half of the range of approved Samples. Noticeable variations in the same piece are not acceptable. Variations in appearance of other components are acceptable if they are within the range of approved Samples and are assembled or installed to minimize contrast.

D. Provide exposed fasteners with finish matching appearance, including color and texture, of railings.

2.8 STEEL AND IRON FINISHES

A. Galvanized Railings:

1. Hot-dip galvanize exterior steel and iron railings, including hardware, after fabrication.
2. Hot-dip galvanize indicated steel and iron railings, including hardware, after fabrication.
3. Comply with ASTM A 123/A 123M for hot-dip galvanized railings.
4. Comply with ASTM A 153/A 153M for hot-dip galvanized hardware.
5. Do not quench or apply post galvanizing treatments that might interfere with paint adhesion.
6. Fill vent and drain holes that will be exposed in the finished Work, unless indicated to remain as weep holes, by plugging with zinc solder and filing off smooth.

B. For galvanized railings, provide hot-dip galvanized fittings, brackets, fasteners, sleeves, and other ferrous components.

C. Preparing Galvanized Railings for Shop Priming: After galvanizing, thoroughly clean railings of grease, dirt, oil, flux, and other foreign matter, and treat with etching cleaner.

D. For nongalvanized steel railings, provide nongalvanized ferrous-metal fittings, brackets, fasteners, and sleeves, except galvanize anchors to be embedded in exterior concrete or masonry.

E. Preparation for Shop Priming: Prepare uncoated ferrous-metal surfaces to comply with SSPC-SP 6/NACE No. 3, "Commercial Blast Cleaning" Retain or revise any of four subparagraphs below to suit Project service conditions of installed work. Insert other exposures and preparation requirements where applicable. Refer to SSPC's painting manual.

1. Exterior Railings: SSPC-SP 6/NACE No. 3, "Commercial Blast Cleaning."
2. Railings Indicated to Receive Zinc-Rich Primer: SSPC-SP 6/NACE No. 3, "Commercial Blast Cleaning."
3. Railings Indicated to Receive Primers Specified in Division 09 Section "High-Performance Coatings": SSPC-SP 6/NACE No. 3, "Commercial Blast Cleaning."
4. Other Railings: SSPC-SP 3, "Power Tool Cleaning."

F. Primer Application: Apply shop primer to prepared surfaces of railings unless otherwise indicated. Comply with requirements in SSPC-PA 1, "Paint Application Specification No. 1: Shop, Field, and Maintenance Painting of Steel," for shop painting. Primer need not be applied to surfaces to be embedded in concrete or masonry.

1. Shop prime uncoated railings with universal shop primer indicated.
2. Do not apply primer to galvanized surfaces.

G. Shop-Painted Finish: Comply with Division 09 Section "Exterior Painting"

1. Color: As selected by Architect from manufacturer's full range.

H. High-Performance Coating: Apply epoxy intermediate and polyurethane topcoats to prime-coated surfaces. Comply with coating manufacturer's written instructions and with requirements in SSPC-PA 1, "Paint Application Specification No. 1: Shop, Field, and Maintenance Painting of Steel," for shop painting. Apply at spreading rates recommended by coating manufacturer.

1. Color: As selected by Architect from manufacturer's full range.

PART 3 - EXECUTION

3.1 EXAMINATION

A. Examine plaster and gypsum board assemblies, where reinforced to receive anchors, to verify that locations of concealed reinforcements have been clearly marked for Installer. Locate reinforcements and mark locations if not already done.

3.2 INSTALLATION, GENERAL

A. Fit exposed connections together to form tight, hairline joints.

B. Perform cutting, drilling, and fitting required for installing railings. Set railings accurately in location, alignment, and elevation; measured from established lines and levels and free of rack.

1. Do not weld, cut, or abrade surfaces of railing components that have been coated or finished after fabrication and that are intended for field connection by mechanical or other means without further cutting or fitting.
2. Set posts plumb within a tolerance of 1/16 inch in 3 feet .
3. Align rails so variations from level for horizontal members and variations from parallel with rake of steps and ramps for sloping members do not exceed 1/4 inch in 12 feet.

C. Corrosion Protection: Coat concealed surfaces of aluminum that will be in contact with grout, concrete, masonry, wood, or dissimilar metals, with a heavy coat of bituminous paint.

D. Adjust railings before anchoring to ensure matching alignment at abutting joints.

E. Fastening to In-Place Construction: Use anchorage devices and fasteners where necessary for securing railings and for properly transferring loads to in-place construction.

3.3 RAILING CONNECTIONS

A. Nonwelded Connections: Use mechanical or adhesive joints for permanently connecting railing components. Seal recessed holes of exposed locking screws using plastic cement filler colored to match finish of railings.

B. Welded Connections: Use fully welded joints for permanently connecting railing components. Comply with requirements for welded connections in "Fabrication" Article whether welding is performed in the shop or in the field.

C. Expansion Joints: Install expansion joints at locations indicated but not farther apart than required to accommodate thermal movement. Provide slip-joint internal sleeve extending 2 inches beyond joint on either side, fasten internal sleeve securely to one side, and locate joint within 6 inches of post.

3.4 ANCHORING POSTS

A. Use metal sleeves preset and anchored into concrete for installing posts. After posts have been inserted into sleeves, fill annular space between post and sleeve with nonshrink, nonmetallic grout or anchoring cement, mixed and placed to comply with anchoring material manufacturer's written instructions.

B. Form or core-drill holes not less than 5 inches deep and 3/4 inch larger than OD of post for installing posts in concrete. Clean holes of loose material, insert posts, and fill annular space between post and concrete with nonshrink, nonmetallic grout or anchoring cement, mixed and placed to comply with anchoring material manufacturer's written instructions.

C. Cover anchorage joint with flange of same metal as post, welded to post after placing anchoring material.

D. Leave anchorage joint exposed with 1/8-inch buildup, sloped away from post.

E. Anchor posts to metal surfaces with oval flanges, angle type, or floor type as required by conditions, connected to posts and to metal supporting members as follows:

1. For aluminum pipe railings, attach posts using fittings designed and engineered for this purpose.
2. For stainless-steel pipe railings, weld flanges to post and bolt to supporting surfaces.
3. For steel pipe railings, weld flanges to post and bolt to metal supporting surfaces.

F. Install removable railing sections, where indicated, in slip-fit metal sockets cast in concrete.

3.5 ATTACHING RAILINGS

A. Anchor railing ends at walls with round flanges anchored to wall construction and welded to railing ends.

B. Anchor railing ends to metal surfaces with flanges bolted to metal surfaces and welded to railing ends.

C. Attach railings to wall with wall brackets . Provide brackets with 1-1/2-inch clearance from inside face of handrail and finished wall surface. Locate brackets as indicated or, if not indicated, at spacing required to support structural loads.

1. Use type of bracket with predrilled hole for exposed bolt anchorage.
2. Locate brackets as indicated or, if not indicated, at spacing required to support structural loads.

D. Secure wall brackets and railing end flanges to building construction as follows:

1. For concrete and solid masonry anchorage, use drilled-in expansion shields and hanger or lag bolts.
2. For hollow masonry anchorage, use toggle bolts.
3. For steel-framed partitions, use self-tapping screws fastened to steel framing or to concealed steel reinforcements.
4. For steel-framed partitions, use toggle bolts installed through flanges of steel framing or through concealed steel reinforcements.

3.6 ADJUSTING AND CLEANING

A. Clean by washing thoroughly with clean water and soap and rinsing with clean water.

B. Touchup Painting: Immediately after erection, clean field welds, bolted connections, and abraded areas of shop paint, and paint exposed areas with the same material as used for shop painting to comply with SSPC-PA 1 for touching up shop-painted surfaces.

1. Apply by brush or spray to provide a minimum 2.0-mil dry film thickness.

C. Touchup Painting: Cleaning and touchup painting of field welds, bolted connections, and abraded areas of shop paint are specified in Division 09 painting Sections Galvanized Surfaces:

Clean field welds, bolted connections, and abraded areas and repair galvanizing to comply with ASTM A 780.

3.7 PROTECTION

A. Protect finishes of railings from damage during construction period with temporary protective coverings approved by railing manufacturer. Remove protective coverings at time of Substantial Completion.

END OF SECTION 055213

SECTION 061000 - ROUGH CARPENTRY

PART 1 - GENERAL

1.1 SUMMARY

A. Section Includes:

1. Wood products.
2. Wood-preservative-treated lumber.
3. Fire-retardant-treated lumber.
4. Miscellaneous lumber.
5. Plywood backing panels.

B. Related Requirements:

1. Section 061600 "Sheathing" for sheathing.

1.2 DEFINITIONS

A. Boards or Strips: Lumber of less than 2 inches nominal (38 mm actual) size in least dimension.

B. Dimension Lumber: Lumber of 2 inches nominal (38 mm actual) size or greater but less than 5 inches nominal (114 mm actual) size in least dimension.

C. Exposed Framing: Framing not concealed by other construction.

D. Lumber grading agencies, and abbreviations used to reference them, include the following:

1. NeLMA: Northeastern Lumber Manufacturers' Association.
2. NLGA: National Lumber Grades Authority.
3. SPIB: The Southern Pine Inspection Bureau.
4. WCLIB: West Coast Lumber Inspection Bureau.
5. WWPA: Western Wood Products Association.

1.3 ACTION SUBMITTALS

A. Product Data: For each type of process and factory-fabricated product. Indicate component materials and dimensions and include construction and application details.

1. Include data for wood-preservative treatment from chemical treatment manufacturer and certification by treating plant that treated materials comply with requirements. Indicate type of preservative used and net amount of preservative retained.
2. Include data for fire-retardant treatment from chemical treatment manufacturer and certification by treating plant that treated materials comply with requirements. Include

physical properties of treated materials based on testing by a qualified independent testing agency.

3. For fire-retardant treatments, include physical properties of treated lumber both before and after exposure to elevated temperatures, based on testing by a qualified independent testing agency in accordance with ASTM D5664.
4. For products receiving a waterborne treatment, include statement that moisture content of treated materials was reduced to levels specified before shipment to Project site.

1.4 INFORMATIONAL SUBMITTALS

A. Material Certificates:

1. For dimension lumber specified to comply with minimum allowable unit stresses. Indicate species and grade selected for each use and design values approved by the ALSC Board of Review.
2. For preservative-treated wood products. Indicate type of preservative used and net amount of preservative retained.

1.5 DELIVERY, STORAGE, AND HANDLING

A. Stack wood products flat with spacers beneath and between each bundle to provide air circulation. Protect wood products from weather by covering with waterproof sheeting, securely anchored. Provide for air circulation around stacks and under coverings.

PART 2 - PRODUCTS

2.1 WOOD PRODUCTS

A. Lumber: Comply with DOC PS 20 and applicable rules of grading agencies indicated. If no grading agency is indicated, comply with the applicable rules of any rules-writing agency certified by the ALSC Board of Review. Grade lumber by an agency certified by the ALSC Board of Review to inspect and grade lumber under the rules indicated.

1. Factory mark each piece of lumber with grade stamp of grading agency.
2. For exposed lumber indicated to receive a stained or natural finish, mark grade stamp on end or back of each piece.
3. Where nominal sizes are indicated, provide actual sizes required by DOC PS 20 for moisture content specified. Where actual sizes are indicated, they are minimum dressed sizes for dry wood products.
4. Dress lumber, S4S, unless otherwise indicated.

B. Maximum Moisture Content:

1. Boards: 15 percent.
2. Dimension Lumber: 19 percent for 2-inch nominal (38-mm actual) thickness or less; no limit for more than 2-inch nominal (38-mm actual) thickness unless otherwise indicated.

2.2 WOOD-PRESERVATIVE-TREATED MATERIALS

A. Preservative Treatment by Pressure Process: AWPA U1; Use Category UC2 for interior construction not in contact with the ground, Use Category UC3b for exterior construction not in contact with the ground, and Use Category UC4a for items in contact with the ground.

1. Preservative Chemicals: Acceptable to authorities having jurisdiction and containing no arsenic or chromium.
2. For exposed items indicated to receive a stained or natural finish, use chemical formulations that do not require incising, contain colorants, bleed through, or otherwise adversely affect finishes.

B. Kiln-dry lumber after treatment to a maximum moisture content of 19 percent. Do not use material that is warped or does not comply with requirements for untreated material.

C. Mark lumber with treatment quality mark of an inspection agency approved by the ALSC Board of Review.

1. For exposed lumber indicated to receive a stained or natural finish, mark end or back of each piece or omit marking and provide certificates of treatment compliance issued by inspection agency.

D. Application: Treat items indicated on Drawings, and the following:

1. Wood nailers, curbs, equipment support bases, blocking, stripping, and similar members in connection with roofing, flashing, vapor barriers, and waterproofing.
2. Wood sills, sleepers, blocking, furring, stripping, and similar concealed members in contact with masonry or concrete.
3. Wood framing and furring attached directly to the interior of below-grade exterior masonry or concrete walls.
4. Wood floor plates that are installed over concrete slabs-on-grade.

2.3 FIRE-RETARDANT-TREATED LUMBER

A. General: Where fire-retardant-treated materials are indicated, materials are to comply with requirements in this article, that are acceptable to authorities having jurisdiction, and with fire-test-response characteristics specified as determined by testing identical products per test method indicated by a qualified testing agency.

B. Fire-Retardant-Treated Lumber and Plywood by Pressure Process: Products with a flame-spread index of 25 or less when tested in accordance with ASTM E84, and with no evidence of significant progressive combustion when the test is extended an additional 20 minutes, and with the flame front not extending more than 10.5 feet (3.2 m) beyond the centerline of the burners at any time during the test.

1. Treatment is not to promote corrosion of metal fasteners.
2. Exterior Type: Treated materials are to comply with requirements specified above for fire-retardant-treated lumber and plywood by pressure process after being subjected to

accelerated weathering in accordance with ASTM D2898. Use for exterior locations and where indicated.

3. Interior Type A: Treated materials are to have a moisture content of 28 percent or less when tested in accordance with ASTM D3201/D3201M at 92 percent relative humidity. Use where exterior type is not indicated.

C. Kiln-dry lumber after treatment to maximum moisture content of 19 percent. Kiln-dry plywood after treatment to maximum moisture content of 15 percent.

D. Identify fire-retardant-treated wood with appropriate classification marking of qualified testing agency and other information required by authorities having jurisdiction.

1. For exposed lumber indicated to receive a stained or natural finish, mark end or back of each piece.

E. For exposed items indicated to receive a stained or natural finish, chemical formulations are not to bleed through, contain colorants, or otherwise adversely affect finishes.

F. Application: Treat items indicated on Drawings, and the following:
1. Concealed blocking.
2. Wood cants, nailers, curbs, equipment support bases, blocking, and similar members in connection with roofing.
3. Plywood backing panels.

2.4 MISCELLANEOUS LUMBER

A. Provide miscellaneous lumber indicated and lumber for support or attachment of other construction, including the following:

1. Blocking.
2. Nailers.
3. Rooftop equipment bases and support curbs.
4. Cants.
5. Furring.
6. Grounds.
7. Utility shelving.

B. Dimension Lumber Items: Construction or No. 2 grade lumber of any of the following species:

1. Hem-fir (north); NLGA.
2. Mixed southern pine or southern pine; SPIB.
3. Spruce-pine-fir; NLGA.

C. Concealed Boards: 15 percent maximum moisture content and any of the following species and grades:

1. Mixed southern pine or southern pine; No. [**2**] [**3**] grade; SPIB.
2. Hem-fir or hem-fir (north); Construction or No. 2 Common grade; NLGA, WCLIB, or WWPA.

3. Spruce-pine-fir (south) or spruce-pine-fir; Construction or No. 2 Common grade; NeLMA, NLGA, WCLIB, or WWPA.

D. Roofing Nailers: Structural- or No. 2-grade lumber or better; kiln-dried Douglas fir, southern pine, or wood having similar decay-resistant properties.

E. For blocking not used for attachment of other construction, Utility, Stud, or No. 3 grade lumber of any species may be used provided that it is cut and selected to eliminate defects that will interfere with its attachment and purpose.

F. For furring strips for installing plywood or hardboard paneling, select boards with no knots capable of producing bent-over nails and damage to paneling.

2.5 PLYWOOD BACKING AND MISCELLANEOUS PANELS

A. Equipment Backing Panels: DOC PS 1, Exterior, AC, fire-retardant treated, in thickness indicated or, if not indicated, not less than 3/4-inch (19-mm) nominal thickness.

B. Miscellaneous Panels: DOC PS 1, Exterior, AC, fire-retardant treated, in thickness indicated or, if not indicated, not less than 3/4-inch (19-mm) nominal thickness.

C. Flexible Plywood Backing System: Danback® Flexible Wood Backing System by Clark Dietrich. Fire-retardant treated, ¾ inch thick CDX plywood.

2.6 FASTENERS

A. General: Fasteners are to be of size and type indicated and comply with requirements specified in this article for material and manufacture. Provide nails or screws, in sufficient length, to penetrate not less than 1-1/2 inches (38 mm) into wood substrate.

1. Where rough carpentry is exposed to weather, in ground contact, pressure-preservative treated, or in area of high relative humidity, provide fasteners with hot-dip zinc coating complying with ASTM A153/A153M or ASTM F2329.

B. Nails, Brads, and Staples: ASTM F1667.

C. Power-Driven Fasteners: Fastener systems with an evaluation report acceptable to authorities having jurisdiction, based on ICC-ES AC70.

D. Post-Installed Anchors: Fastener systems with an evaluation report acceptable to authorities having jurisdiction, based on ICC-ES AC01 ICC-ES AC58 ICC-ES AC193 or ICC-ES AC308 as appropriate for the substrate.

2.7 MISCELLANEOUS MATERIALS

A. Adhesives for Gluing Furring and Sleepers to Concrete or Masonry: Formulation complying with ASTM D3498 that is approved for use indicated by adhesive manufacturer.

1. Verify adhesives have a VOC content of 70 g/L or less.

B. Water-Repellent Preservative: NWWDA-tested and -accepted formulation containing 3-iodo-2-propynyl butyl carbamate, combined with an insecticide containing chloropyrifos as its active ingredient.

PART 3 - EXECUTION

3.1 INSTALLATION

A. Framing Standard: Comply with AF&PA's WCD 1, "Details for Conventional Wood Frame Construction," unless otherwise indicated.

B. Set work to required levels and lines, with members plumb, true to line, cut, and fitted. Fit rough carpentry accurately to other construction. Locate furring, nailers, blocking, and similar supports to comply with requirements for attaching other construction.

C. Install plywood backing panels by fastening to studs; coordinate locations with utilities requiring backing panels. Install fire-retardant-treated plywood backing panels with classification marking of testing agency exposed to view.

D. Do not splice structural members between supports unless otherwise indicated.

E. Provide blocking and framing as indicated and as required to support facing materials, fixtures, specialty items, and trim.

1. Provide metal clips for fastening gypsum board or lath at corners and intersections where framing or blocking does not provide a surface for fastening edges of panels. Space clips not more than 16 inches (406 mm) o.c.

F. Sort and select lumber so that natural characteristics do not interfere with installation or with fastening other materials to lumber. Do not use materials with defects that interfere with function of member or pieces that are too small to use with minimum number of joints or optimum joint arrangement.

G. Comply with AWPA M4 for applying field treatment to cut surfaces of preservative-treated lumber.

1. Use inorganic boron for items that are continuously protected from liquid water.
2. Use copper naphthenate for items not continuously protected from liquid water.

H. Where wood-preservative-treated lumber is installed adjacent to metal decking, install continuous flexible flashing separator between wood and metal decking.

I. Securely attach rough carpentry work to substrate by anchoring and fastening as indicated, complying with the following:

1. Table 2304.10.1, "Fastening Schedule," in ICC's International Building Code (IBC).

2. Table R602.3(1), "Fastener Schedule for Structural Members," and Table R602.3(2), "Alternate Attachments," in ICC's International Residential Code for One- and Two-Family Dwellings.
3. ICC-ES evaluation report for fastener.

J. Securely attach roofing nailers to substrates by anchoring and fastening to withstand bending, shear, or other stresses imparted by Project wind loads and fastener-resistance loads as designed in accordance with ASCE/SEI 7.

K. Use steel common nails unless otherwise indicated. Select fasteners of size that will not fully penetrate members where opposite side will be exposed to view or will receive finish materials. Make tight connections between members. Install fasteners without splitting wood. Drive nails snug but do not countersink nail heads unless otherwise indicated.

3.2 INSTALLATION OF WOOD BLOCKING AND NAILERS

A. Install where indicated and where required for attaching other work. Form to shapes indicated and cut as required for true line and level of attached work. Coordinate locations with other work involved.

B. Attach wood blocking to substrates to support applied loading. Recess bolts and nuts flush with surfaces unless otherwise indicated.

C. Provide permanent grounds of dressed, pressure-preservative-treated, key-beveled lumber not less than 1-1/2 inches (38 mm) wide and of thickness required to bring face of ground to exact thickness of finish material. Remove temporary grounds when no longer required.

D. Roof and Coping Blocking:

1. Anchor to resist uplift and outward forces in accordance with recommendations in FM Global Property Loss Prevention Data Sheet 1-49 for specified FM Approvals' listing for required windstorm classification.

3.3 INSTALLATION OF WOOD FURRING

A. Install level and plumb with closure strips at edges and openings. Shim with wood as required for tolerance of finish work.

B. Furring to Receive Plywood or Hardboard Paneling: Install 1-by-3-inch nominal- (19-by-63-mm actual-) size furring horizontally and vertically at 24 inches (610 mm) o.c.

3.4 PROTECTION

A. Protect wood that has been treated with inorganic boron (SBX) from weather. If, despite protection, inorganic boron-treated wood becomes wet, apply EPA-registered borate treatment. Apply borate solution by spraying to comply with EPA-registered label.

END OF SECTION 061000

SECTION 061600 - SHEATHING

PART 1 - GENERAL

1.1 RELATED DOCUMENTS

A. Drawings and general provisions of the Contract, including General and Supplementary Conditions and Division 01 Specification Sections, apply to this Section.

1.2 SUMMARY

A. Section Includes:

1. Wall sheathing.

B. Related Requirements:

1. Section 061000 "Rough Carpentry" for plywood backing panels.

1.3 ACTION SUBMITTALS

A. Product Data: For each type of process and factory-fabricated product. Indicate component materials and dimensions and include construction and application details.

1. Include data for wood-preservative treatment from chemical treatment manufacturer and certification by treating plant that treated plywood complies with requirements. Indicate type of preservative used and net amount of preservative retained.
2. Include data for fire-retardant treatment from chemical treatment manufacturer and certification by treating plant that treated plywood complies with requirements. Include physical properties of treated materials.
3. For fire-retardant treatments, include physical properties of treated plywood both before and after exposure to elevated temperatures, based on testing by a qualified independent testing agency according to ASTM D 5516.
4. For products receiving waterborne treatment, include statement that moisture content of treated materials was reduced to levels specified before shipment to Project site.

1.4 QUALITY ASSURANCE

A. Testing Agency Qualifications: For testing agency providing classification marking for fire-retardant-treated material, an inspection agency acceptable to authorities having jurisdiction that periodically performs inspections to verify that the material bearing the classification marking is representative of the material tested.

1.5 DELIVERY, STORAGE, AND HANDLING

A. Stack panels flat with spacers beneath and between each bundle to provide air circulation. Protect sheathing from weather by covering with waterproof sheeting, securely anchored. Provide for air circulation around stacks and under coverings.

PART 2 - PRODUCTS

2.1 PERFORMANCE REQUIREMENTS

A. Fire-Resistance Ratings: As tested according to ASTM E 119; testing by a qualified testing agency. Identify products with appropriate markings of applicable testing agency.

1. Fire-Resistance Ratings: Indicated by design designations from UL's "Fire Resistance Directory" or from the listings of another qualified testing agency.

2.2 WOOD PANEL PRODUCTS

A. Emissions: Products shall meet the testing and product requirements of the California Department of Public Health's "Standard Method for the Testing and Evaluation of Volatile Organic Chemical Emissions from Indoor Sources Using Environmental Chambers."

B. Thickness: As needed to comply with requirements specified, but not less than thickness indicated.

C. Factory mark panels to indicate compliance with applicable standard.

2.3 PRESERVATIVE-TREATED PLYWOOD

A. Preservative Treatment by Pressure Process: AWPA U1; Use Category UC2 for interior construction not in contact with ground, Use Category UC3b for exterior construction not in contact with ground, and Use Category UC4a for items in contact with ground.

1. Preservative Chemicals: Acceptable to authorities having jurisdiction and containing no arsenic or chromium.

B. Mark plywood with appropriate classification marking of an inspection agency acceptable to authorities having jurisdiction.

C. Application: Treat items indicated on Drawings and plywood in contact with masonry or concrete or used with roofing, flashing, vapor barriers, and waterproofing.

2.4 WALL SHEATHING

A. Glass-Mat Gypsum Sheathing: ASTM C 1177/1177M.

1. Manufacturers: Subject to compliance with requirements, provide products by one of the following:

2. Products: Subject to compliance with requirements, provide one of the following:

   a. CertainTeed Corporation; GlasRoc.
   b. Georgia-Pacific Building Products; Dens-Glass Gold.
   c. National Gypsum Company; Gold Bond eXP Extended Exposure Sheathing.
   d. USG Corporation; Securock.

3. Type and Thickness: Type X, 5/8 inch (15.9 mm) thick.
4. Size: 48 by 96 inches (1219 by 2438 mm) for vertical installation.

B. Cementitious Backer Units: ASTM C1325, Type A.

1. Products: Subject to compliance with requirements, provide one of the following:

   a. Custom Building Products; Wonder Board.
   b. National Gypsum; Permabase.
   c. USG Corporation; DUROCK Cement Board.
2. Thickness: 1/2 inch (12.7 mm).

2.5 FASTENERS

A. General: Provide fasteners of size and type indicated that comply with requirements specified in this article for material and manufacture.
   1. For roof and wall sheathing, provide fasteners with organic-polymer or other corrosion-protective coating having a salt-spray resistance of more than 800 hours according to ASTM B 117.

B. Nails, Brads, and Staples: ASTM F 1667.

C. Power-Driven Fasteners: Fastener systems with an evaluation report acceptable to authorities having jurisdiction, based on ICC-ES AC70.

PART 3 - EXECUTION

3.1 INSTALLATION, GENERAL

A. Do not use materials with defects that impair quality of sheathing or pieces that are too small to use with minimum number of joints or optimum joint arrangement. Arrange joints so that pieces do not span between fewer than three support members.

B. Cut panels at penetrations, edges, and other obstructions of work; fit tightly against abutting construction unless otherwise indicated.

C. Securely attach to substrate by fastening as indicated, complying with the following:

1. Table 2304.9.1, "Fastening Schedule," in the ICC's International Building Code.
2. ICC-ES evaluation report for fastener.

D. Use common wire nails unless otherwise indicated. Select fasteners of size that will not fully penetrate members where opposite side will be exposed to view or will receive finish materials. Make tight connections. Install fasteners without splitting wood.

E. Coordinate wall and roof sheathing installation with flashing and joint-sealant installation so these materials are installed in sequence and manner that prevent exterior moisture from passing through completed assembly.

F. Do not bridge building expansion joints; cut and space edges of panels to match spacing of structural support elements.

G. Coordinate sheathing installation with installation of materials installed over sheathing so sheathing is not exposed to precipitation or left exposed at end of the workday when rain is forecast.

3.2 GYPSUM SHEATHING INSTALLATION

A. Comply with GA-253 and with manufacturer's written instructions.
1. Fasten gypsum sheathing to cold-formed metal framing with screws.
2. Install panels with a 3/8-inch (9.5-mm) gap where non-load-bearing construction abuts structural elements.
3. Install panels with a 1/4-inch (6.4-mm) gap where they abut masonry or similar materials that might retain moisture, to prevent wicking.

B. Apply fasteners so heads bear tightly against face of sheathing, but do not cut into facing.

C. Cut tightly to penetrating items.

D. Horizontal Installation: Install sheathing with V-grooved edge down and tongue edge up. Interlock tongue with groove to bring long edges in contact with edges of adjacent panels without forcing. Abut ends over centers of studs, and stagger end joints of adjacent panels not less than one stud spacing. Attach at perimeter and within field of panel to each stud.

1. Space fasteners approximately 8 inches (200 mm) o.c. and set back a minimum of 3/8 inch (9.5 mm) from edges and ends of panels.

E. Vertical Installation: Install vertical edges centered over studs. Abut ends and edges with those of adjacent panels. Attach at perimeter and within field of panel to each stud.

1. Space fasteners approximately 8 inches (200 mm) o.c. and set back a minimum of 3/8 inch (9.5 mm) from edges and ends of panels.

3.3 CEMENTITIOUS BACKER UNIT INSTALLATION

A. Install panels and treat joints according to ANSI A108.11 and manufacturer's written instructions for type of application indicated.

END OF SECTION 061600

SECTION 064116 - PLASTIC-LAMINATE-CLAD CABINETS AND CASEWORK

PART 1 - GENERAL

1.1 RELATED DOCUMENTS

A. Drawings and general provisions of the Contract, including General and Supplementary Conditions and Division 01 Specification Sections, apply to this Section.

1.2 SUMMARY

A. Section Includes:

1. Plastic-laminate-faced architectural cabinets/millwork.
2. Mail Slots.
3. Recycle bins.
4. Wood furring, blocking, shims, and hanging strips for installing plastic-laminate-faced architectural cabinets that are not concealed within other construction.

B. Related Requirements:

1. Section 061000 "Rough Carpentry" for wood furring, blocking, shims, and hanging strips required for installing cabinets that are concealed within other construction before cabinet installation.
2. Section 123661.16 "Solid Surfacing Countertops."

1.3 COORDINATION

A. Coordinate sizes and locations of framing, blocking, furring, reinforcements, and other related units of Work specified in other Sections to support loads imposed by installed and fully loaded cabinets.

B. Coordinate access panel locations in Display Case for lighting electrical connections.

1.4 PREINSTALLATION MEETINGS

A. Preinstallation Conference: Conduct conference at Project site.

1.5 ACTION SUBMITTALS

A. Product Data: For each type of product.

1. Include data for fire-retardant treatment from chemical-treatment manufacturer and certification by treating plant that treated materials comply with requirements.

B. Shop Drawings: For plastic-laminate-faced architectural cabinets.

1. Include plans, elevations, sections, and attachment details.
2. Show large-scale details.
3. Show locations and sizes of furring, blocking, and hanging strips, including concealed blocking and reinforcement specified in other Sections.
4. Show locations and sizes of cutouts and holes for items installed in plastic-laminate architectural cabinets.

C. Samples: For each exposed product and for each color and texture specified, in manufacturer's or fabricator's standard size.

1.6 INFORMATIONAL SUBMITTALS

A. Qualification Data: For Installer and fabricator.

B. Product Certificates: For the following:

1. Composite wood and agrifiber products.
2. Thermoset decorative panels.
3. High-pressure decorative laminate.
4. Adhesives.

C. Evaluation Reports: For fire-retardant-treated materials, from ICC-ES.

1.7 DELIVERY, STORAGE, AND HANDLING

A. Do not deliver cabinets until painting and similar finish operations that might damage architectural cabinets have been completed in installation areas. Store cabinets in installation areas or in areas where environmental conditions comply with requirements specified in "Field Conditions" Article.

1.8 FIELD CONDITIONS

A. Environmental Limitations: Do not deliver or install cabinets until building is enclosed, wet-work is complete, and HVAC system is operating and maintaining temperature between 60 and 90 deg F (16 and 32 deg C) and relative humidity between 25 and 55 percent during the remainder of the construction period.

B. Field Measurements: Where cabinets are indicated to fit to other construction, verify dimensions of other construction by field measurements before fabrication, and indicate measurements on Shop Drawings. Coordinate fabrication schedule with construction progress to avoid delaying the Work.

1. Locate concealed framing, blocking, and reinforcements that support cabinets by field measurements before being enclosed/concealed by construction, and indicate measurements on Shop Drawings.

C. Established Dimensions: Where cabinets are indicated to fit to other construction, establish dimensions for areas where cabinets are to fit. Provide allowance for trimming at site, and coordinate construction to ensure that actual dimensions correspond to established dimensions.

PART 2 - PRODUCTS

2.1 PLASTIC-LAMINATE-FACED CABINETS AND CASEWORK

A. Quality Standard: Unless otherwise indicated, comply with the "Architectural Woodwork Standards" for grades of cabinets indicated for construction, finishes, installation, and other requirements.
   1. The Contract Documents contain requirements that are more stringent than the referenced quality standard. Comply with requirements of Contract Documents in addition to those of the referenced quality standard.

B. Grade: Custom.

C. Type of Construction: Frameless.

D. Door and Drawer-Front Style: Flush overlay.

E. High-Pressure Decorative Laminate: NEMA LD 3, grades as indicated or if not indicated, as required by quality standard.

F. Laminate Cladding for Exposed Surfaces:

   1. Horizontal Surfaces: Grade HGS.
   2. Vertical Surfaces: Grade VGS.
   3. Edges: PVC edge banding, 0.12 inch (3 mm) thick, matching laminate in color, pattern, and finish. On doors and drawers only.
   4. Pattern Direction: Vertically for drawer fronts, doors, and fixed panels.

G. Materials for Semiexposed Surfaces:

   1. Surfaces Other Than Drawer Bodies: Thermoset decorative panels.
      a. Edges of Thermoset Decorative Panel Shelves: PVC or polyester edge banding.
      b. For semiexposed backs of panels with exposed plastic-laminate surfaces, provide surface of high-pressure decorative laminate, NEMA LD 3, Grade CLS.

   2. Drawer Sides and Backs: Thermoset decorative panels with PVC or polyester edge banding.
   3. Drawer Bottoms: Thermoset decorative panels.

H. Concealed Backs of Panels with Exposed Plastic-Laminate Surfaces: High-pressure decorative laminate, NEMA LD 3, Grade BKL.

I. Drawer Construction: Fabricate with exposed fronts fastened to subfront with mounting screws from interior of body.

1. Join subfronts, backs, and sides with glued rabbeted joints supplemented by mechanical fasteners.

J. Colors, Patterns, and Finishes: Provide materials and products that result in colors and textures of exposed laminate surfaces complying with the following requirements:

1. As indicated on Finish Schedule.

2.2 WOOD MATERIALS

A. Wood Products: Provide materials that comply with requirements of referenced quality standard for each type of architectural cabinet and quality grade specified unless otherwise indicated.

1. Wood Moisture Content: 8 to 13 percent.

B. Composite Wood Products:

1. Medium-Density Fiberboard (MDF): ANSI A208.2.
2. Particleboard: ANSI A208.1, Grade M-2.
3. Straw-Based Particleboard: ANSI A208.1, Grade M-2, except for density.
4. Softwood Plywood: DOC PS 1, medium-density overlay.
5. Thermoset Decorative Panels: Particleboard or MDF finished with thermally fused, melamine-impregnated decorative paper and complying with requirements of NEMA LD 3, Grade VGL, for Test Methods 3.3, 3.4, 3.6, 3.8, and 3.10.

2.3 CABINET HARDWARE AND ACCESSORIES

A. General: Provide cabinet hardware and accessory materials associated with architectural cabinets except for items specified in Section 087100 "Door Hardware."

B. Frameless Concealed Hinges (European Type): BHMA A156.9, B01602, 170 degrees of opening.

C. Back-Mounted Pulls:
1. Everyone Millwork, Design 2R; GMP.D2R_0005
   a. Stainless Steel: Powder Coated, 5”.
      1) Black.

D. Adjustable Shelf Standards and Supports: BHMA A156.9, B04071; with shelf rests, B04081 BHMA A156.9, B04102; with shelf brackets, B04112.

E. Shelf Rests: BHMA A156.9, B04013; metal, two-pin type with shelf hold-down clip.

F. Drawer Slides: ANSI/BHMA A156.9

1. Grade 1HD-100 and Grade 1HD-200: Side mounted; full-extension type; zinc-plated-steel ball-bearing slides.

2. For drawers not more than 3 inches (75 mm) high and not more than 24 inches (600 mm) wide, provide Grade 2.
3. For drawers more than 3 inches (75 mm) high, but not more than 6 inches (150 mm) high and not more than 24 inches (600 mm) wide, provide Grade 1.
4. For drawers more than 6 inches (150 mm) high or more than 24 inches (600 mm) wide, provide Grade 1HD-200.
5. Motion Feature: Soft Close dampener.

G. Door Locks: BHMA A156.11, E07121.

H. Drawer Locks: BHMA A156.11, E07041.

I. Door and Drawer Silencers: BHMA A156.16, L03011.

J. Grommets for Cable Passage: 2-inch (51-mm) OD, molded-plastic grommets and matching plastic caps with slot for wire passage.

1. Color: Submit color chart to Architect.

K. Exposed Hardware Finishes: For exposed hardware, provide finish that complies with BHMA A156.18 for BHMA finish.
1. Black

L. For concealed hardware, provide manufacturer's standard finish that complies with product class requirements in BHMA A156.9.

M. Pullout Trash / Recycle Bins:
1. Rev-A-Shelf Aluminum Pullout Wast Container with Soft Close 5349 Series.
a. Sizes vary. Submit all proposed sizes in shop drawings.

2.4 MISCELLANEOUS MATERIALS

A. Furring, Blocking, Shims, and Hanging Strips: Fire-retardant-treated softwood lumber, kiln-dried to less than 15 percent moisture content.

B. Anchors: Select material, type, size, and finish required for each substrate for secure anchorage. Provide metal expansion sleeves or expansion bolts for post-installed anchors. Use nonferrous-metal or hot-dip galvanized anchors and inserts at inside face of exterior walls and at floors.

C. Adhesives: Do not use adhesives that contain urea formaldehyde.

D. Support brackets: Powder coated steel, 1/8 inch thick minimum. Properly sized to fit countertop width, and support a minimum of 300 lbs per bracket. Similar to A&M In-Wall Concealed Flat Brackets
1. Provide wood blocking in wall at all bracket locations.

2.5 FABRICATION

A. Fabricate architectural cabinets to dimensions, profiles, and details indicated.

B. Complete fabrication, including assembly and hardware application, to maximum extent possible before shipment to Project site. Disassemble components only as necessary for shipment and installation. Where necessary for fitting at site, provide ample allowance for scribing, trimming, and fitting.

1. Notify Architect seven days in advance of the dates and times architectural cabinet fabrication will be complete.
2. Trial fit assemblies at fabrication shop that cannot be shipped completely assembled. Install dowels, screws, bolted connectors, and other fastening devices that can be removed after trial fitting. Verify that various parts fit as intended and check measurements of assemblies against field measurements before disassembling for shipment.

C. Shop-cut openings to maximum extent possible to receive hardware, appliances, electrical work, and similar items. Locate openings accurately and use templates or roughing-in diagrams to produce accurately sized and shaped openings. Sand edges of cutouts to remove splinters and burrs.

PART 3 - EXECUTION

3.1 PREPARATION

A. Before installation, condition cabinets to humidity conditions in installation areas for not less than 72 hours.

B. Coordinate bullet resistant fiberglass panel installation with cabinetry and millwork.

3.2 INSTALLATION

A. Grade: Install cabinets to comply with quality standard grade of item to be installed.

B. Assemble cabinets and complete fabrication at Project site to extent that it was not completed in the shop.

C. Anchor cabinets to anchors or blocking built in or directly attached to substrates. Secure with wafer-head cabinet installation screws.

D. Install cabinets level, plumb, and true in line to a tolerance of 1/8 inch in 96 inches (3 mm in 2400 mm) using concealed shims.

1. Scribe and cut cabinets to fit adjoining work, refinish cut surfaces, and repair damaged finish at cuts.

2. Install cabinets without distortion so doors and drawers fit openings and are accurately aligned. Adjust hardware to center doors and drawers in openings and to provide unencumbered operation. Complete installation of hardware and accessory items as indicated.
3. Fasten wall cabinets through back, near top and bottom, and at ends not more than 16 inches (400 mm) o.c. with No. 10 wafer-head screws sized for not less than 1-1/2-inch (38-mm) penetration into wood framing, blocking, or hanging strips.

3.3 ADJUSTING AND CLEANING

A. Repair damaged and defective cabinets, where possible, to eliminate functional and visual defects. Where not possible to repair, replace architectural cabinets. Adjust joinery for uniform appearance.

B. Clean, lubricate, and adjust hardware.

C. Clean cabinets on exposed and semiexposed surfaces.

END OF SECTION 064116

SECTION 072100 - THERMAL INSULATION

PART 1 - GENERAL

1.1 RELATED DOCUMENTS

A. Drawings and general provisions of the Contract, including General and Supplementary Conditions and Division 01 Specification Sections, apply to this Section.

1.2 SUMMARY

A. Section Includes:

1. Extruded polystyrene foam-plastic board insulation.
2. Glass-fiber blanket insulation.

1.3 ACTION SUBMITTALS

A. Product Data: For the following:

1. Extruded polystyrene foam-plastic board insulation.
2. Mineral-wool board insulation.
3. Glass-fiber blanket insulation.

1.4 INFORMATIONAL SUBMITTALS

A. Installer's Certification: Listing type, manufacturer, and R-value of insulation installed in each element of the building thermal envelope.
1. Sign, date, and post the certification in a conspicuous location on Project site.

B. Product Test Reports: For each product, for tests performed by a qualified testing agency.

1.5 DELIVERY, STORAGE, AND HANDLING

A. Protect insulation materials from physical damage and from deterioration due to moisture, soiling, and other sources. Store inside and in a dry location. Comply with manufacturer's written instructions for handling, storing, and protecting during installation.

B. Protect foam-plastic board insulation as follows:

1. Do not expose to sunlight except to necessary extent for period of installation and concealment.
2. Protect against ignition at all times. Do not deliver foam-plastic board materials to Project site until just before installation time.

3. Quickly complete installation and concealment of foam-plastic board insulation in each area of construction.

PART 2 - PRODUCTS

2.1 EXTRUDED POLYSTYRENE FOAM-PLASTIC BOARD INSULATION

A. Extruded Polystyrene Board Insulation, Type IV: ASTM C578, Type IV, 25-psi (173-kPa) minimum compressive strength; unfaced.

1. Products: Subject to compliance with requirements, provide one of the following:

a. Dow Chemical Company (The);.
b. DuPont de Nemours, Inc.; InsulationStyrofoam™ Brand Scoreboard Extruded Polystyrene Foam Insulation.
c. Owens Corning; Foamular 250.

2. Flame-Spread Index: Not more than 25 when tested in accordance with ASTM E84.
3. Smoke-Developed Index: Not more than 450 when tested in accordance with ASTM E84.
4. Fire Propagation Characteristics: Passes NFPA 285 testing as part of an approved assembly.
5. Labeling: Provide identification of mark indicating R-value of each piece of insulation 12 inches (305 mm) and wider in width.

2.2 GLASS-FIBER BLANKET INSULATION

A. Glass-Fiber Blanket Insulation, Unfaced: ASTM C665, Type I; passing ASTM E136 for combustion characteristics.

1. Manufacturers: Subject to compliance with requirements, provide products by one of the following:

a. CertainTeed; SAINT-GOBAIN.
b. Johns Manville; a Berkshire Hathaway company.
c. Knauf Insulation.
d. Owens Corning.

2. Flame-Spread Index: Not more than 25 when tested in accordance with ASTM E84.
3. Smoke-Developed Index: Not more than 50 when tested in accordance with ASTM E84.
4. Labeling: Provide identification of mark indicating R-value of each piece of insulation 12 inches (305 mm) and wider in width.
5. R-Value: Minimum 13.

2.3 INSULATION FASTENERS

A. Adhesively Attached, Spindle-Type Anchors: Plate welded to projecting spindle; capable of holding insulation of specified thickness and weight securely in position with self-locking washer in place.
   1. Plate: Perforated, galvanized carbon-steel sheet, 0.030 inch (0.762 mm) thick by 2 inches (50 mm) square.
   2. Spindle: Copper-coated, low-carbon steel; fully annealed; 0.105 inch (2.67 mm) in diameter; length to suit depth of insulation.

2.4 ACCESSORIES

A. Insulation for Miscellaneous Voids:
   1. Spray Polyurethane Foam Insulation: ASTM C1029, Type II, closed cell, with maximum flame-spread and smoke-developed indexes of 75 and 450, respectively, per ASTM E84.

B. Adhesive for Bonding Insulation: Product compatible with insulation and air and water barrier materials, and with demonstrated capability to bond insulation securely to substrates without damaging insulation and substrates.

PART 3 - EXECUTION

3.1 PREPARATION

A. Clean substrates of substances that are harmful to insulation, including removing projections capable of puncturing insulation or vapor retarders, or that interfere with insulation attachment.

3.2 INSTALLATION, GENERAL

A. Comply with insulation manufacturer's written instructions applicable to products and applications.

B. Install insulation that is undamaged, dry, and unsoiled and that has not been left exposed to ice, rain, or snow at any time.

C. Install insulation with manufacturer's R-value label exposed after insulation is installed.

D. Extend insulation to envelop entire area to be insulated. Fit tightly around obstructions and fill voids with insulation. Remove projections that interfere with placement.

E. Provide sizes to fit applications and selected from manufacturer's standard thicknesses, widths, and lengths. Apply single layer of insulation units unless multiple layers are otherwise shown or required to make up total thickness or to achieve R-value.

3.3 INSTALLATION OF SLAB INSULATION

A. On vertical slab edge and foundation surfaces, set insulation units using manufacturer's recommended adhesive according to manufacturer's written instructions.

1. If not otherwise indicated, extend insulation a minimum of 24 inches (610 mm) below exterior grade line.

B. On horizontal surfaces, loosely lay insulation units according to manufacturer's written instructions. Stagger end joints and tightly abut insulation units.

1. If not otherwise indicated, extend insulation a minimum of 48 inches in from exterior walls.

3.4 INSTALLATION OF FOUNDATION WALL INSULATION

A. Butt panels together for tight fit.

B. Anchor Installation: Install board insulation on concrete substrates by adhesively attached, spindle-type insulation anchors as follows:

1. Fasten insulation anchors to concrete substrates with insulation anchor adhesive according to anchor manufacturer's written instructions.
2. Space anchors according to insulation manufacturer's written instructions for insulation type, thickness, and application.
3. Apply insulation standoffs to each spindle to create cavity width indicated on Drawings between concrete substrate and insulation.
4. After adhesive has dried, install board insulation by pressing insulation into position over spindles and securing it tightly in place with insulation-retaining washers, taking care not to compress insulation.
5. Where insulation will not be covered by other building materials, apply capped washers to tips of spindles.

C. Adhesive Installation: Install with adhesive or press into tacky waterproofing or dampproofing according to manufacturer's written instructions.

3.5 INSTALLATION OF CAVITY-WALL INSULATION

A. Foam-Plastic Board Insulation: Install pads of adhesive spaced approximately 24 inches (610 mm) o.c. both ways on inside face and as recommended by manufacturer.

1. Fit courses of insulation between wall ties and other obstructions, with edges butted tightly in both directions, and with faces flush.
2. Press units firmly against inside substrates.

3.6 INSTALLATION OF INSULATION IN FRAMED CONSTRUCTION

A. Blanket Insulation: Install in cavities formed by framing members according to the following requirements:

1. Use insulation widths and lengths that fill the cavities formed by framing members. If more than one length is required to fill the cavities, provide lengths that will produce a snug fit between ends.
2. Place insulation in cavities formed by framing members to produce a friction fit between edges of insulation and adjoining framing members.
3. Maintain 3-inch (76-mm) clearance of insulation around recessed lighting fixtures not rated for or protected from contact with insulation.
4. For metal-framed wall cavities where cavity heights exceed 96 inches (2438 mm), support unfaced blankets mechanically and support faced blankets by taping flanges of insulation to flanges of metal studs.

B. Miscellaneous Voids: Install insulation in miscellaneous voids and cavity spaces where required to prevent gaps in insulation using the following materials:
1. Spray Polyurethane Insulation: Apply according to manufacturer's written instructions.

3.7 PROTECTION

A. Protect installed insulation from damage due to harmful weather exposures, physical abuse, and other causes.

B. Provide temporary coverings or enclosures where insulation is subject to abuse and cannot be concealed and protected by permanent construction immediately after installation.

END OF SECTION 072100

SECTION 072726 - FLUID-APPLIED MEMBRANE AIR BARRIERS

PART 1 - GENERAL

1.1 SUMMARY

A. Section Includes:

1. Vapor-retarding, fluid-applied air barriers.
2. Vapor-permeable, fluid-applied air barriers.

B. Related Requirements:

1. Section 061600 "Sheathing" for wall sheathings and wall sheathing joint-and-penetration treatments.

1.2 DEFINITIONS

A. Air-Barrier Material: A primary element that provides a continuous barrier to the movement of air.

B. Air-Barrier Accessory: A transitional component of the air barrier that provides continuity.

C. Air-Barrier Assembly: The collection of air-barrier materials and accessories applied to an opaque wall, including joints and junctions to abutting construction, to control air movement through the wall.

1.3 PREINSTALLATION MEETINGS

A. Preinstallation Conference: Conduct conference at Project site.

1. Review air-barrier requirements and installation, special details, mockups, air-leakage and bond testing, air-barrier protection, and work scheduling that covers air barriers.

1.4 ACTION SUBMITTALS

A. Product Data: For each type of product.

1. Include manufacturer's written instructions for evaluating, preparing, and treating each substrate; technical data; dry film thickness; and tested physical and performance properties of products.

B. Sustainable Design Submittals:

1. Product Data: For coatings, indicating VOC content.

2. Laboratory Test Reports: For coatings, indicating compliance with requirements for low-emitting materials.

C. Shop Drawings: For air-barrier assemblies.

1. Show locations and extent of air-barrier materials, accessories, and assemblies specific to Project conditions.
2. Include details for substrate joints and cracks, counterflashing strips, penetrations, inside and outside corners, terminations, and tie-ins with adjoining construction.
3. Include details of interfaces with other materials that form part of air barrier.

1.5 INFORMATIONAL SUBMITTALS

A. Qualification Data: For Installer. Include list of ABAA-certified installers and supervisors employed by Installer, who work on Project.

B. Product Certificates: From air-barrier manufacturer, certifying compatibility of air barriers and accessory materials with Project materials that connect to or that come in contact with the barrier.

C. Product Test Reports: For each air-barrier assembly, for tests performed by a qualified testing agency.

D. Field quality-control reports.

1.6 QUALITY ASSURANCE

A. Installer Qualifications: An entity that employs installers and supervisors who are trained and approved by manufacturer.

1. Installer to be licensed by ABAA according to ABAA's Quality Assurance Program and to employ ABAA-certified installers and supervisors on Project.

B. Mockups: Build mockups to set quality standards for materials and execution.

1. Build integrated mockups of exterior wall assembly as indicated on Drawings, incorporating backup wall construction, external cladding, window, storefront, door frame and sill, insulation, ties and other penetrations, and flashing to demonstrate surface preparation, crack and joint treatment, application of air barriers, and sealing of gaps, terminations, and penetrations of air-barrier assembly.

a. Coordinate construction of mockups to permit inspection and testing of air barrier before external insulation and cladding are installed.
b. Include junction with roofing membrane, building corner condition, and foundation wall intersection.
c. If Architect determines mockups do not comply with requirements, reconstruct mockups and apply air barrier until mockups are approved.

2. Approval of mockups does not constitute approval of deviations from the Contract Documents contained in mockups unless Architect specifically approves such deviations in writing.
3. Subject to compliance with requirements, approved mockups may become part of the completed Work if undisturbed at time of Substantial Completion.

1.7 DELIVERY, STORAGE, AND HANDLING

A. Remove and replace liquid materials that cannot be applied within their stated shelf life.

B. Protect stored materials from direct sunlight.

1.8 FIELD CONDITIONS

A. Environmental Limitations: Apply air barrier within the range of ambient and substrate temperatures recommended in writing by air-barrier manufacturer.

1. Protect substrates from environmental conditions that affect air-barrier performance.
2. Do not apply air barrier to a damp or wet substrate or during snow, rain, fog, or mist.

PART 2 - PRODUCTS

2.1 MATERIALS

A. Source Limitations: Obtain primary air-barrier materials and air-barrier accessories from single source from single manufacturer.

B. VOC Content: 100 g/L or less.

C. Low-Emitting Materials: Verify products comply with the testing and product requirements of the California Department of Public Health's "Standard Method for the Testing and Evaluation of Volatile Organic Chemical Emissions from Indoor Sources Using Environmental Chambers."

2.2 PERFORMANCE REQUIREMENTS

A. Air-Barrier Performance: Air-barrier assembly and seals with adjacent construction to be capable of performing as a continuous air barrier and as a liquid-water drainage plane flashed to discharge to the exterior incidental condensation or water penetration. Air-barrier assemblies to be capable of accommodating substrate movement and of sealing substrate expansion and control joints, construction material changes, penetrations, tie-ins to installed waterproofing, and transitions at perimeter conditions without deterioration and air leakage exceeding specified limits.

B. Air-Barrier Assembly Air Leakage: Maximum 0.04 cfm/sq. ft. of surface area at 1.57 lbf/sq. ft. (0.2 L/s x sq. m of surface area at 75 Pa), when tested according to ASTM E2357.

2.3 HIGH-BUILD AIR BARRIERS, VAPOR RETARDING.
Vapor-retarding air barriers are generally located on the warm side of primary wall insulation.

A. High-Build, Vapor-Retarding Air Barrier Synthetic Polymer Type: Synthetic polymer membrane with an installed dry film thickness, according to manufacturer's written instructions, of 35 mils (0.9 mm) or thicker over smooth, void-free substrates.

1. Products: Subject to compliance with requirements, provide one of the following:

a. Carlisle Coatings & Waterproofing Inc; Fire Resist Barritech NP.
b. Henry Company; Air-Bloc 16MR.
c. W. R. Meadows, Inc; Air-Shield LSR.

B. Physical and Performance Properties:

1. Air Permeance: Maximum 0.004 cfm/sq. ft. of surface area at 1.57-lbf/sq. ft. (0.02 L/s x sq. m of surface area at 75-Pa) pressure difference; ASTM E2178.
2. Vapor Permeance: Maximum 0.1 perm (5.8 ng/Pa x s x sq. m); ASTM E96/E96M, Procedure B, Water Method.
3. Ultimate Elongation: Minimum 500 percent; ASTM D412, Die C.
4. Adhesion to Substrate: Minimum 16 lbf/sq. in. (110 kPa) when tested according to ASTM D4541.
5. Fire Propagation Characteristics: Passes NFPA 285 testing as part of an approved assembly.
6. UV Resistance: Can be exposed to sunlight for 30 days according to manufacturer's written instructions.

2.4 HIGH-BUILD AIR BARRIERS, VAPOR PERMEABLE
Contractor’s option to use a High-Build or Medium Build Air Barrier.

A. High-Build, Vapor-Permeable Air Barrier Synthetic Polymer Type: Synthetic polymer membrane with an installed dry film thickness, according to manufacturer's written instructions, of 35 mils (0.9 mm) or thicker over smooth, void-free substrates.

1. Products: Subject to compliance with requirements, provide one of the following:

a. DuPont de Nemours, Inc.; DuPont™ Sealant for Tyvek® Fluid Applied System.

b. GCP Applied Technologies Inc. (formerly Grace Construction Products); Perm-A-Barrier VPL LT
c. Henry Company; Air Block 17MR.
d. Tremco Incorporated; ExoAir 230.

B. Physical and Performance Properties:

1. Air Permeance: Maximum 0.004 cfm/sq. ft. of surface area at 1.57-lbf/sq. ft. (0.02 L/s x sq. m of surface area at 75-Pa) pressure difference; ASTM E2178.
2. Vapor Permeance: Minimum 10 Perms; ASTM E96/E96M, Procedure B, Water Method.
3. Ultimate Elongation: Minimum 200 percent; ASTM D412, Die C.

4. Adhesion to Substrate: Minimum 16 lbf/sq. in. (110 kPa) when tested according to ASTM D4541.
5. Fire Propagation Characteristics: Passes NFPA 285 testing as part of an approved assembly.
6. UV Resistance: Can be exposed to sunlight for 30 days according to manufacturer's written instructions.

2.5 MEDIUM-BUILD AIR BARRIERS, VAPOR PERMEABLE

A. Medium-Build, Vapor-Permeable Air Barrier: Synthetic polymer material with an installed dry film thickness, according to manufacturer's written instructions, of 17 to 30 mils (0.4 to 0.8 mm) over smooth, void-free substrates.

1. Products: Subject to compliance with requirements, provide one of the following:

   a. Carlisle Coatings & Waterproofing Inc; Barrithane VP.
   b. DuPont de Nemours, Inc.; DuPont Tyvek Fluid Applied WB.
   c. GE Construction Sealants; Momentive Performance Materials Inc.; Elemax 2600.
   d. W. R. Meadows, Inc; Air-Shield LMP.

2. Physical and Performance Properties:

   a. Air Permeance: Maximum 0.004 cfm/sq. ft. of surface area at 1.57-lbf/sq. ft. (0.02 L/s x sq. m of surface area at 75-Pa) pressure difference; ASTM E2178.
   b. Vapor Permeance: Minimum 10 Perms; ASTM E96/E96M, Procedure B, Water Method.
   c. Ultimate Elongation: Minimum 250 percent; ASTM D412, Die C.
   d. Adhesion to Substrate: Minimum 16 lbf/sq. in. (110 kPa) when tested according to ASTM D4541.
   e. Fire Propagation Characteristics: Passes NFPA 285 testing as part of an approved assembly.
   f. UV Resistance: Can be exposed to sunlight for 180 days according to manufacturer's written instructions.

2.6 ACCESSORY MATERIALS

A. Provide primers, transition strips, termination strips, joint reinforcing fabric and strips, joint sealants, counterflashing strips, flashing sheets and metal termination bars, termination mastic, substrate patching materials, adhesives, tapes, foam sealants, lap sealants, and other accessory materials that are recommended in writing by air-barrier manufacturer to produce a complete air-barrier assembly and that are compatible with primary air-barrier material and adjacent construction to which they may seal.

B. Primer: Liquid waterborne primer recommended for substrate by air-barrier material manufacturer.

C. Stainless Steel Sheet: ASTM A240/A240M, Type 304, 0.0250 inch (0.64 mm) thick, and Series 300 stainless steel fasteners.

PART 3 - EXECUTION

3.1 EXAMINATION

A. Examine substrates, areas, and conditions, with Installer present, for compliance with requirements and other conditions affecting performance of the Work.

1. Verify that substrates are sound and free of oil, grease, dirt, excess mortar, or other contaminants.
2. Verify that substrates have cured and aged for minimum time recommended in writing by air-barrier manufacturer.
3. Verify that substrates are visibly dry and free of moisture. Test concrete substrates for capillary moisture by plastic sheet method according to ASTM D4263.
4. Verify that masonry joints are flush and completely filled with mortar.

B. Proceed with installation only after unsatisfactory conditions have been corrected.

3.2 SURFACE PREPARATION

A. Clean, prepare, treat, fill, and seal substrate and joints and cracks in substrate according to manufacturer's written instructions and details. Provide clean, dust-free, and dry substrate for air-barrier application.

B. Mask off adjoining surfaces not covered by air barrier to prevent spillage and overspray affecting other construction.

C. Remove grease, oil, bitumen, form-release agents, paints, curing compounds, and other penetrating contaminants or film-forming coatings from concrete.

D. Remove fins, ridges, mortar, and other projections and fill honeycomb, aggregate pockets, holes, and other voids in concrete with substrate-patching material.

E. Remove excess mortar from masonry ties, shelf angles, and other obstructions.

F. At changes in substrate plane, apply sealant or termination mastic beads at sharp corners and edges to form a smooth transition from one plane to another.

G. Cover gaps in substrate plane and form a smooth transition from one substrate plane to another with stainless steel sheet mechanically fastened to structural framing to provide continuous support for air barrier.

H. Bridge isolation joints, expansion joints, and discontinuous wall-to-wall, deck-to-wall, and deck-to-deck joints with air-barrier accessory material that accommodates joint movement according to manufacturer's written instructions and details.

3.3 ACCESSORIES INSTALLATION

A. Install accessory materials according to air-barrier manufacturer's written instructions and details to form a seal with adjacent construction and ensure continuity of air and water barrier.

1. Coordinate the installation of air barrier with installation of roofing membrane and base flashing to ensure continuity of air barrier with roofing membrane.
2. Install transition strip on roofing membrane or base flashing so that a minimum of 3 inches (75 mm) of coverage is achieved over each substrate.
3. Unless manufacturer recommends in writing against priming, apply primer to substrates at required rate and allow it to dry.
4. Apply primer to substrates at required rate and allow it to dry. Limit priming to areas that will be covered by air-barrier material on same day. Reprime areas exposed for more than 24 hours.

B. Connect and seal exterior wall air-barrier material continuously to roofing-membrane air barrier, concrete below-grade structures, floor-to-floor construction, exterior glazing and window systems, glazed curtain-wall systems, storefront systems, exterior louvers, exterior door framing, and other construction used in exterior wall openings, using accessory materials.

C. At end of each working day, seal top edge of strips and transition strips to substrate with termination mastic.

D. Apply joint sealants forming part of air-barrier assembly within manufacturer's recommended application temperature ranges. Consult manufacturer when sealant cannot be applied within these temperature ranges.

E. Wall Openings: Prime concealed, perimeter frame surfaces of windows, curtain walls, storefronts, and doors. Apply transition strip so that a minimum of 3 inches (75 mm) of coverage is achieved over each substrate. Maintain 3 inches (75 mm) of full contact over firm bearing to perimeter frames, with not less than 1 inch (25 mm) of full contact.

1. Transition Strip: Roll firmly to enhance adhesion.

F. Fill gaps in perimeter frame surfaces of windows, curtain walls, storefronts, and doors, and miscellaneous penetrations of air-barrier material with foam sealant.

G. Seal strips and transition strips around masonry reinforcing or ties and penetrations with termination mastic.

H. Seal top of through-wall flashings to air barrier with an additional 6-inch- (150-mm-) wide, transition strip.

I. Seal exposed edges of strips at seams, cuts, penetrations, and terminations not concealed by metal counterflashings or ending in reglets with termination mastic.

J. Repair punctures, voids, and deficient lapped seams in strips and transition strips. Slit and flatten fishmouths and blisters. Patch with transition strips extending 6 inches (150 mm) beyond repaired areas in strip direction.

3.4 PRIMARY AIR-BARRIER MATERIAL INSTALLATION

A. Apply air-barrier material to form a seal with strips and transition strips and to achieve a continuous air barrier according to air-barrier manufacturer's written instructions and details. Apply air-barrier material within manufacturer's recommended application temperature ranges.

1. Unless manufacturer recommends in writing against priming, apply primer to substrates at required rate and allow it to dry.
2. Limit priming to areas that will be covered by air-barrier material on same day. Reprime areas exposed for more than 24 hours.
3. Where multiple prime coats are needed to achieve required bond, allow adequate drying time between coats.

B. High-Build Air Barriers: Apply continuous unbroken air-barrier material to substrates according to the following thickness. Apply air-barrier material in full contact around protrusions such as masonry ties.

1. Vapor-Retarding, High-Build Air Barrier: Total dry film thickness as recommended in writing by manufacturer to comply with performance requirements, but not less than 35 mils (0.9 mm), applied in one or more equal coats.
2. Vapor-Permeable, High-Build Air Barrier: Total dry film thickness as recommended in writing by manufacturer to comply with performance requirements, but not less than 35 mils (0.9 mm), applied in one or more equal coats.

C. Medium-Build Air Barriers: Apply continuous unbroken air-barrier material to substrates according to the following thickness. Apply an increased thickness of air-barrier material in full contact around protrusions such as masonry ties.
1. Vapor-Permeable, Medium-Build Air Barrier: Total dry film thickness as recommended in writing by manufacturer to comply with performance requirements, applied in one or more equal coats. Apply additional material as needed to achieve void- and pinhole-free surface, but do not exceed thickness on which required vapor permeability is based.

D. Do not cover air barrier until it has been tested and inspected by testing agency.

E. Correct deficiencies in or remove air barrier that does not comply with requirements; repair substrates and reapply air-barrier components.

3.5 CLEANING AND PROTECTION

A. Protect air-barrier system from damage during application and remainder of construction period, according to manufacturer's written instructions.

1. Protect air barrier from exposure to UV light and harmful weather exposure as recommended in writing by manufacturer. If exposed to these conditions for longer than recommended, remove and replace air barrier or install additional, full-thickness, air-barrier application after repairing and preparing the overexposed materials according to air-barrier manufacturer's written instructions.
2. Protect air barrier from contact with incompatible materials and sealants not approved by air-barrier manufacturer.

B. Clean spills, stains, and soiling from construction that would be exposed in the completed work using cleaning agents and procedures recommended in writing by manufacturer of affected construction.

C. Remove masking materials after installation.

END OF SECTION 072726

SECTION 074113.17 - STANDING-SEAM METAL ROOF PANELS

PART 1 - GENERAL

1.1 RELATED DOCUMENTS

A. Drawings and general provisions of the Contract, including General and Supplementary Conditions and Division 01 Specification Sections, apply to this Section.

1.2 SUMMARY

A. Section Includes:

1. Standing-seam metal roof panels.
2. All trim and flashings including but not limited to; eaves, rakes, soffits.
3. Vapor retarder.
4. Underlayment.
5. Roof Insulation.
6. Cover Board/Plywood Sheathing.
7. Gutters, Downspouts, Trim.

B. Related Requirements:

1. Section 061600 "Sheathing" for plywood sheathing.

1.3 PREINSTALLATION MEETINGS

A. Preinstallation Conference: Conduct conference at Project site.

1. Meet with Owner, Architect, metal panel Installer, and installers whose work interfaces with or affects metal panels, including installers of roof accessories and roof-mounted equipment.
2. Review and finalize construction schedule and verify availability of materials, Installer's personnel, equipment, and facilities needed to make progress and avoid delays.
3. Review methods and procedures related to metal panel installation, including manufacturer's written instructions.
4. Examine support conditions for compliance with requirements, including alignment between and attachment to structural members.
5. Review structural loading limitations of deck during and after roofing.
6. Review flashings, special details, drainage, penetrations, equipment curbs, and condition of other construction that affect metal panels.
7. Review governing regulations and requirements for insurance, certificates, and tests and inspections if applicable.

8. Review temporary protection requirements for metal panel systems during and after installation.
9. Review procedures for repair of metal panels damaged after installation.
10. Document proceedings, including corrective measures and actions required, and furnish copy of record to each participant.

1.4 ACTION SUBMITTALS

A. Product Data: For each type of product.

1. Include construction details, material descriptions, dimensions of individual components and profiles, and finishes for each type of panel and accessory.

B. Shop Drawings:

1. Include fabrication and installation layouts of metal panels; details of edge conditions, joints, panel profiles, corners, anchorages, attachment system, trim, flashings, closures, and accessories; and special details.
2. Accessories: Include details of the flashing, trim, and anchorage systems, at a scale of not less than 1-1/2 inches per 12 inches (1:10).

C. Samples for Initial Selection: For each type of metal panel indicated with factory-applied color finishes.

1. Include similar Samples of trim and accessories involving color selection.

1.5 INFORMATIONAL SUBMITTALS

A. Qualification Data: For Installer.

B. Sample Warranties: For special warranties.

1.6 CLOSEOUT SUBMITTALS

A. Maintenance Data: For metal panels to include in maintenance manuals.

1.7 QUALITY ASSURANCE

A. Installer Qualifications: An entity that employs installers and supervisors who are trained and approved by manufacturer.

B. UL-Certified, Portable Roll-Forming Equipment: UL-certified, portable roll-forming equipment capable of producing metal panels warranted by manufacturer to be the same as factory-formed products. Maintain UL certification of portable roll-forming equipment for duration of work.

1.8 DELIVERY, STORAGE, AND HANDLING

A. Deliver components, metal panels, and other manufactured items so as not to be damaged or deformed. Package metal panels for protection during transportation and handling.

B. Unload, store, and erect metal panels in a manner to prevent bending, warping, twisting, and surface damage.

C. Stack metal panels horizontally on platforms or pallets, covered with suitable weathertight and ventilated covering. Store metal panels to ensure dryness, with positive slope for drainage of water. Do not store metal panels in contact with other materials that might cause staining, denting, or other surface damage.

D. Retain strippable protective covering on metal panels during installation.

1.9 FIELD CONDITIONS

A. Weather Limitations: Proceed with installation only when existing and forecasted weather conditions permit assembly of metal panels to be performed according to manufacturers' written instructions and warranty requirements.

1.10 COORDINATION

A. Coordinate sizes and locations of roof curbs, equipment supports, and roof penetrations with actual equipment provided.

B. Coordinate metal panel installation with rain drainage work, flashing, trim, construction of soffits, and other adjoining work to provide a leakproof, secure, and noncorrosive installation.

1.11 WARRANTY

A. Special Warranty: Manufacturer's standard form in which manufacturer agrees to repair or replace components of metal panel systems that fail in materials or workmanship within specified warranty period.

1. Failures include, but are not limited to, the following:

a. Structural failures including rupturing, cracking, or puncturing.
b. Deterioration of metals and other materials beyond normal weathering.

2. Warranty Period: Two years from date of Substantial Completion.

B. Special Warranty on Panel Finishes: Manufacturer's standard form in which manufacturer agrees to repair finish or replace metal panels that show evidence of deterioration of factory-applied finishes within specified warranty period.

1. Exposed Panel Finish: Deterioration includes, but is not limited to, the following:

a. Color fading more than 5 Delta E units when tested according to ASTM D2244.
b. Chalking in excess of a No. 8 rating when tested according to ASTM D4214.
c. Cracking, checking, peeling, or failure of paint to adhere to bare metal.

2. Finish Warranty Period: 20 years from date of Substantial Completion.

C. Special Weathertightness Warranty: Manufacturer's standard form in which manufacturer agrees to repair or replace standing-seam metal roof panel assemblies that fail to remain weathertight, including leaks, within specified warranty period.

1. Warranty Period: 20 years from date of Substantial Completion.

PART 2 - PRODUCTS

2.1 PERFORMANCE REQUIREMENTS

A. Structural Performance: Provide metal panel systems capable of withstanding the effects of the following loads, based on testing according to ASTM E1592:

1. Wind Loads: As indicated on Drawings.
2. Other Design Loads: As indicated on Drawings.
3. Deflection Limits: For wind loads, no greater than 1/180 of the span.

B. Air Infiltration: Air leakage of not more than 0.06 cfm/sq. ft. (0.3 L/s per sq. m) when tested according to ASTM E1680 or ASTM E283 at the following test-pressure difference:

1. Test-Pressure Difference: 6.24 lbf/sq. ft. (300 Pa).

C. Water Penetration under Static Pressure: No water penetration when tested according to ASTM E1646 or ASTM E331 at the following test-pressure difference:

1. Test-Pressure Difference: 6.24 lbf/sq. ft. (300 Pa).

D. Hydrostatic-Head Resistance: No water penetration when tested according to ASTM E2140.

E. Wind-Uplift Resistance: Provide metal roof panel assemblies that comply with UL 580 for wind-uplift-resistance class indicated.

1. Uplift Rating: UL 90.

F. FM Global Listing: Provide metal roof panels and component materials that comply with requirements in FM Global 4471 as part of a panel roofing system and that are listed in FM Global's "Approval Guide" for Class 1 or noncombustible construction, as applicable. Identify materials with FM Global markings.

1. Fire/Windstorm Classification: Class 1A- 90.
2. Hail Resistance: MH.

G. Thermal Movements: Allow for thermal movements from ambient and surface temperature changes by preventing buckling, opening of joints, overstressing of components, failure of joint sealants, failure of connections, and other detrimental effects. Base calculations on surface temperatures of materials due to both solar heat gain and nighttime-sky heat loss.

1. Temperature Change (Range): 120 deg F (67 deg C), ambient; 180 deg F (100 deg C), material surface

2.2 STANDING-SEAM METAL ROOF PANELS

A. Provide factory-formed metal roof panels designed to be installed by lapping and interconnecting raised side edges of adjacent panels with joint type indicated and mechanically attaching panels to supports using concealed clips in side laps. Include clips, cleats, pressure plates, and accessories required for weathertight installation.

1. Steel Panel Systems: Unless more stringent requirements are indicated, comply with ASTM E1514.

B. Vertical-Rib, Seamed-Joint, Standing-Seam Metal Roof Panels: Formed with vertical ribs at panel edges and a flat pan between ribs; designed for sequential installation by mechanically attaching panels to supports using concealed clips located under one side of panels, engaging opposite edge of adjacent panels, and mechanically seaming panels together.

a. Basis-of-Design Product: Subject to compliance with requirements, provide PAC-CLAD; Petersen; a Carlisle company; Tite-Lok Plus or a comparable product by one of the following:
b. MBCI; Superlok.
c. Berridge Manufacturing Company; Berridge Double Lock Zee-Lock

2. Metallic-Coated Steel Sheet: Zinc-coated (galvanized) steel sheet complying with ASTM A653/A653M, G90 (Z275) coating designation, or aluminum-zinc alloy-coated steel sheet complying with ASTM A792/A792M, Class AZ50 (Class AZM150) coating designation; structural quality. Prepainted by the coil-coating process to comply with ASTM A755/A755M.

a. Nominal Thickness: 22 gauge.
b. Exterior Finish: Two-coat fluoropolymer.
c. Color: As selected by Architect from manufacturer's full range.
d. Must be able to be installed on a 1:12 slope.

3. Clips: One-piece fixed to accommodate thermal movement.

a. Material: 0.028-inch- (0.71-mm-) nominal thickness, zinc-coated (galvanized) or aluminum-zinc alloy-coated steel sheet.

4. Joint Type: Double folded.
5. Panel Coverage: 12 inches (406 mm).
6. Panel Height: 1.5 inches (38 mm) or 2.0 inches (51 mm).

7. Texture: Smooth/Flat.

2.3 VAPOR RETARDER

A. Self-Adhering-Sheet Vapor Retarder: ASTM D1970/D1970M, polyethylene film laminated to layer of rubberized asphalt adhesive, minimum 40-mil- (1.0-mm-) total thickness; maximum permeance rating of 0.1 perm (6 ng/Pa x s x sq. m); cold applied, with slip-resisting surface and release paper backing.

1. Manufacturers: Subject to compliance with requirements and to meet the system warranty requirements, provide one of the following:
   a. Carlisle SynTec Incorporated;
   b. Firestone Building Products
   c. Johns Manville; a Berkshire Hathaway company
   d. Versico Roofing Systems; VapAir Seal.

2.4 UNDERLAYMENT MATERIALS

A. Self-Adhering, High-Temperature Underlayment: Provide self-adhering, cold-applied, sheet underlayment, a minimum of 30 mils (0.76 mm) thick, consisting of slip-resistant, polyethylene-film top surface laminated to a layer of butyl or SBS-modified asphalt adhesive, with release-paper backing. Provide primer when recommended by underlayment manufacturer.

1. Thermal Stability: Stable after testing at 240 deg F (116 deg C); ASTM D1970.
2. Low-Temperature Flexibility: Passes after testing at minus 20 deg F (29 deg C); ASTM D1970.

3. Manufacturers: Subject to compliance with requirements, provide products by one of the following:

   a. ATAS International, Inc.
   b. Carlisle WIP Products; a brand of Carlisle Construction Materials.
   c. GCP Applied Technologies Inc.
   d. GAF.
   e. Henry Company; a Carlisle company.

B. Slip Sheet: Manufacturer's recommended slip sheet, of type required for application.

2.5 MISCELLANEOUS MATERIALS

A. Miscellaneous Metal Subframing and Furring: ASTM C645; cold-formed, metallic-coated steel sheet, ASTM A653/A653M, G90 (Z275 hot-dip galvanized) coating designation or ASTM A792/A792M, Class AZ50 (Class AZM150) coating designation unless otherwise indicated. Provide manufacturer's standard sections as required for support and alignment of metal panel system.

B. Panel Accessories: Provide components required for a complete, weathertight panel system including trim, copings, fasciae, mullions, sills, corner units, clips, flashings, sealants, gaskets, fillers, closure strips, and similar items. Match material and finish of metal panels unless otherwise indicated.

1. Closures: Provide closures at eaves and ridges, fabricated of same metal as metal panels.
2. Backing Plates: Provide metal backing plates at panel end splices, fabricated from material recommended by manufacturer.
3. Closure Strips: Closed-cell, expanded, cellular, rubber or crosslinked, polyolefin-foam or closed-cell laminated polyethylene; minimum 1-inch- (25-mm-) thick, flexible closure strips; cut or premolded to match metal panel profile. Provide closure strips where indicated or necessary to ensure weathertight construction.

C. Flashing and Trim: Provide flashing and trim formed from same material as metal panels as required to seal against weather and to provide finished appearance. Locations include, but are not limited to, eaves, rakes, corners, bases, framed openings, ridges, fasciae, and fillers. Finish flashing and trim with same finish system as adjacent metal panels.

D. Gutters: Formed from same material as roof panels, complete with end pieces, outlet tubes, and other special pieces as required. Fabricate in minimum 96-inch- (2400-mm-) long sections, of size and metal thickness in accordance with manufacturer's recommendations. Furnish gutter supports spaced a maximum of 36 inches (914 mm) o.c., fabricated from same metal as gutters. Finish gutters to match metal roof panels.
1. Profile: SMACNA Style A., minimum 22 ga.
2. Expansion Joints: Butt style with cover plates.

E. Downspouts: Formed from same material as roof panels. Fabricate in 10 ft. (3 m) long sections, complete with formed elbows and offsets, of size and metal thickness in accordance with manufacturer's recommendations. Finish downspouts to match gutters.
1. Rectangular, size as indicated on drawings.
2. Minimum 22 gauge.

3. Fabricated Hanger Style: Fig. 1-35A in accordance with SMACNA's "Architectural Sheet Metal Manual."

F. Panel Fasteners: Self-tapping screws designed to withstand design loads.

G. Panel Sealants: Provide sealant type recommended by manufacturer that are compatible with panel materials, are nonstaining, and do not damage panel finish.

1. Sealant Tape: Pressure-sensitive, 100 percent solids, gray polyisobutylene compound sealant tape with release-paper backing. Provide permanently elastic, nonsag, nontoxic, nonstaining tape 1/2 inch (13 mm) wide and 1/8 inch (3 mm) thick.
2. Joint Sealant: ASTM C920; elastomeric polyurethane or silicone sealant; of type, grade, class, and use classifications required to seal joints in metal panels and remain weathertight; and as recommended in writing by metal panel manufacturer.
3. Butyl-Rubber-Based, Solvent-Release Sealant: ASTM C1311.

2.6 FABRICATION

A. Fabricate and finish metal panels and accessories at the factory, by manufacturer's standard procedures and processes, as necessary to fulfill indicated performance requirements demonstrated by laboratory testing. Comply with indicated profiles and with dimensional and structural requirements.

B. On-Site Fabrication: Subject to compliance with requirements of this Section, metal panels may be fabricated on-site using UL-certified, portable roll-forming equipment if panels are of same profile and warranted by manufacturer to be equal to factory-formed panels. Fabricate according to equipment manufacturer's written instructions and to comply with details shown.

C. Provide panel profile, including major ribs and intermediate stiffening ribs, if any, for full length of panel.

D. Fabricate metal panel joints with factory-installed captive gaskets or separator strips that provide a weathertight seal and prevent metal-to-metal contact, and that minimize noise from movements.

E. Sheet Metal Flashing and Trim: Fabricate flashing and trim to comply with manufacturer's recommendations and recommendations in SMACNA's "Architectural Sheet Metal Manual" that apply to design, dimensions, metal, and other characteristics of item indicated.

1. Form exposed sheet metal accessories that are without excessive oil canning, buckling, and tool marks and that are true to line and levels indicated, with exposed edges folded back to form hems.
2. Seams for Other Than Aluminum: Fabricate nonmoving seams in accessories with flat-lock seams. Tin edges to be seamed, form seams, and solder.
3. Sealed Joints: Form nonexpansion, but movable, joints in metal to accommodate sealant and to comply with SMACNA standards.
4. Conceal fasteners and expansion provisions where possible. Exposed fasteners are not allowed on faces of accessories exposed to view.
5. Fabricate cleats and attachment devices from same material as accessory being anchored or from compatible, noncorrosive metal recommended in writing by metal panel manufacturer.

    a. Size: As recommended by SMACNA's "Architectural Sheet Metal Manual" or metal panel manufacturer for application, but not less than thickness of metal being secured.

2.7 FINISHES

A. Protect mechanical and painted finishes on exposed surfaces from damage by applying a strippable, temporary protective covering before shipping.

B. Appearance of Finished Work: Variations in appearance of abutting or adjacent pieces are acceptable if they are within one-half of the range of approved Samples. Noticeable variations in same piece are unacceptable. Variations in appearance of other components are acceptable if

they are within the range of approved Samples and are assembled or installed to minimize contrast.

C. Steel Panels and Accessories:

1. Two-Coat Fluoropolymer: AAMA 621. Fluoropolymer finish containing not less than 70 percent polyvinylidene fluoride (PVDF) resin by weight in color coat. Prepare, pretreat, and apply coating to exposed metal surfaces to comply with coating and resin manufacturers' written instructions.
2. Concealed Finish: Apply pretreatment and manufacturer's standard white or light-colored acrylic or polyester backer finish consisting of prime coat and wash coat with a minimum total dry film thickness of 0.5 mil (0.013 mm).

PART 3 - EXECUTION

3.1 EXAMINATION

A. Examine substrates, areas, and conditions, with Installer present, for compliance with requirements for installation tolerances, metal panel supports, and other conditions affecting performance of the Work.

1. Examine primary and secondary roof framing to verify that rafters, purlins, angles, channels, and other structural panel support members and anchorages have been installed within alignment tolerances required by metal roof panel manufacturer.
2. Examine solid roof sheathing to verify that sheathing joints are supported by framing or blocking and that installation is within flatness tolerances required by metal roof panel manufacturer.

a. Verify that air- or water-resistive barriers have been installed over sheathing or backing substrate to prevent air infiltration or water penetration.

B. Examine roughing-in for components and systems penetrating metal panels to verify actual locations of penetrations relative to seam locations of metal panels before installation.

C. Proceed with installation only after unsatisfactory conditions have been corrected.

3.2 PREPARATION

A. Miscellaneous Supports: Install subframing, furring, and other miscellaneous panel support members and anchorages according to ASTM C754 and metal panel manufacturer's written recommendations.

3.3 INSTALLATION OF VAPOR RETARDER

A. Self-Adhering-Sheet Vapor Retarder: Prime substrate board if required by manufacturer. Prime concrete deck. Install self-adhering-sheet vapor retarder over area to receive vapor retarder, side and end lapping each sheet a minimum of 3-1/2 and 6 inches (90 and 150 mm), respectively.

1. Extend over edge of roof deck and terminate onto fluid applied air barrier.
2. Seal laps by rolling.

3.4 INSTALLATION OF UNDERLAYMENT

A. Self-Adhering Sheet Underlayment: Apply primer if required by manufacturer. Comply with temperature restrictions of underlayment manufacturer for installation. Apply at locations indicated below, wrinkle free, in shingle fashion to shed water, and with end laps of not less than 6 inches (152 mm) staggered 24 inches (610 mm) between courses. Overlap side edges not less than 3-1/2 inches (90 mm). Roll laps with roller. Cover underlayment within 14 days.

1. Apply over the entire roof surface.

B. Slip Sheet: Apply slip sheet over underlayment before installing metal roof panels if required by manufacturer.

3.5 INSTALLATION OF STANDING SEAM METAL ROOF PANELS

A. Install metal panels according to manufacturer's written instructions in orientation, sizes, and locations indicated. Install panels perpendicular to supports unless otherwise indicated. Anchor metal panels and other components of the Work securely in place, with provisions for thermal and structural movement.

1. Shim or otherwise plumb substrates receiving metal panels.
2. Flash and seal metal panels at perimeter of all openings. Fasten with self-tapping screws. Do not begin installation until air- or water-resistive barriers and flashings that will be concealed by metal panels are installed.
3. Install screw fasteners in predrilled holes.
4. Locate and space fastenings in uniform vertical and horizontal alignment.
5. Install flashing and trim as metal panel work proceeds.
6. Locate panel splices over, but not attached to, structural supports. Stagger panel splices and end laps to avoid a four-panel lap splice condition.
7. Align bottoms of metal panels and fasten with blind rivets, bolts, or self-tapping screws. Fasten flashings and trim around openings and similar elements with self-tapping screws.
8. Provide weathertight escutcheons for pipe- and conduit-penetrating panels.

B. Fasteners:

1. Steel Panels: Use stainless steel fasteners for surfaces exposed to the exterior; use galvanized-steel fasteners for surfaces exposed to the interior.

2. Fasteners SHALL NOT penetrate completely through the wood roof deck.

C. Anchor Clips: Anchor metal roof panels and other components of the Work securely in place, using manufacturer's approved fasteners according to manufacturers' written instructions.

D. Metal Protection: Where dissimilar metals contact each other or corrosive substrates, protect against galvanic action as recommended in writing by metal panel manufacturer.

E. Standing-Seam Metal Roof Panel Installation: Fasten metal roof panels to supports with concealed clips at each standing-seam joint at location, spacing, and with fasteners recommended in writing by manufacturer.

1. Install clips to supports with self-tapping fasteners.
2. Install pressure plates at locations indicated in manufacturer's written installation instructions.
3. Seamed Joint: Crimp standing seams with manufacturer-approved, motorized seamer tool so clip, metal roof panel, and factory-applied sealant are completely engaged.
4. Watertight Installation:

a. Apply a continuous ribbon of sealant or tape to seal joints of metal panels, using sealant or tape as recommend in writing by manufacturer as needed to make panels watertight.
b. Provide sealant or tape between panels and protruding equipment, vents, and accessories.
c. At panel splices, nest panels with minimum 6-inch (152-mm) end lap, sealed with sealant and fastened together by interlocking clamping plates.

F. Accessory Installation: Install accessories with positive anchorage to building and weathertight mounting, and provide for thermal expansion. Coordinate installation with flashings and other components.

1. Install components required for a complete metal panel system including trim, copings, corners, seam covers, flashings, sealants, gaskets, fillers, closure strips, and similar items. Provide types indicated by metal roof panel manufacturers; or, if not indicated, types recommended by metal roof panel manufacturer.

G. Flashing and Trim: Comply with performance requirements, manufacturer's written installation instructions, and SMACNA's "Architectural Sheet Metal Manual." Provide concealed fasteners where possible, and set units true to line and level as indicated. Install work with laps, joints, and seams that will be permanently watertight and weather resistant.

1. Install exposed flashing and trim that is without buckling and tool marks, and that is true to line and levels indicated, with exposed edges folded back to form hems. Install sheet metal flashing and trim to fit substrates and achieve waterproof and weather-resistant performance.
2. Expansion Provisions: Provide for thermal expansion of exposed flashing and trim. Space movement joints at a maximum of 10 feet (3 m) with no joints allowed within 24 inches (610 mm) of corner or intersection. Where lapped expansion provisions cannot be used or would not be sufficiently weather resistant and waterproof, form expansion joints of

intermeshing hooked flanges, not less than 1 inch (25 mm) deep, filled with mastic sealant (concealed within joints).

H. Pipe Flashing: Form flashing around pipe penetration and metal roof panels. Fasten and seal to metal roof panels as recommended by manufacturer.

3.6 INSTALLATION OF ROOF-DRAINAGE SYSTEM

A. Install sheet metal roof-drainage items to produce complete roof-drainage system in accordance with cited sheet metal standard unless otherwise indicated. Coordinate installation of roof perimeter flashing with installation of roof-drainage system.

B. Hanging Gutters:

1. Join sections with joints sealed with sealant.
2. Provide for thermal expansion.
3. Attach gutters at eave or fascia to firmly anchor them in position.
4. Provide end closures and seal watertight with sealant.
5. Slope to downspouts.
6. Fasten gutter spacers to front and back of gutter.
7. Anchor gutter with gutter brackets or straps spaced not more than 30 inches (760 mm) apart to roof deck unless otherwise indicated, and loosely lock to front gutter bead.
8. Install gutter with expansion joints at locations indicated on Drawings, but not exceeding, 50 feet (15.2 m) apart. Install expansion-joint caps.

C. Downspouts:

1. Join sections with 1-1/2-inch (38-mm) telescoping joints.
2. Provide hangers with fasteners designed to hold downspouts securely to walls.
3. Locate hangers at top and bottom and at approximately 60 inches (1500 mm) o.c.
4. Provide elbows at base of downspout to direct water away from building.
5. Connect downspouts to underground drainage system.

3.7 ERECTION TOLERANCES

A. Installation Tolerances: Shim and align metal panel units within installed tolerance of 1/4 inch in 20 feet (6 mm in 6 m) on slope and location lines as indicated and within 1/8-inch (3-mm) offset of adjoining faces and of alignment of matching profiles.

3.8 FIELD QUALITY CONTROL

A. Manufacturer's Field Service: Engage a factory-authorized service representative to test and inspect metal roof panel installation, including accessories. Report results in writing.

B. Remove and replace applications of metal roof panels where tests and inspections indicate that they do not comply with specified requirements.

C. Additional tests and inspections, at Contractor's expense, are performed to determine compliance of replaced or additional work with specified requirements.

D. Prepare test and inspection reports.

3.9 CLEANING AND PROTECTION

A. Remove temporary protective coverings and strippable films, if any, as metal panels are installed, unless otherwise indicated in manufacturer's written installation instructions. On completion of metal panel installation, clean finished surfaces as recommended by metal panel manufacturer. Maintain in a clean condition during construction.

B. Replace metal panels that have been damaged or have deteriorated beyond successful repair by finish touchup or similar minor repair procedures.

END OF SECTION 074113.17

SECTION 074116 - INSULATED METAL ROOF PANELS

PART 1 - GENERAL

1.1 SECTION INCLUDES

A. Foamed-insulation-core standing seam metal roof panels, with related metal trim and accessories.

1.2 RELATED REQUIREMENTS

A. Division 05 Section "Structural Steel Framing" for steel framing supporting metal panels.

B. Division 07 Section "Metal Wall and Roof Panels" for factory-formed metal wall, roof, and soffit panels.

C. Division 07 Section "Sheet Metal Flashing and Trim" for sheet metal copings, flashings, reglets and roof drainage items in addition to items specified in this Section.

D. Division 07 Section "Manufactured Roof Specialties" for manufactured copings, reglets, and roof drainage items in addition to items specified in this Section.

E. Division 07 Section "Roof Accessories" for roof hatches, smoke vents, equipment curbs, and equipment supports.

F. Division 07 Section "Joint Sealants" for field-applied.

G. Division 13 Section "Metal Building Systems" for steel framing supporting metal panels.

1.3 REFERENCES

A. American Society of Civil Engineers (ASCE): www.asce.org/codes-standards:

1. ASCE 7 - Minimum Design Loads for Buildings and Other Structures.

B. ASTM International (ASTM): www.astm.org:

1. ASTM A 653 - Specification for Steel Sheet, Zinc-Coated (Galvanized) or Zinc-Iron Alloy-Coated (Galvannealed) by the Hot-Dip Process.
2. ASTM A 755 - Specification for Steel Sheet, Metallic Coated by the Hot-Dip Process and Prepainted by the Coil-Coating Process for Exterior Exposed Building Products.
3. ASTM A 792 - Standard Specification for Steel Sheet, 55% Aluminum-Zinc Alloy-Coated by the Hot-Dip Process.
4. ASTM A 924 – General Requirements for Steel Sheet, Metallic-Coated by the Hot-Dip Process.
5. ASTM C 1363 - Standard Test Method for Thermal Performance of Building Materials and Envelope Assemblies by Means of a Hot Box Apparatus
6. ASTM D 1621 – Compressive Properties of Rigid Cellular Plastics.
7. ASTM D 1622 – Apparent Density of Rigid Cellular Plastics.
8. ASTM D 1623 – Standard Test Method for Tensile and Tensile Adhesive Properties of Rigid Cellular Plastics.
9. ASTM D 6226 - Standard Test Method for Open Cell Content of Rigid Cellular Plastics
10. ASTM C 518 - Standard Test Method for Steady-State Heat Flux Measurements and Thermal Transmission Properties by Means of the Heat Flow Meter Apparatus.

11. ASTM D 2244 - Test Method for Calculation of Color Differences from Instrumentally Measured Color Coordinates.
12. ASTM D 4214 - Test Methods for Evaluating Degree of Chalking of Exterior Paint Films.
13. ASTM E 72 - Standard Test Methods of Conducting Strength Tests of Panels for Building Construction.
14. ASTM E 84 - Test Methods for Surface Burning Characteristics of Building Materials.
15. ASTM E 108 – Standard Test Methods for Fire Tests of Roof Coverings
16. ASTM E 1592 - Standard Test Method for Structural Performance of Sheet Metal Roof and Siding Systems by Uniform Static Air Pressure Difference.
17. ASTM E 1646 - Standard Test Method for Water Penetration of Exterior Metal Roof Panel Systems by Uniform Static Air Pressure Difference.
18. ASTM E 1680 - Standard Test Method for Rate of Air Leakage through Exterior Metal Roof Panel Systems.
19. ASTM E 1980 - Practice for Calculating Solar Reflectance Index of Horizontal and Low-Sloped Opaque Surfaces.
20. ASTM E 2140 – Standard Test Method for Water Penetration of Metal Roof Panel Systems by Static Water Pressure Head.

C. Cool Roof Rating Council (CRRC): www.coolroofs.org/productratingprogram.html:

1. CRRC-1-2016 – CRRC Product Rating Program.

D. National Fire Protection Association (NFPA):
1. NFPA 259 – Test Method for Potential Heat of Building Materials.
2. NFPA 286 – Fire Test of Evaluating Conditions of Wall and Ceiling Finish to Roof Fire Growth.

E. FM Global (FM): www.fmglobal.com:

1. ANSI/FM 4471 - Approval Standard for Class 1 Panel Roofs.

2. ANSI/FM 4880 - American National Standard for Evaluating Insulated Wall and Roof/Ceiling Assemblies.

F. Green Seal (GS) www.greenseal.org
1. GS-11 – Green Seal Standard for Paints and Coatings, Edition 3.2, October 26, 2015.
US Green Building Council (USGBC): www.usgbc.org:

1.4 QUALITY ASSURANCE

A. Manufacturer/Source: Provide metal panel assemblies and accessories from a single manufacturer approved under an accredited third-party quality control program

B. Manufacturer Qualifications: Approved manufacturer listed in this Section with minimum ten years' experience in the manufacturing of similar products and successful use in similar applications.

1. Approval of Comparable Products: Submit the following in accordance with project substitution requirements, within time allowed for substitution review:

a. Product data, including certified independent test data indicating compliance with requirements.

b. Samples of each component.
c. Sample submittal from similar project.
d. Project references: Minimum of five installations not less than five years old, with Owner and Architect contact information.
e. Sample warranty.
f. Certificate from an accredited third-party Quality Control Program.

1.5 Substitutions following award of contract are not allowed except as stipulated in Division 01 General Requirements

1.6 Approved manufacturers must meet separate requirements of Submittals Article.

A. Installer Qualifications: Experienced Installer with minimum of five years' experience with successfully completed projects of a similar nature and scope.

1. Installer's Field Supervisor: Experienced mechanic or field technician from the installer, that is approved by manufacturer, supervising work on site whenever work is underway.

1.7 ADMINISTRATIVE REQUIREMENTS

A. Preinstallation Meeting: Prior to erection of framing, conduct preinstallation meeting at site attended by Owner, Architect, metal panel installer, metal panel manufacturer's technical representative, inspection agency, and related trade contractors.

1. Coordinate building framing in relation to metal panel system.
2. Coordinate openings and penetrations of metal panel system.
3. Coordinate work of Division 07 Sections "Roof Specialties" and "Roof Accessories" and openings and penetrations and manufacturer's accessories with installation of metal panels.

1.8 ACTION SUBMITTALS

A. Product Data: Manufacturer's data sheets for specified products.

B. Shop Drawings: Show layouts of metal panels. Include details of each condition of installation, panel profiles, and attachment to building. Provide details at a minimum scale 1-1/2-inch per foot of edge conditions, joints, fastener and sealant placement, flashings, openings, penetrations, curbs, vents, snow guards, lightning arresting equipment, and special details. Make distinctions between factory and field assembled work.

1. Include data indicating compliance with performance requirements.
2. Indicate points of supporting structure that must coordinate with metal panel system installation.
3. Include structural data indicating compliance with performance requirements and requirements of local authorities having jurisdiction.

C. Samples for Initial Selection: For each exposed product specified including sealants. Provide representative color charts of manufacturer's full range of colors.

D. Samples for Verification:

1. Provide 12-inch- (305 mm-) long section of each metal panel profile.
2. Provide color chip verifying color selection.

1.9 INFORMATIONAL SUBMITTALS

A. Product Test Results: Indicating compliance of products with requirements.

B. Warranty:

1. Submit manufacturer's written two (2) year limited warranty providing panels to be free from defects in materials and workmanship, beginning from the date of substantial completion excluding coil coatings (paint finishes) that are covered under a separate warranty.
2. The installation contractor shall issue a separate warranty against defects in installed materials and workmanship, beginning from the date of substantial completion of the installation.

1.10 CLOSEOUT SUBMITTALS

A. Maintenance data.

B. Manufacturer's Warranty: Executed copy of manufacturer's warranty.

1.11 DELIVERY, STORAGE, AND HANDLING

A. Protect products of metal panel system during shipping, handling, and storage to prevent staining, denting, deterioration of components, or other damage. Protect panels and trim bundles during shipping. Protect painted surfaces with a protective covering before shipping.

1. Deliver, unload, store, and erect metal panels and accessory items without misshaping panels or exposing panels to surface damage from weather or construction operations.
2. Store in accordance with Manufacturer's written instructions. Provide wood collars for stacking and handling in the field.
3. Shield foam insulated metal panels from direct sunlight until installation.

1.12 WARRANTY

A. Special Manufacturer's Warranty: Submit Manufacturer's two (2) year limited warranty providing panels to be free from defects in materials and workmanship, beginning from the date of substantial completion excluding coil coatings (paint finishes) that are covered under a separate warranty.

B. The installation contractor shall issue a separate warranty against defects in installed materials and workmanship, beginning from the date of substantial completion of the installation.

C. Special Panel Finish Warranty: Submit Manufacturer's limited warranty on the exterior paint finish for adhesion to the metal substrate and limited warranty on the exterior paint finish for chalk and fade.

1. Fluoropolymer Two-Coat System:
   a. Color fading in excess of [5] or [10] for copper, silver metallic and bright red; Hunter units per ASTM D 2244.
   b. Chalking in excess of [6] for copper, silver metallic and bright red or [8] rating per ASTM D 4214.
   c. Failure of adhesion, peeling, checking, or cracking.

2. Other finish options available; additional information can be found at metlspan.com or contact Metl-Span at 844.574.5367 or by contacting Metl-Span, a Nucor company; Lewisville, Texas Tel: 214-897-6822; Email: Eamon.Lyons@nucor.com.

PART 2 - PRODUCTS

2.1 MANUFACTURER

A. Basis of Design: **Metl-Span, CFR**. Provide basis of design product or comparable products of other manufacturer approved by Architect in accordance with Instructions to Bidders and Division 01 General Requirements.
   1. Metl-Span, a Nucor company; Lewisville, Texas Tel: 214-897-6822; Email: Eamon.Lyons@nucor.com; Web: metlspan.com.

2.2 PERFORMANCE REQUIREMENTS

A. General: Provide metal panel system meeting performance requirements as determined by application of specified tests by a qualified testing facility on manufacturer's standard assemblies.

B. Roof Panel Radiative Property Performance:
   1. **Energy Star Qualified**: Listed on USDOE ENERGY STAR Roof Products Qualified Product List.
   2. **Cool Roof Rating Council**: Listed in CRRC Rated Product Directory, with minimum properties as required by applicable Energy efficiency or High-Performance Green Building standard.
   3. Wind Loads: Determine loads based on applicable building code, wind speed, importance factor, exposure category, and pressure coefficients indicated on drawings.
   4. Deflection Limits: Withstand inward and outward wind-load design pressures in accordance with applicable building code with maximum deflection of [1/240]
   5. Uplift Resistance of Roof Assemblies: Provide a panel that has been tested to and passed UL580 uplift requirements.
   6. Uplift Tests for Roof Covering Systems: Provide a panel that has been tested to and passed UL1897 uplift requirements.
   7. Roof Panel Snow Loads: [25 lbf/sq. ft. (1197 Pa)].
   8. Deflection Limits: Withstand inward and outward wind-load design pressures in accordance with applicable building code with maximum deflection of 1/240 of the span with no evidence of failure.

C. **Roof Panels FM Approvals Listing**: Provide a product with an assembly passing FM Approvals 4471 as part of a panel roofing system, and that are listed in FM Approvals' "RoofNav" for Class 1 construction.
   1. Fire/Windstorm Classification: [Class 1A-90]
   2. Hail Resistance Rating: SH.

D. Fire Performance Characteristics: Provide metal panel systems with the following fire-test characteristics determined by indicated test standard as applied by UL or other testing and inspection agency acceptable to authorities having jurisdiction.

1. Surface-Burning Characteristics: Provide metal panel systems with the following characteristics when tested per ASTM E 84. The core shall have:

   a. Flame spread index: 25 or less.
   b. Smoke developed index: 450 or less.

2. Fire Performance of Insulated Roof: Class 1 roof and wall panel per ANSI/FM 4880.

3. Fire Growth: The fire assembly shall meet the requirements of the standard for NFPA 286.

E. Roof Panel Air Infiltration, ASTM E 1680: Maximum 0.017 cfm/sq. ft. (0.08 L/s per sq. m) at static-air-pressure difference of 15 lbf/sq. ft. (718 Pa).

F. Roof Panel Water Penetration Static Pressure, ASTM E 1646: No uncontrolled water penetration at a static pressure of 15 lbf/sq. ft. (718Pa).

G. Hydrostatic Roof System Tests: No leakage after subjecting a multi-panel assembly configured in a two-span condition to a six-inch static water head after a seven-day period (referenced as FM 4471, Appendix G) or six-hour period per ASTM E 2140.

H. Test procedure for susceptibility to leakage of discontinuous roof systems per FM 4471 Appendix G: water applied to a depth of 6” above the lowest section of roof profile. No water infiltration observed during the seven-day test period.

I. Static water penetration per ASTM E2140: no water leakage after 6 hours at a water depth of 6”.

J. Thermal Movements: Allow for thermal movements from variations in both ambient and internal temperatures. Accommodate movement of support structure caused by thermal expansion and contraction. Allow for deflection and design for thermal stresses caused by temperature differences from one side of the panel to the other.

K. Thermal Performance: When tested in accordance with ASTM C 518, C1363, and computer model, (Measurement of Steady State thermal Transmission / Thermal Performance of Building Materials and Envelope Assemblies), the panels shall provide a k factor of 0.112 btu-in/hr-sf-deg F at a 35° F (1.67° C) mean temperature and a maximum U-Factor of .043 at a 35° F mean temperature.

2.3 INSULATED METAL ROOF PANELS

A. Standing Seam, Foamed-Insulation-Core Metal Roof Panels: Structural metal panels consisting of an exterior standing seam with an interior tongue and groove joint, coupled with a vapor seal in the standing seam, and provides superior resistance to air and moisture intrusion. Attached with concealed fasteners to the structure.

1. Basis of Design: Metl-Span**, CFR Insulated Metal Panel**.
   a. A Nucor company; Lewisville, Texas Tel: 214-897-6822; Email: Eamon.Lyons@nucor.com; Web: metlspan.com.
   b.
2. Exterior Face Sheet: 22 gauge coated thickness, with stucco embossed] surface.

1) Finish: Fluoropolymer two-coat system.
2) Color: As indicated on drawings, IMP-2 Artic White.

3. Interior Face Sheet: 24 gauge coated thickness, with stucco embossed surface Mesa profile.
   1) Finish: Polyester two-coat system.
   2) Color: Manufacturer standard, Igloo White.

4. Endlaps: Provide panels with factory endlaps, notching, swedging and backer plates; where panel lengths permit.

5. Low Eave Treatment: Provide cutback for trim/gutter installation; where panel lengths permit.

6. Panel Width: 36 inches (914 mm).
9. Panel Thickness: 3 inch (76 mm), or as shown on drawings.

10. Insulating Core: Polyisocyanurate with zero ozone depletion potential blowing agent
    a. Closed Cell Content: 90% or more as determined by ASTM D 6226
    b. Compressive Strength: As required to meet structural performance requirements and with a minimum of 20 psi as determined by ASTM D 1621
    c. Shear Strength: As required to meet structural performance requirements and with a minimum of 20 psi as determined by ASTM C 273
    d. Tensile Strength: As required to meet structural performance requirements and with a minimum of 16 psi ASTM D 1623
    e. Minimum Density: 2.2 pcf (32 kg/m3) as determined by ASTM D 1622
    f. **Thermal Resistance (R-Value)**: 26.9 per ASTM C 518 at 35 degrees Fahrenheit mean temperature.

11. Heat Transfer Coefficient (U-factor)**: Maximum 0.043** as determined by ASTM C 1363 or computer model at 35 degrees Fahrenheit mean temperature. Tested specimen must include at least two engaged side joints.

2.4 METAL ROOF PANEL ACCESSORIES

A. General: Provide complete metal panel assemblies incorporating trim, copings, fasciae, gutters and downspouts, and miscellaneous flashings. Provide required fasteners, closure strips, and sealants as indicated in manufacturer's written instructions.

B. Flashing and Trim: Match material, thickness, and finish of metal panel face sheet.

C. Panel Fasteners: Self-tapping screws and other acceptable fasteners recommended by metal panel manufacturer. Provide corrosion-resistant fasteners with heads matching color of metal panels by means of factory-applied coating, with weathertight resilient washers.

D. Joint Sealers: Provide Tape Mastic Sealants and Concealed Joint Sealants per Section 079200, “Joint Sealants”.

E. **Roof Accessories**: Approved by metal panel manufacturer. Refer to Section 077200 "Roof Accessories" for requirements for curbs, equipment supports, roof hatches, heat and smoke vents, ventilators, and preformed flashing sleeves.

F. **Snow Guards**: Compatible with standing seam roof and approved by metal panel manufacturer. Refer to Section 077253 "Snow Guards" for requirements for snow guards attached to metal roof panels.

G. **Roof Curbs**: Compatible with standing seam roof and approved by metal panel manufacture. Refer to Section 077210 “Roof Curbs” for requirements for roof curbs attached to metal roof panels.

2.5 FABRICATION

A. General: Provide factory fabricated and finished metal panels, trim, and accessories meeting performance requirements, indicated profiles, and structural requirements.

B. Fabricate metal panel joints configured to accept sealant tape providing weathertight seal and preventing metal-to-metal contact and minimizing noise resulting from thermal movement.

C. Sheet Metal Flashing and Trim: Fabricate flashing and trim to comply with manufacturer's written instructions, approved shop drawings, and project drawings.

2.6 FINISHES

A. Finishes, General: Prepare, pretreat, and apply coating to exposed metal surfaces to comply with coating and resin manufacturers' written instructions.

B. Exterior Face Sheet Coil-Coated Finish System

1. Fluoropolymer Two-Coat System: 0.2 – 0.3 mil primer with 0.7 - 0.8 mil 70 percent PVDF fluoropolymer color coat, meeting solar reflectance index requirements.
   a. Basis of Design: Metl-Span, Fluoropolymer.

C. Interior Face Sheet Coil-Coated Finish System:
1. Polyester Two-Coat System: 0.20 – 0.25 mil primer with 0.7 – 0.8 mil color coat
   a. Basis of Design: Metl-Span, Igloo White

PART 3 - EXECUTION

3.1 EXAMINATION

A. Examine metal panel system substrate with Installer present. Inspect for erection tolerances and other conditions that would adversely affect installation of metal panels.

1. Inspect framing that will support insulated metal panels to determine if support components are installed as indicated on approved shop drawings and are within tolerances acceptable to metal panel manufacturer and installer. Confirm presence of acceptable framing members at recommended spacing to match installation requirements of metal panels.

2. Panel Support Tolerances: Confirm that metal panel supports are within tolerances acceptable to metal panel manufacturer but not greater than the following:

   a. 1/4 inch (6 mm) in 20 foot (6100 mm) in any direction.
   b. 3/8 inch (9 mm) over any single roof plane.

c. At Purlin Spacing 7 feet (2133 mm) or less: 1/8 inches (3 mm), out only.

B. Correct out-of-tolerance work and other deficient conditions prior to proceeding with insulated metal panel installation.

3.2 METAL PANEL INSTALLATION

A. Standing Seamed, Concealed-Fastener Insulated Metal Panels: Install metal panel system in accordance with manufacturer's written instructions, approved shop drawings, and project drawings. Install metal panels in orientation, sizes, and locations indicated. Anchor panels and other components securely in place. Provide for thermal and structural movement.

B. Attach panels to metal framing using clips, fasteners, and sealants recommended for application by metal panel manufacturer.

1. Fasten metal panels to supports with fasteners at each location indicated on approved shop drawings, at spacing and with fasteners recommended by manufacturer.
2. Cut panels in field where required using manufacturer's recommended methods.
3. Provide weatherproof jacks for pipe and conduit penetrating metal panels.
4. Dissimilar Materials: Where elements of metal panel system will come into contact with dissimilar materials, treat faces and edges in contact with dissimilar materials as recommended by metal panel manufacturer.

C. Attach panel flashing trim pieces to supports using recommended fasteners and joint sealers.

D. Joint Sealers: Install tape sealers and liquid sealants where indicated and where required for weatherproof performance of metal panel assemblies.

1. Seal panel side and perimeter joints using joint sealers indicated in manufacturer's instructions.
2. Seal roof panel joints utilizing tape sealer and vapor seal bead of non-curing butyl.
3. Prepare joints and apply sealants per requirements of Division 07 Section "Joint Sealants."

3.3 ACCESSORY INSTALLATION

A. General: Install metal panel accessories with positive anchorage to building and weathertight mounting; provide for thermal expansion. Coordinate installation with flashings and other components.

1. Install components required for a complete metal panel assembly, including trim, copings, flashings, sealants, closure strips, and similar items.
2. Comply with details of assemblies utilized to establish compliance with performance requirements and manufacturer's written installation instructions.
3. Set units true to line and level as indicated. Install work with laps, joints, and seams that will be permanently weather resistant.

3.4 FIELD QUALITY CONTROL

A. Testing Agency: Engage an independent testing and inspecting agency acceptable to Architect to perform field tests and inspections and to prepare test reports.

3.5 CLEANING AND PROTECTION

A. Remove temporary protective films immediately in accordance with metal panel manufacturer's instructions. Clean finished surfaces as recommended by metal panel manufacturer.

B. Replace damaged panels and accessories that cannot be repaired to the satisfaction of the Architect.

END OF SECTION

SECTION 074213.13 - PREFORMED METAL WALL PANELS

PART 1 - GENERAL

1.1 DESCRIPTION OF WORK

A. This section covers the pre-finished, pre-fabricated Architectural metal wall panel system. All metal trim, accessories, fasteners, insulation and sealants indicated on the drawings as part of this section.
B. Drawings and general provisions of the Contract, including general and Supplementary Conditions and Division 01 Specifications, apply to this section.

1.2 SUMMARY

A. Section Includes
   1. Factory formed metal wall panels
B. Related work specified elsewhere (Note: select from the below or add appropriate sections)
   1. Metal Roof Deck: Division 5 - Metal Deck Sections
   2. Flashing and Trim: Division 7- Flashing and Sheet Metal
   3. Coping and Gravel Stops: Division 7 Roof Specialties and Accessories
   4. Sealants: Division 7 Joint Sealers Sections

1.3 Definitions

A. Metal Wall Panel Assembly: Metal wall panels, attachment system components, miscellaneous metal framing, thermal, and accessories necessary for a complete weathertight system.

1.4 QUALITY ASSURANCE

A. Petersen Aluminum Corp, Acworth, GA, 800-272-4482Petersen Aluminum Corp, Phoenix, AZ, 833-750-1935 products establish a minimum of quality required.
B. Manufacturer and erector shall demonstrate experience of a minimum of five (5) years in this type of project.
C. Sheet Metal Industry Standard: Comply with Sheet Metal and Air Conditioning Contractors National Association (SMACNA) *Architectural Sheet Metal Manual.*
D. Panels shall be factory-produced only. No portable, installer-owned or installer-rented machines will be permitted.

1.5 SUBSTITUTIONS

A. The material, products and equipment specified in this section establish a standard for required function, dimension, appearance and quality to be met by any proposed substitution.

1.6 SYSTEM DESCRIPTION

A. Material to comply with:

1. ASTM A792/A792M Standard Specification for Sheet Steel, 55% Aluminum-Zinc Alloy Coated by the Hot-Dip process

1.7 WALL PANEL SYSTEM PERFORMANCE TESTING

A. General Performance: Metal wall panels shall comply with performance requirements without failure due to defective manufacture, fabrication, installation or other defects in construction.
B. Panels to meet:
   1. Metal Wall or Metal Soffit System shall be designed to meet applicable Local Building Code and the Soffit System shall have been tested by the Manufacturer per ASTM E-330 and have the applicable Load Tables published from this Air Bag testing for negative loads.

1.8 WARRANTIES

A. Finish warranty: Manufacturer's standard form in which manufacturer agrees to repair finish or replace metal wall panels that show evidence of deterioration of factory-applied finish within specified warranty period.
   1. Exposed Panels Finish - deterioration includes the following:
      a. Color fading more than 5 hunter units when tested according to ASTM D 2244
      b. Chalking in excess of a No. 8 rating when tested according to ASTM D 4214
      c. Cracking, checking, peeling or failure of a paint to adhere to a bare metal.
   2. Warranty Period: 20 Years from the date of substantial completion
B. Applicator shall furnish written warranty for a two (2) year period from date of substantial completion of building covering repairs required to maintain roof and flashings in watertight condition

1.9 SUBMITTALS

A. Furnish detailed drawings showing profile and gauge of exterior sheets, location and type of fasteners, location, gauges, shape and method of attachment of all trim locations and types of sealants, and any other details as may be required for a weather-tight installation.
B. Provide finish samples of all colors specified.
C. Shop drawings: Show fabrication and installation layouts of metal wall panels or metal soffit panels, details of edge conditions, panel profiles, corners, anchorages, trim, flashings, closures and accessories, and special details. Distinguish between factory and field-assembled work
D. Coordination Drawings: Plans, drawn to scale, on which the following are shown and coordinated with each other, based on input from installer of the items involved.
E. LEED Submittals
   1. Product data for Credit MR 4.1 and credit MR 4.2: Indicating the percentages by weight of postconsumer and preconsumer recycled content for products having recycled content.

1.10 DELIVERY, STORAGE AND HANDLING

A. Ordering: Comply with manufacturer's ordering instruction and lead time requirements to avoid construction delays.

B. Deliver components, sheets, metal wall panels and other manufactured items so as not to be damaged or deformed. Package metal wall panels for protection during transportation and handling.
C. Unload, store and erect metal wall panels in a manner to prevent bending, warping, twisting and surface damage.
D. Stack metal wall panels on platforms or pallets, covered with suitable weathertight and ventilated covering. Store metal wall panels to ensure dryness. Do not store metal wall panels in contact with other materials that might cause staining, denting or other surface damage.
E. Protect strippable protective coating on any metal coated product from exposure to sunlight and high humidity, except to the extent necessary for material installation.

1.11 PROJECT CONDITIONS

A. Weather Limitations: proceed with installation only when existing and forecasted weather conditions permit metal wall panel work to be performed.
B. Field Measurements: Verify actual dimensions of construction contiguous with metal roof panels by field measurements before fabrication.

PART 2 - PRODUCTS

2.1 PANEL DESIGN

A. General: Provide factory-formed metal wall panels designed for wall, soffit and fascia applications where a flush or flat appearance is desired. A round interlock leg and concealed fastening system act to improve the flush appearance while providing additional strength.
B. Wall panels shall be Reveal Wall 12" widths with 1" height.
C. Panels to be produced Smooth - Factory Standard. Specifier note: Factory standard is smooth unless specified. Specifier Note: Depending on producing factory, panels may be specified with venting strips or perforated, aluminum panels only, for soffit applications. Check with local factory for capabilities.
D. Forming: Use continuous end rolling method. No end laps on panels. No portable rollforming machines will be permitted on this project, no installer-owned or installer-rented machines will be permitted. It is the intent of the Architect to provide Factory-Manufactured panel systems only for this project.

2.2 ACCEPTABLE MANUFACTURERS

A. This project is detailed around the metal wall product of Petersen Aluminum Corp, Acworth, GA, 800-272-4482Petersen Aluminum Corp, Phoenix, AZ, 833-750-1935 Flush Wall

2.3 MATERIALS AND FINISHES

A. Preformed metal panels shall be fabricated of 22 GA and shall be Herr-Voss corrective leveled for flat appearance.

B. Color shall be Musket Gray
C. Finish shall be Kynar 500 or Hylar 5000 Fluorocarbon coating with a top side film thickness of 0.70 to 0.90 mil over a 0.25 to 0.3 mil prime coat to provide a total dry film thickness of 0.95 to 1.25 mil, to meet AAMA 621. Bottom side shall be coated with a primer with a dry film thickness of 0.25 mil. Finish shall conform to all tests for adhesions, flexibility and longevity as specified by Kynar 500 or Hylar 5000 finish supplier.
D. If Strippable coating to be applied on the pre-finished panels to the top side to protect the finish during fabrication, shipping and handling, film shall be removed before installation.
E. Trim: Trim shall be fabricated of the same material and finish to match the profile, and will be press broken in lengths of 10 to 12 feet. Trim shall be formed only by the manufacturer of their approved dealer. Trim to be erected in overlapped condition. Use lap strips only as indicated on drawings. Miter conditions shall be factory welded material to match the sheeting.
F. Accessories/Fasteners: Fasteners shall be of type, material, size, corrosion resistance, holding power and other properties required to fasten miscellaneous framing members to substrates. Accessories and their fasteners shall be capable of resisting the specified design wind uplift forces and shall allow for thermal movement of the wall panel system. Exposed fasteners shall not restrict free movement of the roof panel system resulting from thermal forces, except at designed points of roof panel fixity
G. Substrate shall be Plywood
H. Underlayment
    1. 1. On all surfaces to be covered with metal wall panels, furnish and install a 40 mil "Peel & Stick membrane", required as outlined by metal panel manufacturer. Membrane to be a minimum of 40 mil thickness, smooth, non-granular, by one of the following manufacturers:
        a. W.R Grace "Ice & Water Shield"
        b. Cetco Strongseal
        c. Carlisle CCW WIP 300HT
        d. Interwrap Titanium PSU
        e. MFM Corp "Wind & Water Shield"
        f. Polyguard Deck Guard HT of Polyglas HT
        g. Tamko TW Tile and Metal Underlayment
I. Sealants
    1. Provide two-part polysulfide class B non-sag type for vertical and horizontal joints or
    2. One part polysulfide not containing pitch or phenolic extenders or
    3. Exterior grade silicone sealant recommended by roofing manufacturer or
    4. One part non-sag, gun grade exterior type polyurethane recommended by the roofing manufacturer.

2.4 FABRICATION

A. Comply with dimensions, profile limitations, gauges and fabrication details shown and if not shown, provide manufacturerâ€™s standard product fabrication.
    1. Max panel length is 55'.
B. Fabricate components of the system in factory, ready for field assembly.
C. Fabricate components and assemble units to comply with fire performance requirements specified.

D. Apply specified finishes in conformance with manufacturerâ€™s standard, and according to manufacturerâ€™s instructions.

PART 3 - EXECUTION

3.1 INSPECTION

A. Examine alignment of structural steel and related supports, primary and secondary roof framing, solid roof sheathing, prior to installation.
B. For the record, prepare written report, endorsed by installer, listing conditions detrimental to performance of the Work.
C. Proceed with installation only after unsatisfactory conditions have been corrected.

3.2 FASTENERS

A. Secure units to supports.
B. Place fasteners as indicated in manufacturer's standards.

3.3 INSTALLATION

A. Compliance: Comply with manufacturerâ€™s product data, recommendations and installation instructions for substrate verification, preparation requirements and installation.
B. Panels shall be installed plumb and true in a proper alignment and in relation to the structural framing. The erector must have at least five years successful experience with similar applications.
C. Install metal panels, fasteners, trim and related sealants in accordance with approved shop drawings and as may be required for a weather-tight installation.
D. Provide uniform, neat seams.
E. Fasteners: Conceal fasteners where possible in exposed work. Cover and seal fasteners and anchors for watertight and leakproof installation.
F. Remove all strippable coating and provide a dry-wipe down cleaning of the panels as they are erected.

3.4 DAMAGED MATERIAL

A. Upon determination of responsibility, repair or replace damaged metal panels and trim to the satisfaction of the Architect and Owner.

3.5 CLEANING

A. Cleaning: Remove temporary coverings and protection of adjacent work areas. Repair or replace damage installed products. Clean installed products in accordance with manufacturer's instruction prior to owner's acceptance. Remove construction debris from project site and legally dispose of debris.

END OF SECTION

SECTION 074213.19 – INSULATED METAL WALL PANELS

PART 1 - GENERAL

1.1 SECTION INCLUDES

A. Foamed in place-insulation-core concealed fastener metal wall panels, with related metal trim and accessories.

1.2 RELATED REQUIREMENTS

A. Division 05 Section "Structural Steel Framing" for steel framing supporting metal panels.

B. Division 07 Section "Sheet Metal Flashing and Trim" for sheet metal flashing items in addition to items specified in this Section.

C. Division 07 Section "Metal Wall and Roof Panels" for factory-formed metal wall, roof, and soffit panels.

D. Division 13 Section "Metal Building Systems" for steel framing supporting metal panels.

1.3 REFERENCES

A. American Architectural Manufacturer's Association (AAMA): www.aamanet.org:

1. AAMA 501.2 - Quality Assurance and Diagnostic Water Leakage Field Check of Installed Storefronts, Curtain Walls, and Sloped Glazing Systems.

B. American Society of Civil Engineers (ASCE): www.asce.org/codes-standards:

1. ASCE 7 - Minimum Design Loads for Buildings and Other Structures.

C. ASTM International (ASTM): www.astm.org:

1. ASTM A 653 - Specification for Steel Sheet, Zinc-Coated (Galvanized) or Zinc-Iron Alloy-Coated (Galvannealed) by the Hot-Dip Process.
2. ASTM A 755 - Specification for Steel Sheet, Metallic Coated by the Hot-Dip Process and Prepainted by the Coil-Coating Process for Exterior Exposed Building Products.
3. ASTM A 792 - Standard Specification for Steel Sheet, 55% Aluminum-Zinc Alloy-Coated by the Hot-Dip Process.
4. ASTM A 666 – Standard Specification for Annealed or Cold-Worked Austenitic Stainless Steel Sheet, Strip, Plate, and Flat Bar
5. ASTM C 518 - Standard Test Method for Steady State Heat Flux Measurements and Thermal Transmission Properties by Means of the Heat Flow Meter Apparatus.
6. ASTM C 1363 - Standard Test Method for Thermal Performance of Building Materials and Envelope Assemblies by Means of a Hot Box Apparatus
7. ASTM C 273 – Properties of Sandwich Core Materials
8. ASTM D 1621 - Compressive Properties of Rigid Cellular Plastics.
9. ASTM D 1622 - Apparent Density of Rigid Cellular Plastics.
10. ASTM D 1623 – Standard Test Method for Tensile and Tensile Adhesion Properties of Rigid Cellular Plastics
11. ASTM D 2126 – Standard Test Method for Response of Rigid Cellular Plastics to Thermal and Humid Aging
12. ASTM D 2244 - Test Method for Calculation of Color Differences from Instrumentally Measured Color Coordinates.
13. ASTM D 4214 - Test Methods for Evaluating Degree of Chalking of Exterior Paint Films.

14. ASTM D 6226 - Standard Test Method for Open Cell Content of Rigid Cellular Plastics
15. ASTM E 72 - Standard Test Methods of Conducting Strength Tests of Panels for Building Construction.
16. ASTM E 84 - Test Methods for Surface Burning Characteristics of Building Materials.
17. ASTM E 283 - Standard Test Method for Determining Rate of Air Leakage Through Exterior Windows, Curtain Walls, and Doors Under Specified Pressure Differences Across the Specimen.
18. ASTM E 331 - Standard Test Method for Water Penetration of Exterior Windows, Skylights, Doors, and Curtain Walls by Uniform Static Air Pressure Difference.
19. ASTM E 2357 – Standard Test Method for Determining Air Leakage Rate of Air Barrier Assemblies

D. National Fire Protection Association (NFPA)

1. NFPA 259 – Test Method for Potential Heat of Building Materials.
2. NFPA 285 – Evaluation of Fire Propagation Characteristics of Exterior Non-Load Bearing Wall Assemblies.
3. NFPA 286 – Fire Test of Evaluating Conditions of Wall and Ceiling Finish to Roof Fire Growth.

E. FM Global (FM): www.fmglobal.com:

1. A product that carries the following FM testing:

a. FM 4880 Examination Standard for Class 1 Fire Rating of Building Panels or Interior Finish Materials
b. FM 4881 Approval Standard for Class 1 Exterior Wall Systems.

F. Canadian Standards Association (CSA)

1. CAN/ULC S102 – Standard Method of Test for Surface Burning Characteristics of Building Materials and Assemblies.
2. CAN/ULC S101 – Fire Endurance Tests of Building Construction and Materials.
3. CAN/ULC S134 – Fire Test of Exterior Wall Assemblies.
4. CAN/ULC S138 – Fire Growth of Insulated Building Panels in a Full-Scale Room Configuration.

G. Green Seal (GS) www.greenseal.org

1. GS-11 – Green Seal Standard for Paints and Coatings, Edition 3.2, October 26, 2015.

1.4 QUALITY ASSURANCE

A. Manufacturer/Source: Provide metal panel assemblies and accessories from a single manufacturer approved under an accredited third-party quality control program

B. Manufacturer Qualifications: Approved manufacturer listed in this Section with minimum ten years' experience in the manufacturing of similar products and successful use in similar applications.

1. Approval of Comparable Products: Submit the following in accordance with project substitution requirements, within time allowed for substitution review:

a. Product data, including certified independent test data indicating compliance with requirements from an IAS accredited agency like Intertek, and carry an approval report equal to a CCRR.
b. Samples of each component.
c. Sample submittal from similar project.
d. Project references: Minimum of five installations not less than five years old, with Owner and Architect contact information.
e. Sample warranty.
f. Certificate from an accredited third-party Quality Control Program.

2. Substitutions following award of contract are not allowed except as stipulated in Division 01 General Requirements
3. Approved manufacturers must meet separate requirements of Submittals Article.

C. Installer Qualifications: Experienced Installer [certified by metal panel manufacturer] with minimum of five years' experience with successfully completed projects of a similar nature and scope.

1. Installer's Field Supervisor: Experienced mechanic [certified by metal panel manufacturer] supervising work on site whenever work is underway.

D. Buy American Compliance: Materials provided under work of this Section shall comply with the following requirements:

1. Buy American Act of 1933 BAA-41 U.S.C §§ 10a – 10d.
2. Buy American provisions of Section 1605 of the American Recovery and Reinvestment Act of 2009 (ARRA)

1.5 ADMINISTRATIVE REQUIREMENTS

A. Preinstallation Meeting: Prior to erection of framing, conduct preinstallation meeting at site attended by Owner, Architect, metal panel installer, metal panel manufacturer's technical representative, inspection agency and related trade contractors.

1. Coordinate building framing in relation to metal panel system.
2. Coordinate openings and penetrations of metal panel system.
3. Coordinate work of Division 07 Sections "Roof Specialties" and "Roof Accessories" and openings and penetrations and manufacturer's accessories with installation of metal panels.

1.6 ACTION SUBMITTALS

A. Product Data: Manufacturer's data sheets for specified products.

1. IEQ Credit 4.1: Low-Emitting Materials - Adhesives and Sealants. Provide documentation of the following:

a. Product data for adhesives and sealants demonstrating compliance with standards of California Department of Public Heath v1.1-2010 and South Coast Air Quality Management District Rule #1168.

2. IEQ Credit 4.2: Low-Emitting Materials – Paints and Coatings. Provide documentation of the following:

a. Product data for paint and coatings demonstrating compliance with the VOC limits as established in Green Seal Standard GS-11

B. Shop Drawings: Show layouts of metal panels. Include details of each condition of installation, panel profiles, and attachment to building. Provide details at a minimum scale 1-1/2-inch per foot of edge conditions, joints, fastener and sealant placement, flashings, openings, penetrations, and special details. Make distinctions between factory and field assembled work.

1. Include data indicating compliance with performance requirements.
2. Indicate points of supporting structure that must coordinate with metal panel system installation.
3. Include structural data indicating compliance with performance requirements and requirements of local authorities having jurisdiction.

C. Samples for Initial Selection: For each exposed product specified including sealants. Provide representative color charts of manufacturer's full range of colors.

D. Samples for Verification:

1. Provide 12-inch- (305 mm) long section of each metal panel profile.
2. Provide color chip verifying color selection.

1.7 INFORMATIONAL SUBMITTALS

A. Product Test Results: Indicating compliance of products with requirements.

B. Qualification Information: For Installer

C. Buy American Certification: Manufacturers' letters of compliance acceptable to authorities having jurisdiction, indicating products comply with requirements.

D. Warranty:

1. Submit manufacturer’s written two (2) year limited warranty providing panels to be free from defects in materials and workmanship, beginning from the date of substantial completion excluding coil coatings (paint finishes) that are covered under a separate warranty.
2. The installation contractor shall issue a separate warranty against defects in installed materials and workmanship, beginning from the date of substantial completion of the installation.

1.8 CLOSEOUT SUBMITTALS

A. Maintenance data.

B. Manufacturer's Warranty: Executed copy of manufacturer's warranty.

1.9 DELIVERY, STORAGE, AND HANDLING

A. Protect products of metal panel system during shipping, handling, and storage to prevent staining, denting, deterioration of components or other damage. Protect panels and trim bundles during shipping. Protect painted surfaces with a protective covering before shipping.

1. Deliver, unload, store, and erect metal panels and accessory items without deforming panels or exposing panels to surface damage from weather or construction operations.

2. Store in accordance with Manufacturer's written instructions.
3. Shield foam insulated metal panels from direct sunlight until all components are installed.

1.10 WARRANTY

A. Special Manufacturer's Warranty: Submit Manufacturer's two (2) year limited warranty providing panels to be free from defects in materials and workmanship, beginning from the date of substantial completion excluding coil coatings (paint finishes) that are covered under a separate warranty.

B. The installation contractor shall issue a separate warranty against defects in installed materials and workmanship, beginning from the date of substantial completion of the installation.

C. Special Panel Finish Warranty: Submit Manufacturer's limited warranty on the exterior paint finish for adhesion to the metal substrate and limited warranty on the exterior paint finish for chalk and fade.

1. Fluoropolymer Two-Coat System:

a. Color fading in excess of [5] or [10] for copper, silver metallic and bright red; Hunter units per ASTM D 2244.
b. Chalking in excess of [6] for copper, silver metallic and bright red or [8] rating per ASTM D 4214.
c. Failure of adhesion, peeling, checking, or cracking.

1. Other finish options available; additional information can be found at metlspan.com or contact Metl-Span at 844.574.5367 or by contacting Metl-Span, a Nucor company; Lewisville, Texas Tel: 214-897-6822; Email: Eamon.Lyons@nucor.com.

PART 2 - PRODUCTS

2.1 MANUFACTURER

A. Basis of Design: **Metl-Span, CF Mesa**. Provide basis of design product or comparable products of other manufacturer approved by Architect in accordance with Instructions to Bidders and Division 01 General Requirements.

1. Metl-Span, a Nucor company; Lewisville, Texas Tel: 214-897-6822; Email: Eamon.Lyons@nucor.com; Web: metlspan.com.

B. Provide basis of design product, or comparable product approved by Architect prior to bid.

2.2 PERFORMANCE REQUIREMENTS

A. General: Provide metal panel system meeting performance requirements as determined by application of specified tests by a qualified testing facility on manufacturer's standard assemblies.

B. Structural Performance: Provide metal panel assemblies capable of withstanding the effects of indicated loads and stresses within limits and under conditions indicated, as determined by ASTM E 72 or E1592 applied in accordance with ICC AC 04, Section 4, Panel Load Test Option or Section 5, Panel Analysis Option:

1. Wind Loads: Determine loads based on applicable building code, wind speed, importance factor, exposure category, and pressure coefficients indicated on drawings.
2. Deflection Limits: Withstand inward and outward wind-load design pressures in accordance with applicable building code with maximum deflection of [1/180]

C. FM Approvals Listing: Comply with FM Approval 4881. Provide metal wall panel that is listed in the FM Approvals' "Approval Guide."

D. Fire Performance Characteristics: Provide metal panel systems with the following fire-test characteristics determined by indicated test standard as applied by testing and inspection agency acceptable to authorities having jurisdiction.

1. Surface-Burning Characteristics: The insulating core shall have been tested per ASTM E 84. The core shall have:

   a. Flame spread index: 25 or less.
   b. Smoke developed index: 450 or less.

2. Room Test Performance: FM Global 4880: The panel assembly shall meet the performance requirements cited by FM 4880, classifying the exterior building panel as Class 1 and ensuring large-scale integrity when exposed to flame.
3. Fire Tests of Building Construction Materials: The panel system shall have been tested in accordance with E119 and achieve a passing and rated assembly.
4. Evaluation of Fire Propagation characteristics of Exterior Non-Load Bearing Wall Assemblies: The panel system shall have been tested and be able to provide a passing assembly in accordance with NFPA 285.
5. Fire Growth: The fire assembly shall meet the requirements of the standard for NFPA 286
   5. Potential Heat: Determined in accordance with NFPA 259
6. IBC Chapter 26: Panel Performance under the above test methods, shall meet the requirements of IBC, Chapter on foam plastics.

E. Air Infiltration, ASTM E 283: < 0.01 cfm/ft2 air infiltration rate at static pressure differential of 6.24 psf (300 Pa).

F. Water Penetration Static Pressure:

1. ASTM E 331: No uncontrolled water penetration at a static pressure of 15 lbf/sq. ft. (718Pa) for 15 minutes.
2. ASTM E 331 Modified (2-hour duration): No uncontrolled water penetration at a static pressure of 6.24 lbf/sq. ft. (300 Pa).

G. Florida State Building Code Compliance: Provide insulated metal wall panels complying with requirements for installation under Florida State Building Code outside of high velocity wind zone. Where applicable, high velocity hurricane zone requirements shall be provided.

H. Thermal Movements: Allow for thermal movements from variations in both ambient and internal temperatures. Accommodate movement of support structure caused by thermal expansion and contraction. Allow for deflection and design for thermal stresses caused by temperature differences from one side of the panel to the other.

I. Thermal Performance: When tested in accordance with ASTM C 518, C1363, and computer model, (Measurement of Steady State thermal Transmission / Thermal Performance of Building Materials and Envelope Assemblies), the panels shall provide a k factor of 0.112

btu-in/hr-sf-deg F at a 35° F (1.67° C) mean temperature and a maximum U-Factor of .045 at a 35° F mean temperature.

2.3 INSULATED METAL WALL PANELS

A. Concealed Fastener, Insulated Metal Wall Panels with foam core: Structural metal panels consisting of exterior metal sheet and interior metal sheet with matching 4 by 1/8 inch (102 by 3 mm) o.c. profile. Factory foamed-in-place polyisocyanurate core, with tongue-and-groove panel edges, attached to supports using concealed fasteners.

1. Basis of Design: Metl-Span, CF Mesa

   a. A Nucor company; Lewisville, Texas Tel: 214-897-6822; Email: Eamon.Lyons@nucor.com; Web: metlspan.com.

2. G-90 galvanized coated steel conforming to ASTM A 653 or AZ-50 aluminum-zinc alloy coated steel, conforming to ASTM A 792/A 792M, minimum grade 33, pre-painted by the coil-coating process per ASTM A 755/A 755M.
3. Exterior Face Sheet: 22 gauge thickness, with smooth unembossed surface.

   1. Finish: Fluoropolymer two-coat system.
   2. Color: As indicated on drawings, IMP-1 Regal Gray.

4. Interior Face Sheet: 24 gauge thickness, with smooth unembossed surface Mesa or Light Mesa profile.

   1. Finish: Polyester two-coat system.
   2. Color: Manufacturer standard, Igloo White.

5. Panel Width: 36 inches (914 mm)
6. Panel Thickness: 2.5 inch (64 mm).
7. Insulating Core: Polyisocyanurate with zero ozone depletion potential blowing agent

   a. Closed Cell Content: 90% or more as determined by ASTM D 6226
   b. Compressive Strength: As required to meet structural performance requirements and with a minimum of 20 psi as determined by ASTM D 1621
   c. Shear Strength: As required to meet structural performance requirements and with a minimum of 15 psi as determined by ASTM C 273
   d. Tensile Strength: As required to meet structural performance requirements and with a minimum of 16 psi as determined by ASTM D 1623
   e. Minimum Density: 2.2 pcf (32 kg/m3) as determined by ASTM D 1622

      (1) A minimum shear strength of 20 lb./sq. in with a shear modulus of minimum 550 lb./sq. in..

   f. Panel Sealant/Vapor Seal: Factory-applied non-curing butyl.

   g. Thermal Resistance R-Value: 21.9 deg. F * hr * sq. ft./Btu (K * sq. m/W) per ASTM C 518 at 35 degrees Fahrenheit mean temperature.

8. Thermal Transmittance (U-factor): Maximum 0.045 Btu/hr * sq. ft. * deg. F (W/K * sq. m) as determined by ASTM C 1363 at 35 degrees Fahrenheit mean temperature. Tested specimen must include at least two engaged side joints.

2.4 METAL WALL PANEL ACCESSORIES

A. General: Provide complete metal panel assemblies incorporating trim, copings, fasciae, gutters and downspouts, and miscellaneous flashings. Provide required fasteners, closure strips, and sealants as indicated in manufacturer's written instructions.

B. Flashing and Trim: Match material, thickness, and finish of metal panels.

C. Panel Clips: ASTM A 653/A 653M, G90 (Z180) hot-dip galvanized zinc coating, one-piece, configured for concealment in panel joints, and identical to clips utilized in tests demonstrating compliance with performance requirements.

D. Panel Fasteners: Self-drilling or Self-tapping screws and other acceptable fasteners recommended by metal panel manufacturer. Where exposed fasteners cannot be avoided, supply corrosion-resistant fasteners with heads matching color of metal panels by means of factory-applied coating, with weathertight resilient washers.

E. Joint Sealers:

1. Sealants: Provide Tape Mastic Sealants, Non-skinning sealants, and Urethane Sealants in accordance with manufacturers' standards

2.5 FABRICATION

A. General: Provide factory fabricated and finished metal panels, trim, and accessories meeting performance requirements, indicated profiles, and structural requirements.

B. Fabricate metal panel joints configured to accept sealant providing weathertight seal.

C. Sheet Metal Flashing and Trim: Fabricate flashing and trim to comply with manufacturer's written instructions, approved shop drawings, and project drawings.

2.6 FINISHES

A. Finishes, General: Prepare, pretreat, and apply coating to exposed metal surfaces to comply with coating and resin manufacturer's written instructions.

B. Exterior Face Sheet Coil-Coated Finish System

1. Fluoropolymer Two-Coat System: 0.2 – 0.3 mil primer with 0.7 - 0.8 mil 70 percent PVDF fluoropolymer color coat, [meeting solar reflectance index requirements].

a. Basis of Design: Metl-Span, Fluoropolymer.

C. Interior Face Sheet Coil-Coated Finish System

1. Polyester Two-Coat System: 0.20 – 0.25 mil primer with 0.7 – 0.8 mil color coat

a. Basis of Design: Metl-Span, Igloo White

PART 3 - EXECUTION

3.1 EXAMINATION

A. Examine metal panel system substrate with Installer present. Inspect for erection tolerances and other conditions that would adversely affect installation of metal panels.

1. Inspect framing that will support insulated metal panels to determine if support components are installed as indicated on approved shop drawings and are within tolerances acceptable to metal panel manufacturer and installer. Confirm presence of acceptable framing members at recommended spacing to match installation requirements of metal panels.
2. Panel Support Tolerances: Confirm that metal panel supports are within tolerances acceptable to metal panel manufacturer but not greater than the following:
    a. 1/4 inch (6 mm) in 20 foot (6100 mm) in any direction.
    b. 3/8 inch (9 mm) over any single wall plane.
    c. Girt Spacing 8 feet (2438 mm) or more: 1/4 inch (6 mm) out only.
    d. Girt Spacing Less Than 8 feet (2438 mm): 1/8 inch (3 mm) out only.
    e. CF Architectural girt spacing less than 4 feet (1219 mm): 1/16 inch (1.5 mm) inch out only.

B. Correct out-of-tolerance work and other deficient conditions prior to proceeding with insulated metal panel installation.

3.2 METAL PANEL INSTALLATION

A. Concealed-Fastener Insulated Metal Panels with foam core: Install metal panel system in accordance with manufacturer's written instructions, approved shop drawings, and project drawings. Install metal panels in orientation, sizes, and locations indicated. Anchor panels and other components securely in place. Provide for thermal and structural movement.

B. Attach panels to metal framing using screws, fasteners, sealants, and adhesives recommended for application by metal panel manufacturer.

1. Fasten metal panels to supports with the number and type of fastener(s) at each location as indicated on approved shop drawings, and at a support spacing and material recommended by the manufacturer.
2. Cut panels in field where required using manufacturer's recommended methods.
3. Provide weatherproof jacks for pipe and conduit penetrating metal panels.
4. Dissimilar Materials: Where elements of metal panel system will come into contact with dissimilar materials, treat faces and edges in contact with dissimilar materials as recommended by metal panel manufacturer.

C. Attach panel flashing trim pieces to supports using recommended fasteners and joint sealants.

D. Joint Sealers: Install sealants where indicated and where required for weatherproof performance of metal panel assemblies.

1. Seal panel base assembly, openings, panel head joints, and perimeter joints using sealants indicated in manufacturer's instructions.
2. Seal wall panel joints; apply continuously without gaps in accordance with manufacturer's written instructions, approved shop drawings, and project drawings.
3. Prepare joints and apply sealants per requirements of Division 07 Section.

3.3 ACCESSORY INSTALLATION

A. General: Install metal panel accessories with positive anchorage to building and weather tight mounting; provide for thermal expansion. Coordinate installation with flashings and other components.

1. Install components required for a complete metal panel assembly, including trim, copings, flashings, sealants, closure strips, and similar items.
2. Comply with details of assemblies utilized to establish compliance with performance requirements and manufacturer's written installation instructions.
3. Set units true to line and level as indicated. Install work with laps, joints, and seams that will be permanently weather resistant.

3.4 FIELD QUALITY CONTROL

A. Testing Agency: Engage an independent testing and inspecting agency acceptable to Architect to perform field tests and inspections and to prepare test reports.

B. Water-Spray Test: After completing a portion of a metal panel elevation including accessories and trim, test 2-bay area selected by Architect for water penetration, according to AAMA 501.2.

3.5 CLEANING AND PROTECTION

A. Remove temporary protective films immediately in accordance with metal panel manufacturer's instructions. Clean finished surfaces as recommended by metal panel manufacturer.

B. Replace damaged panels and accessories that cannot be repaired to the satisfaction of the Architect.

END OF SECTION 074213

SECTION 074113.19A - INSULATED-COMPOSITE BACKUP PANEL SYSTEM

PART 1 - GENERAL

1.1 SECTION INCLUDES

A. Metal wall backup panel system consisting of foamed in place-insulation-core metal wall panels and accessories.

1.2 RELATED REQUIREMENTS

A. Division 05 Section "Cold-Formed Metal Framing" for support framing for metal wall backup panels.

B. Division 07 Section "Sheet Metal Flashing and Trim" for metal flashing components at openings and perimeter.

C. Division 13 Section "Metal Building Systems" for support framing for metal wall backup panels.

1.3 REFERENCES

A. Reference Standard Editions: Comply with requirements of specified standards edition cited in applicable building code, or if not cited in code, with requirements of edition current at time of issuing of specifications

B. American Architectural Manufacturer's Association (AAMA): www.aamanet.org:

1. AAMA 809.2 - Voluntary Specification Non-Drying Sealants

C. American Society of Civil Engineers (ASCE): www.asce.org/codes-standards:

1. ASCE 7 - Minimum Design Loads for Buildings and Other Structures

D. ASTM International (ASTM): www.astm.org:

1. ASTM A 653/A 653M - Standard Specification for Steel Sheet, Zinc-Coated (Galvanized) or Zinc-Iron Alloy-Coated (Galvannealed) by the Hot-Dip Process
2. ASTM A 755 – Standard Specification for Steel Sheet, Metallic Coated by the Hot-Dip Process and Prepainted by the Coil-Coating Process for Exterior Exposed Building Products
3. ASTM A 792/A 792M - Standard Specification for Steel Sheet, 55% Aluminum-Zinc Alloy-Coated by the Hot-Dip Process
4. ASTM C 920 - Standard Specification for Elastomeric Joint Sealants
5. ASTM C 1363 - Test Method for Thermal Performance of Building Materials and Envelope Assemblies by Means of a Hot Box Apparatus
6. ASTM D 1929 - Test Method for Determining Ignition Temperature of Plastics
7. ASTM E 72 - Test Methods of Conducting Strength Tests of Panels for Building Construction

8. ASTM E 84 - Test Methods for Surface Burning Characteristics of Building Materials
9. ASTM E 2357 - Test Method for Determining the Rate of Air Leakage Through Exterior Windows, Curtain Walls, and Doors under Specified Pressure Differences across the Specimen
10. ASTM E 331 - Test Method for Water Penetration of Exterior Windows, Curtain Walls, and Doors by Uniform Static Air Pressure Difference

E. National Fire Protection Association (NFPA): www.nfpa.org:

1. NFPA 285 - Standard Fire Test Method for Evaluation of Fire Propagation Characteristics of Exterior Non-Load-Bearing Wall Assemblies Containing Combustible Components

F. Underwriters Laboratories, Inc. (UL): www.ul.com:

1. UL 263 - Fire Tests of Building Construction and Materials

1.4 PERFORMANCE REQUIREMENTS

A. General: Provide metal wall backup panel system meeting the following performance requirements as determined by a qualified testing agency's application of specified tests on manufacturer's standard assemblies.

B. Structural Performance: Provide metal wall backup panel system fabricated to withstand effects of indicated loads and stresses within limits and under conditions indicated, when tested per ASTM E 72.

1. Wind Load Test: Determine loads based on uniform pressure indicated on the drawings.
2. Seismic Performance Test: Comply with ASCE 7, "Minimum Design Loads for Buildings and Other Structures": Sections 11 - 23, "Seismic".

C. Air Infiltration Test: Maximum 0.004 cfm/sq. ft. (0.05 L/s per sq. m) per ASTM E 283 at a static-air-pressure difference of 1.57 lb./sq. ft. (75 Pa).

D. Water Penetration Test: No uncontrolled water penetration at a static pressure of 15 lb./sq. ft. (0.7 kPa) per ASTM E 331 and 6.24 psf for 2 hours per International Building Code – Chapter 14.

E. Thermal Performance Test: Thermal Resistance (R-value) indicated, per ASTM C 1363, corrected to 15 mph (24.1 k/h) outside and still air inside, as-installed condition including fastening and joints.

F. Fire-Test-Response Characteristics: Provide metal wall backup panel system with the following fire-test-response characteristics determined by the indicated test standard as applied by UL or other testing and inspection agency acceptable to authorities having jurisdiction.

1. Surface Burning Characteristics: Not greater than the following, per ASTM E 84 or UL 723, for foam core and interior surface:

a. Flame spread index: 25 or less.
b. Smoke developed index: 450 or less.

2. **Intermediate Scale Multistory Fire Test**: Representative mockup tested per NFPA 285.

1.5 QUALITY ASSURANCE

A. Manufacturer Qualifications: Manufacturer listed in this Section or approved for Project with a minimum 5 years of experience in manufacture of similar products in successful use in similar applications.

1. Approval of Comparable Products: Submit the following in accordance with project substitution requirements, within time period allowed for substitution review:

a. Product data, including certified independent test data indicating compliance with requirements.
b. Samples of each component.
c. Sample submittal from similar project.
d. Project references: Minimum of 5 installations not less than 5 years old, with owner contact information.
e. Sample warranty.

2. Substitutions following award of contract are not allowed except as stipulated in Division 01 General Requirements.
3. Approved manufacturers must meet separate requirements of Submittals Article.

B. Installer Qualifications: Experienced Installer with minimum of 5 successful completed projects of similar materials and scope and employing workers trained by manufacturer to install products of this section. Installer must provide proof of training at the time of submittal. See section 1.11 for further verification and warranty requirements.

C. **Buy American Act Certification**: Comply with provisions of the Buy American Act 41 U.S.C 10a – 10d.

1.6 ADMINISTRATIVE REQUIREMENTS

A. Coordination: Coordinate the installation of metal wall backup panel system structural support and exterior wall cladding panels.

B. Pre-installation Meeting: Conduct pre-installation meeting at site attended by Owner, Architect, manufacturer's technical representative, and other trade contractors.

1. Coordinate building framing in relation to metal wall backup panels.
2. Coordinate window, door, and other openings and penetrations of metal wall backup panels.

1.7 ACTION SUBMITTALS

A. Product Data: Manufacturer’s data sheets for metal wall backup panels and accessories.

B. Shop Drawings: Prepared by manufacturer or manufacturer's authorized dealer. Installation drawings for metal wall backup panels, flashing, accessories, and anchorage systems must indicate completely dimensioned structural frame and erection layouts, openings in the wall, special framing details, and construction details at corners, building intersections and flashing, location and type of mastic and metal filler strips.

1. Indicate coordination dimensions related to structural support system elements provided by others.
2. Include structural data indicating compliance with performance requirements.

1.8 INFORMATIONAL SUBMITTALS

A. Product Test Reports: Indicating compliance of products with requirements, from a qualified independent testing agency.

B. Qualification Information: For Installer firm, Installer's field supervisor.

C. **Buy American Act certification**.

1.9 CLOSEOUT SUBMITTALS

A. Maintenance data.

1.10 DELIVERY, STORAGE, AND HANDLING

A. Protect metal wall backup panels during shipping, handling, and storage to prevent staining, denting, or other visible damage. Deliver, unload, store, and erect metal wall backup panels and accessory items without misshaping panels or exposing panels to surface damage from weather or construction operations. Protect from exposure to sunlight.

1.11 WARRANTY

A. **Special Manufacturer's Warranty**: On manufacturer's standard form, in which manufacturer agrees to repair or replace metal wall backup panel assemblies that fail in materials and workmanship within [2] years from the date of substantial completion.

B. **Weathertight Wall Warranty**: Provide manufacturer's standard limited weathertight wall warranty in which manufacturer will warrant against leakage under the specified project design criteria or normal weather and atmospheric conditions for a period of ten years based on a review of final installation drawings and verification of installation by a manufacturer trained installer. Project installation inspection is at the sole discretion of the manufacturer.

PART 2 - PRODUCTS

2.1 SYSTEM DESCRIPTION

A. Insulated-Core Metal Wall Backup Panel System: Metal wall backup panel installation consisting of foamed-insulation-core metal-skinned wall panels and accessories, attached to

metal framing with specified clips or rails, serving as combined thermal, air, and moisture barrier and support for **brick veneer** specified in another section.

2.2 MANUFACTURERS

A. Basis of Design: **Metl-Span, BW Stretch**. Provide basis of design product or comparable products of other manufacturer approved by Architect in accordance with Instructions to Bidders and Division 01 General Requirements.

1. Metl-Span, a Nucor company; Lewisville, Texas Tel: 214-897-6822; Email: Eamon.Lyons@nucor.com; Web: metlspan.com.

B. Provide basis of design product [, or comparable product approved by Architect prior to bid].

2.3 METAL WALL BACKUP PANELS

A. Insulated Composite Backup Panels: Foamed-insulation-core metal-skinned panels with interlocking side joinery and butted end joints. Fabricate in factory with metal facings bonded to foamed-in-place core. Fabricate interior metal face with planking ribs. Form interlocking joinery to accept concealed fasteners for attachment to supports.

1. Basis of Design Product: **Metl-Span BW Stretch Insulated Backup Wall Panel**.

B. **BW Universal System™ Panel Faces**: [0.031-inch/22-ga. (0.794-mm)] thick aluminum-zinc alloy coated steel sheet: ASTM A 792/A 792M, Class AZ50 (Class AZM150) coating designation; structural quality, with smooth surface.

C. Panel Face Finish: 0.2-mil (0.051-mm) thick primer coat and 0.2-mil (0.051-mm) thick primer coat on interior face.

D. Panel Core: Foamed-in-place modified polyisocyanurate, closed-cell, CFC and HCFC free, with minimum density of 2.2 lb./cu. ft. (39 kg/cu. m), minimum compressive strength of 15 lb./sq. in. (103 kPa), and a minimum shear strength of 18 lb./sq. in with a shear modulus of minimum 550 lb./sq. in..

E. Panel Sealant/Vapor Seal: Factory-applied non-curing butyl.

F. **BW Universal System™ Horizontal Backup Panel Thickness and Thermal Resistance (75° mean core temperature)**: [2 inches (51 mm); R-13.6, U-.074] using ASTM C518 and C1363 or a computer model test.

G. Panel Width: BW Universal System [36 inches (914 mm)]

H. Panel Configuration: Provide metal wall backup panels configured for the following application system:

Horizontal metal wall backup panel for masonry veneer, with manufacturer-furnished Hohmann and Barnard Joint Anchors and Surface Mount Anchors in panel joints and attached at panel midpoints.

2.4 METAL WALL BACKUP PANEL ACCESSORIES

A. Sub-girts: Metallic-coated steel sheet, ASTM A 653/A 653M, G90 (Z275) coating designation; structural quality, 0.054-inch/16-gage (1.37-mm) thick.

B. Panel Attachment Clips: Metallic-coated steel sheet, ASTM A 653/A 653M, G90 (Z275) coating designation, of thickness indicated, configured to serve as attachment points for secondary metal framing where indicated, manufacturer-furnished.

C. Self-Adhering Flashing Tape recommended by panel manufacturer for application.

D. Joint Sealants:

1. Concealed: Non-skinning butyl sealant, AAMA 809.2.
2. Exposed: Elastomeric silicone sealant, ASTM C 920, as recommended by panel manufacturer.

E. Fasteners: Corrosion-resistant, self-tapping and self-drilling screws, bolts, nuts, and other fasteners as recommended by panel manufacturer for application.

1. Size fasteners to prevent penetration of interior panel facing where required.

2.5 FABRICATION

A. General: Fabricate metal wall backup panels at the factory, using manufacturer's standard procedures and processes identical to tested units and as necessary to meet performance requirements.

1. Fabricate metal wall backup panels with joints between panels designed to form weathertight seals.
2. Factory form metal wall backup panels in a continuous process with no glues or adhesives between dissimilar materials. Trim and square edges of sheets with no displacement of face sheets or protrusion of core material.

PART 3 - EXECUTION

3.1 EXAMINATION

A. Examine building structure with Installer present. Inspect for erection tolerances and other conditions that would adversely affect installation.

B. Wall Substrate: Confirm that wall substrate is within tolerances acceptable to metal wall panel system manufacturer.

1. Maximum deviations acceptable:

a. 3/8 inch (9.5 mm) in any 20-foot (6.1 m) length vertically or horizontally from the framing face plane.

b. 3/4 inch (19 mm) maximum deviation from the framing face plane on any building elevation.

C. Framing: Inspect framing that will support metal wall backup panel system to determine if support components are installed as indicated on approved shop drawings.

D. Advise G.C, in writing, of out-of-tolerance work and other deficient conditions prior to proceeding with metal wall panel system installation.

E. Correct out of tolerance work and other deficient conditions prior to proceeding with insulated composite backup panel installation.

3.2 METAL WALL BACKUP PANEL SYSTEM INSTALLATION

A. General: Install metal wall backup panel system in accordance with approved shop drawings and manufacturer's recommendations.

B. Installation: Attach backup panels to supports at each panel connection point indicated on approved shop drawings.

1. Install with drain plane of panel facing weather side of installation.
2. Fasten insulated metal wall backup panels to building framing with continuous integral attachment sub-girts or studs, or manufacturer provided panel attachment.
3. Horizontal Joinery: Working from base to top of metal wall backup panel system installation, engage upper panel over lower panel to form a weather tight joint oriented to allow gravity drainage.
4. Vertical Joinery:

a. Install vertical butt joints tight with no gap, set against continuous supports with a backer plate and sealant installed per manufacturer installation details.
b. Set panel ends in continuous bead of non-curing butyl sealant as indicated in manufacturer's installation details.
c. Seal butt joints between adjacent panels with a continuous strip of self-adhering flashing at bottom row of panels and where additionally recommended by manufacturer or architect.

3.3 ERECTION TOLERANCES

A. Installation Tolerances: Align metal wall backup panel system within installed tolerance of 1/4 inch in 20 feet (6 mm in 6.1 m), noncumulative, on level and plumb and location lines as indicated and within 1/8 inch (3 mm) offset of adjoining faces and of alignment of matching profiles.

END OF SECTION 074213.01

SECTION 07 54 19 - POLYVINYL-CHLORIDE (PVC) ROOFING

PART 1 GENERAL

1.1 SUMMARY

A. Section Includes:
1. Roofing membrane.
2. Membrane base flashings.
3. PVC laminated sheet metal flashings.
4. Accessory products and attachment components.
5. Cover board, over roof insulation.
6. Installation of roof insulation materials specified in Section 07 22 00 – Roof and Deck Insulation.

B. Related Sections:
1. Section 01 25 00 – Substitution Procedures.
2. Section 06 10 00 – Rough Carpentry.
3. Section 06 16 00 – Sheathing.
4. Section 07 21 00 – Thermal Insulation.
5. Section 07 62 00 – Flashing and Sheet Metal.
6. Section 22 14 13 – Facility Storm Drainage Piping.

1.2 REFERENCES

A. American National Standards Institute/Single Ply Roofing Institute (ANSI/SPRI):
1. ANSI/SPRI IA-1 – Standard Field Test Procedure for Determining the Uplift Resistance of Insulation and Insulation Adhesives over Various Substrate.
2. ANSI/SPRI RP-4-02 – Wind Design Standard for Ballasted Single-Ply Roofing Systems.
3. ANSI/SPRI/ES-1-03 – Wind Design Standard for Edge Systems Used with Low Slope Roofing Systems.

B. American Society of Civil Engineers (ASCE): ASCE 7 – Minimum Design Loads for Buildings and Other Structures.

C. ASTM International (formerly American Society for Testing and Materials) (ASTM):
1. ASTM C1177 – Standard Specification for Glass Mat Gypsum Substrate for Use as Sheathing.
2. ASTM C1278 – Standard Specification for Fiber-Reinforced Gypsum Panel.
3. ASTM C1549 – Standard Test Method for Determination of Solar Reflectance Near Ambient Temperature Using a Portable Solar Reflectometer.
4. ASTM D570 – Standard Test Method for Water Absorption of Plastics.
5. ASTM D751 – Standard Test Methods for Coated Fabrics.
6. ASTM D1004 – Standard Test Method for Tear Resistance (Graves Tear) of Plastic Film and Sheeting.
7. ASTM D1079 – Standard Terminology Relating to Roofing, Waterproofing, and Bituminous Materials.

8. ASTM D1204 – Standard Test Method for Linear Dimensional Changes of Nonrigid Thermoplastic Sheeting or Film at Elevated Temperature.
9. ASTM D2136 – Standard Test Method for Coated Fabrics – Low-Temperature Bend Test.
10. ASTM D2565 – Standard Practice for Operating Xenon-Arc Exposure of Plastics Intended for Outdoor Applications.
11. ASTM D3045 – Standard Practice for Heat Aging of Plastics Without Load.
12. ASTM D4263 – Standard Test Method for Indicating Moisture in Concrete by the Plastic Sheet Method.
13. ASTM D4434 – Standard Specification for Poly(Vinyl Chloride) Sheet Roofing.
14. ASTM D5602 – Standard Test Method for Static Puncture Resistance of Roofing Membrane Specimens.
15. ASTM D5635 – Standard Test Method for Dynamic Puncture Resistance of Roofing Membrane Specimens.
16. ASTM E96 – Standard Test Methods for Water Vapor Transmission of Materials.
17. ASTM E108 – Standard Test Methods for Fire Tests of Roof Coverings.
18. ASTM E119 – Standard Test Methods for Fire Tests of Building Construction and Materials.
19. ASTM E903 – Standard Test Method for Solar Absorptance, Reflectance, and Transmittance of Materials Using Integrating Spheres.
20. ASTM E1980 – Standard Practice for Calculating Solar Reflectance Index of Horizontal and Low-Sloped Opaque Surfaces.
21. ASTM F2170 – Standard Test Method for Determining Relative Humidity in Concrete Floor Slabs Using in situ Probes.
22. ASTM G154 – Standard Practice for Operating Fluorescent Ultraviolet (UV) Lamp Apparatus for Exposure of Nonmetallic Materials.

D. California Code of Regulations (CCR), Title 24, Part 2: California Building Code (CBC).

E. Environmental Protection Agency (EPA): Energy Star Certified Roof Products List.

F. Factory Mutual (FM) and Factory Mutual Global – Factory Mutual Engineering Corporation (FMG): Roof Assembly Classifications:
   1. FM Approvals: RoofNav, listing of FM approved roofing products and assemblies.
   2. FM – Approval Guide.
   3. FM 4450 – Approval Standard for Class 1 Insulated Steel Deck Roofs.
   4. FM 4470 – Approval Standard for Single-Ply, Polymer-Modified Bitumen Sheet, Built-Up Roof (BUR), and Liquid-Applied Roof Assemblies for Use in Class 1 and Noncombustible Roof Deck Construction.
   5. FM Global Property Loss Prevention Data Sheets: 1-28 Wind Design.
   6. FM Global Property Loss Prevention Data Sheets: 1-29 Roof Deck Securement and Above-Deck Roof Components.

G. National Roofing Contractors Association (NRCA): Roofing and Waterproofing Manual.

H. Underwriters Laboratories (UL):
   1. Fire Hazard Classifications; Fire Resistance Products, Systems and Designs, UL Product iQ.
   2. UL 790 – Standard for Standard Tests Methods for Fire Tests of Roof Coverings.

1.3 SYSTEM DESCRIPTION

A. Adhered thermoplastic PVC sheet roofing system. See Schedule in Part 3 below for specific roofing system descriptions.
   1. PVC membrane.
   2. Cover board.
   3. Extruded polystyrene insulation (XPS). Expanded polystyrene insulation (EPS) and polyisocyanurate (Polyiso) insulation are not acceptable.

1.4 SYSTEM REQUIREMENTS

A. General:
   1. Provide installed roofing membrane and base flashings that remain watertight; do not permit the passage of water; and resist specified uplift pressures, thermally induced movement, and exposure to weather without failure.
   2. Comply with manufacturer details for PVC Single Ply Membrane, following basic NRCA recommended details, as approved by membrane manufacturer.
   3. External Fire Resistance: UL Class A, including field and all parapet curbs.
   4. Field-of-Roof Wind Uplift: Minimum FM 1-90.
   5. Corner Uplift Design Pressure by Project Engineer: -62.3 lbf/sq. ft.
   6. Perimeter Uplift Design Pressure by Project Engineer: -47.6 lbf/sq. ft.
   7. Field-of-Roof Uplift Design Pressure by Project Engineer: -34.7 lbf/sq. ft.
   8. Completed installation must comply with indicated CBC Design Number, where occurs.
   9. Completed roof surfaces must not pond water.
   10. Roofing materials to be compatible with one another under conditions of service and application required, as demonstrated by roofing membrane manufacturer based on testing and field experience.

B. Installation and materials approved by roofing manufacturer, meeting requirements of CCR Title 24, specified requirements, and Reference Standards.

C. FM Listing:
   1. Provide roofing membrane, base flashings, and component materials that comply with requirements in FM 4450 and FM 4470 as part of a membrane roofing system and that are listed in FM's "Approval Guide" for Class 1 or noncombustible construction, as applicable.
   2. Identify materials with FM markings.
   3. Each roof assembly must have current RoofNav report and assembly number showing compliance with FM requirements and all other criteria specified herein or shown on Drawings.
      a. Exception: Where insulation thickness for the project roof exceeds the maximum thickness shown in RoofNav assemblies, the roof system is permissible provided that the roof system matches all other criteria in this specification and in the listed RoofNav assembly.
   4. For roof structures using plywood substrate (roof deck), where no current RoofNav assembly number can be found, the roof assembly shall be fastened to the plywood per structural requirements and in accordance with RoofNav assembly numbers which have the following:
      a. Assembly Characteristics:

1) Roof System: Single-ply system.
2) Application: New roof
3) Cover Securement: Adhered.
4) Deck Type: Steel or existing.
5) Slope: Minimum 0.5 inches in 12 inches.

b. Assembly Ratings:
1) Wind Uplift: Per structural calculations, with minimum 90 psf.
2) Internal Fire: NC or 1.
3) Exterior Fire: Class A.
4) Hail: MH or SH.

D. Conform to CCR Title 24 for roof assembly fire hazard requirements.

E. Underwriters Laboratories, Inc. (UL): Conform to requirements of indicated UL Assembly.

F. Energy Star Listing: Roofing system must be listed on the ENERGY STAR "Certified Roof Products List" for low-slope roof products.

G. Fire-Test-Response Characteristics/Requirements:
1. Provide membrane roofing materials with the fire-test-response characteristics indicated as determined by testing identical products per test method below by UL, FMG, or another testing and inspecting agency acceptable to authorities having jurisdiction.
2. Materials must be identified with appropriate markings of applicable testing and inspecting agency.
3. Exterior Fire-Test Exposure: For application and roof slopes indicated:
a. Class A per UL 790, for all roof decks.
b. Class A per ASTM E108, for all roof decks, except combustible decks.

H. Provide roofing system with Solar Reflectance Index not less than 78 when calculated in accordance with ASTM E1980 based on testing identical products by a qualified testing agency.

I. Fire-Resistance Ratings: Comply with fire-resistance-rated assembly designs indicated. Identify products with appropriate markings of applicable testing agency.

J. Roofing components must be secured to the structural deck in compliance with FMG Property Loss Prevention Data Sheet 1-29 for the more restrictive of wind loads determined by ASCE/SEI 7 and FMG Property Loss Prevention Data Sheet 1-28.

1.5 SUBMITTALS

A. Submit under provisions of Sections 01 33 00 – Submittal Procedures and 01 33 23 – Shop Drawings, Product Data, Samples.

B. Product Data: Provide data on product characteristics, performance criteria, limitations.
1. For adhesives and sealants, include printed statement of VOC content.
2. For roof materials, documentation indicating that roof materials comply with Solar Reflectance Index requirement.
3. For adhesives and sealants used inside the weatherproofing system, documentation indicating that products comply with the testing and product requirements of the

California Department of Public Health's (formerly, the California Department of Health Services') "Standard Method for the Testing and Evaluation of Volatile Organic Chemical Emissions from Indoor Sources Using Environmental Chambers."

C. Manufacturer's Installation Instructions:
   1. Indicate special environmental conditions required for installation.
   2. Indicate adhesive recommendations.
   3. Shop Drawings:
      a. Indicate fastener patterns and attachment rate meeting specified FM Listing for each roof area and to address each uplift condition.
      b. Include plans, elevations, sections, details, and attachments to other Work.
      c. Include base flashings and membrane terminations.
      d. Include layouts for membrane and insulation board, including tapered insulation
   4. Indicate installation techniques.

D. Manufacturer's Certificates and Reports:
   1. Certify that products meet or exceed specified requirements.
   2. Certify that the roof membrane system has been installed in accordance with the manufacturer’s directions.
   3. Certify that insulation is approved by manufacturer for use with specified roofing membrane materials.
   4. Certify that material thickness for the supplied material is within 2 mils of specified thickness.
   5. Signed by roofing manufacturer certifying that roofing system complies with requirements specified in “System Description” article above.
   6. Submit evidence of meeting design requirements.
   7. Submit current RoofNav report showing exact system to be installed and corresponding RoofNav assembly number. RoofNav report must include statement that the corresponding RoofNav assembly number meets minimum System Requirements for Wind Uplift.

E. System Performance: Provide documentation that the roofing components submitted meet or exceed the system performance requirements as an assembly.

F. Maintenance Data: Provide documentation for maintenance of roofing system to be included in maintenance manuals.

G. Inspection Report: Provide copy of roofing system manufacturer’s inspection report of completed roofing installation.

H. Submittal Schedule:
   1. Submittal must include the following documents.

R=Required	Literature	Sample
1. Roofing Membrane and Flashing Sheets (reinforced and non-reinforced)	R	R
2. Walkway Protection (each type)	R	R
3. Adhesive – Membrane	R	
4. Fastener(s) – Preclad Metal	R	R
5. Securement / Termination Bar	R	
6. PVC cord	R	
7. Sealant (and primer)	R	
8. Pipe Supports	R	
9. Tape Separator	R	
10. Manufacturer sample warranty	R	
11. Manufacturer approved applicator letter	R	
12. Manufacturer confirmation of specification review and acceptance, and intent to warrant	R	
13. Intended Roof Membrane Layout (Plan)	R	
14. Intended Rigid Roof Insulation Layout (Plan), including fastener patterns	R	
15. Rigid Roof Insulation (all types)	R	
16. FM Global Approval Listing for entire roofing assembly	R	
17. FM Global Wind Uplift Listing for entire roofing assembly	R	
18. RoofNav Report	R	
19. UL Approval Listing	R	
20. Adhesion Test Results	R	

1.6 QUALIFICATIONS

A. Manufacturer: Company specializing in manufacturing the products specified in this Section with the following:
   1. 20 years' documented experience with manufacturing PVC roofing.
   2. Documentation of a PVC roofing system that has been installed for a minimum of 20 years and has a 10 year, or longer, warranty.
   3. FMG approval for membrane roofing system identical to that used for this Project.

B. Applicator: Company specializing in performing the work of this Section with five years' documented experience and approved by manufacturer.

1.7 QUALITY ASSURANCE

A. Source Limitations: Obtain components for membrane roofing system from or approved by roofing membrane manufacturer.

B. Preliminary Roofing Conference:
   1. Before starting roof deck construction and/or one week prior to commencing work of this Section, conduct conference at Project site.

2. Prepare an agenda, preside over the conference, and record minutes, and distribute copies within two days after the conference to participants, with two copies to the CDCR Representative.
3. Meet with the CDCR Representative, Subcontractor, testing and inspecting agency representative, roofing installer, roofing system manufacturer's representative, deck installer, and installers whose work interfaces with or affects roofing including installers of roof accessories and roof-mounted equipment.
4. Review methods and procedures related to roof deck construction and roofing system including.
5. Review methods and procedures related to roofing installation, including manufacturer's written instructions, approved submittals, and Contract Documents.
6. Review and finalize construction schedule and verify availability of materials, Installer's personnel, equipment, and facilities needed to make progress and avoid delays.
7. Examine deck substrate conditions and finishes for compliance with requirements, including flatness and fastening.
8. Review structural loading limitations of roof deck during and after roofing.
9. Review base flashings, special roofing details, roof drainage, roof penetrations, equipment curbs, and condition of other construction that will affect roofing system.
10. Review governing regulations and requirements for insurance and certificates if applicable.
11. Review temporary protection requirements for roofing system during and after installation.
12. Review roof observation and repair procedures after roofing installation.

1.8 DELIVERY, STORAGE, AND HANDLING

A. Deliver roofing materials to Project site in original containers with seals unbroken and labeled with manufacturer's name, product brand name and type, date of manufacture, and directions for storing and mixing with other components.

B. Store liquid materials in their original undamaged containers in a clean, dry, protected location and within the temperature range required by roofing system manufacturer.
   1. Protect stored liquid material from direct sunlight.
   2. Discard and legally dispose of liquid material that cannot be applied within its stated shelf life.

C. Roof Insulation:
   1. Protect roof insulation materials from physical damage and from deterioration by sunlight, moisture, soiling, and other sources.
   2. Store in a dry location.
   3. Comply with insulation manufacturer's written instructions for handling, storing, and protecting during installation.

D. Handle and store roofing materials and place equipment in a manner to avoid permanent deflection of deck.

1.9 ENVIRONMENTAL REQUIREMENTS

A. Do not install materials when existing or forecasted temperature or weather conditions are detrimental to successful installation, or are not in compliance with manufacturers' recommendations, written instructions or warranty requirements.

1.10 WARRANTY

A. Comply with all warranty procedures required by manufacturer, including notifications, scheduling, and inspections.

B. Manufacturer's Warranty:
   1. Manufacturer agrees to repair or replace components of roofing system that fail in materials or workmanship within specified warranty period.
   2. Warranty includes membrane roofing, base flashings, walkway products[, roof insulation][, fasteners][, cover boards][, substrate boards][, roofing accessories][, roof pavers], and other components of roofing system.
   3. Warranty must be Non-Prorated and provide No Dollar Limit (NDL).
   4. Warranty Period: Manufacturer's maximum warranty available without added cost, minimum 10 years from date of completed installation.

PART 2 PRODUCTS

2.1 BASE PRODUCTS

A. Products name or identified by make or model number, or other designation and described below are base products. Base products establish the standards of type, function, dimension, in-service performance, physical properties, appearance, warranty, cost, and other characteristics required by the Project.

B. Products of manufacturers not listed may be proposed for substitution subject to the requirements of Section 01 25 00 – Substitution Procedures.

2.2 PRODUCTS

1. Membrane: ASTM D4434, Type III or Type II Grade 1; reinforced Polyvinyl Chloride sheet; 80 mils (0.080 inch) thick; white exposed face color; no backing; conforming to the following criteria:

Properties	**Test**	**Min. Results**
Tearing Strength, lbf (N)	ASTM D1004	10 lbf min. (45 Newtons)
Weight Change After Immersion in Water	ASTM D570	3.0 % max.
Seam Strength, min., (% of breaking strength)	ASTM D751	75%
Retention of Properties After Heat Aging	ASTM D3045	--
Tensile Strength, min., (% of original)	ASTM D751	90%
Elongation min. (% of original)	ASTM D751	90%
Low Temperature Ben, -40 deg. F (-40 degrees C)	ASTM D2136	Pass

Accelerated Weathering Test	ASTM G154	
Cracking (7x magnification)	--	None @ 5,000 hours
Discoloration (by observation)	--	Negligible @ 5,000 hours
Crazing (7x magnification)	--	None @ 5,000 hours
Static Puncture Resistance, 33 lbf	ASTM D5602	Pass
Dynamic Puncture Resistance, 14.7 ft-lbf	ASTM D5635	Pass
Breaking Strength (lbf/in.)	ASTM D751	200 lbf/in
Tear Resistance, min. (lbf)	ASTM D1004	10 lbf
Linear Dimensional Change (shrinkage) %	ASTM D1204	0.5 typical
Solar Reflectance:	ASTM C1549	0.70 min.
Thermal Emissivity:	ASTM E903	0.75 min.
Solar Reflective Index:	ASTM E1980	78 min. for<2:12 29 min. for>2:12

Energy Smart Color: White.

2. Acceptable Manufacturers/Products:
   a. Basis of Design, meeting the criteria and requirements specified herein:
      1) Sika Sarnafil; [G410 Adhered Single Ply Roofing Membrane].
      2) For manufacturers/products not listed, comply with substitution requirements in Section 01 25 00 – Substitution Procedures.

B. Sheet Membrane Flashing: Roofing manufacturer's standard sheet flashing of same material type, reinforcement, and color as PVC sheet membrane; minimum 60 mil thickness.

C. PVC-Laminated Sheet Metal Flashing: 25-gauge G90 galvanized steel sheet laminated to 20 mil non-reinforced membrane in soft white color used for flashing and edge metal detailing.

D. Cover Board:
   1. Cover board: Siliconized gypsum sheathing board; with fiberglass facer mat complying with ASTM C1177, or non-faced homogenous composition of gypsum and cellulose fiber complying with ASTM C1278.
      a. 1/2-inch minimum thickness.
   2. Acceptable Manufacturers/Products, as listed below and meeting the criteria and requirements specified herein, will be acceptable:
      a. Georgia Pacific; DensDeck Prime Roof Board.
      b. USG;Securock Gypsum-Fiber Roof Board.
      c. National Gypsum; DEXcell FA Glass Mat Roof Board.
      d. For manufacturers/products not listed, comply with substitution requirements in Section 01 25 00 – Substitution Procedures.

E. Insulation: As specified in Section 07 22 00 – Roof and Deck Insulation.

F. Cants: 4-inch x 4-inch pressured-treated perlite, or as approved by roofing system manufacturer for warranted system.

G. Nailers at Roof Edges, Parapet Caps and Curbs:
   1. Wood: #2 wolmanized pressure-treated wood.

2. Metal: One of the following where most appropriate for roofing conditions and FM approval:
   a. 20-gauge galvanized metal box assembly; ANSI/SPRI/FM 4435/ES-1 tested and approved with FM ratings indicated in "System Requirements" Article herein.
      1) Acceptable Manufacturers/Products, as listed below and meeting the criteria and requirements specified herein, will be acceptable:
         a) Hickman Edge Systems; EdgeBox R1.
         b) For manufacturers/products not listed, comply with substitution requirements in Section 01 25 00 – Substitution Procedures.
   b. Heavy-gauge extruded aluminum special shapes and sizes; ANSI//SPRI/FM 4435/ES-1 tested and approved with FM ratings indicated in "System Requirements" Article herein.
      1) Acceptable Manufacturer/Products, as listed below and meeting the criteria and requirements specified herein, will be acceptable:
         a) Metal-Era Inc.; Eliminator-T.
         b) For manufacturers/products not listed, comply with substitution requirements in Section 01 25 00 – Substitution Procedures.
   c. Where FM approval is not required, 16-gauge pair of hot-dipped galvanized metal "C" profile closures nested to create a custom-fabricated box profile; see Drawings.
      1) Must be able to resist forces as indicated in "System Requirements" Article herein.
      2) Must be able to be adjusted as required for particular roof slope during installation.]

H. Adhesives:
   1. Chemically compatible with roof system components.
   2. Roofing manufacturer's recommended bonding adhesives for fully adhered membrane.
   3. Adhesives and sealants that are used inside the weatherproofing system must comply with the following limits for VOC content when calculated in accordance with 40 CFR 59, Subpart D (EPA Method 24):
      a. Plastic Foam Adhesives: 50 g/L.
      b. Gypsum Board and Panel Adhesives: 50 g/L.
      c. Multipurpose Construction Adhesives: 70 g/L.
      d. Fiberglass Adhesives: 80 g/L.
      e. Contact Adhesives: 80 g/L.
      f. Plastic Cement Welding Compounds: 350 g/L.
      g. PVC Welding Compounds: 510 g/L.
      h. Other Adhesives: 250 g/L.
      i. Single-Ply Roof Membrane Sealants: 450 g/L.
      j. Non-membrane Roof Sealants: 300 g/L.
      k. Sealant Primers for Nonporous Substrates: 250 g/L.
      l. Sealant Primers for Porous Substrates: 775 g/L. n.

I. Sealants: Roofing manufacturer's recommended sealants for fully adhered membrane.

J. Walkway Protection:
   1. General: See Drawings for walkway protection locations and types.
   2. Walkway must be 36 inches wide minimum, and 72 inches wide minimum at mechanical unit access panels and at locations of routine maintenance.

3. Gridded PVC Roof Walkway: A rolled-out open grid walkway protection mat used to protect roofing membrane from mechanical abuse, with cross directional top ribs and a drainage rating of V10 per DIN 51130.
   a. Required Slip Resistance:
      1) Minimum slip resistant rating of 0.6/0.5 per ASTM F1677.
      2) Minimum certified slip resistant rating of R10 per DIN 51130.
   b. Acceptable Manufacturers/Products: Basis of Design, meeting the criteria and requirements specified herein:
      1) Sika Sarnafil; Crossgrip XTRA.
      2) Or comparable products by approved roofing manufacturer.
      3) For manufacturers/products not listed, comply with substitution requirements in Section 01 25 00 – Substitution Procedures.
4. Weldable PVC Roof Walkway Membrane: A rolled-out walkway with textured surface used to protect roofing membrane from mechanical abuse.
   a. Required Slip resistance:
      1) Walkway surface must have a textured raised pattern and a minimum static coefficient of friction of 0.5 when dry and 0.6 when wet.
   a. Acceptable Manufacturers/Products: Basis of Design, meeting the criteria and requirements specified herein:
      1) Sika Sarnafil; Sarnatred V.
      2) Or comparable products by approved roofing manufacturer.
      3) For manufacturers/products not listed, comply with substitution requirements in Section 01 25 00 – Substitution Procedures.

K. Miscellaneous Accessories: Provide pourable sealers, preformed cone and vent sheet flashings, preformed inside and outside corner sheet flashings, T-joint covers, termination reglets, cover strips, neoprene washers at fastener penetrations, and other accessories for complete weather tight installation.

L. Equipment:
   1. Screw guns: Depth, and torque sensitive.
   2. Generator.
   3. Drills for concrete fasteners.
   4. Membrane heat welder.

PART 3 EXECUTION

3.1 GENERAL

A. Install all materials in accordance with manufacturer's written instructions, to maintain required warranty, and to meet requirements of approved roof assembly.

3.2 EXAMINATION

A. Examine substrates, areas, and conditions, with Installer present, for compliance with the following requirements and other conditions affecting performance of roofing system:
   1. Remove sharp projections.
   2. Verify that roof openings and penetrations are in place and set and braced and that roof drains are securely clamped in place.

3. Verify substrate does not have depressions that may cause water ponding after final installation of roofing assembly.
   a. Inspect substrate for flatness. Any depressions greater than 1/2-inch over a 10-foot length must be repaired to achieve a uniform flat plane.
      1) For metal decks: Install layer(s) of 1/4-inch-thick thermal barrier underlayment board or cementitious board with subsequent layer joints, if used, offset 6 inches minimum and as necessary to achieve a uniform flat plane. All fill materials used must comply with all UL Listing requirements and roofing system manufacturer's warranty requirements. For any depressions greater than 1/2-inch over a single area greater than 500 sf, or for any conditions where structural integrity of the roof deck is compromised, contact the CDCR Representative.

B. Do not proceed with roofing until all unsatisfactory conditions have been reported to the CDCR Representative and corrected. Beginning application means acceptance of existing conditions meeting the requirements of this Section.

3.3 PREPARATION

A. Clean substrate of dust, debris, moisture, and other substances detrimental to roofing installation in accordance with roofing system manufacturer's written instructions. Remove sharp projections.

B. Prevent materials from entering and clogging roof drains and conductors and from spilling or migrating onto surfaces of other construction. Remove roof-drain plugs when no work is taking place or when rain is forecast.

C. Complete terminations and base flashings and provide temporary seals to prevent water from entering completed sections of roofing system at the end of the workday or when rain is forecast. Remove and discard temporary seals before beginning work on adjoining roofing.

3.4 INSULATION APPLICATION

A. Ensure substrate and insulation is clean and dry.

B. Adhesively apply field insulation in two layers minimum.

C. Attach insulation boards: Install each layer of insulation and adhere to substrate as required by listed assembly requirements, and as follows:
   1. Attach first layer of insulation boards to structural deck in accordance with insulation manufacturer's instructions, approved shop drawings, and assembly listing.
   2. Attach subsequent layers of insulation boards to the previous layer of insulation boards with joints staggered minimum 6 inches from joints of previous layer in accordance with insulation manufacturer's instructions, approved shop drawings, and assembly listing.

D. Place the constant thickness layers first and the tapered thickness insulation layers second for required slope pattern in accordance with manufacturer's instructions and approved shop drawings.

E. Minimum Total Insulation Thickness: As required to achieve a minimum R-30 insulation value.

F. Lay boards with edges in moderate contact without forcing, 1/4-inch maximum joint width. Cut insulation to fit neatly to perimeter blocking and around penetrations through roof.

G. Tapered Insulation:
   1. Adhesively apply tapered insulation to form slopes or crickets as indicated or required.
   2. Lay tapered boards for a distance of 24 inches back from roof drains for positive drainage.
   3. Attach to base insulation as required to prevent shifting.
   4. Minimum Slope after Installation: 1/2 inch per foot.
   5. Provide smooth transitions. Abrupt or vertical drops not allowed at joints.

H. Apply no more insulation than can be covered with membrane in same day and before approaching precipitation.

I. Tape joints of insulation in accordance with insulation manufacturer's instructions.

J. Install temporary water cutoffs at completion of work each day and remove upon resumption of work.

3.5 COVER BOARD APPLICATION

A. Adhesively apply one of layer cover board with joints staggered minimum 6 inches from joints of top layer of thermal insulation and tapered insulation in accordance with roof membrane manufacturer's recommendations, FMG assembly requirements, and approved shop drawings.

3.6 ADHERED ROOFING MEMBRANE INSTALLATION

A. Adhesively apply roofing membrane over area to receive roofing in accordance with membrane roofing system manufacturer's written instructions, FMG assembly requirements, and approved shop drawings.
   1. Unroll roofing membrane and allow it to relax before installing.

B. Start installation of roofing membrane in presence of membrane roofing system manufacturer's technical personnel.

C. Accurately align roofing membrane and maintain uniform side and end laps of minimum dimensions required by manufacturer. Stagger end laps.

D. Bonding Adhesive:
   1. Apply bonding adhesive to substrate at rate required by manufacturer before installing roofing membrane.
   2. Do not apply bonding adhesive to splice area of roofing membrane.

E. Mechanically or adhesively fasten roofing membrane securely at terminations, penetrations, and perimeter of roofing.

F. Apply roofing membrane with side laps shingled with slope of roof deck where possible.

G. Seams:

1. Clean seam areas, overlap roofing membrane, and hot-air weld side and end laps of roofing membrane in accordance with manufacturer's written instructions to ensure a watertight seam installation.
2. Test lap edges with probe to verify seam weld continuity. Apply lap sealant to seal cut edges of roofing membrane as required by roof membrane manufacturer.
3. Verify field strength of seams a minimum of twice daily and repair seam sample areas.
4. Repair tears, voids, and lapped seams in roofing membrane that does not meet requirements.

H. Spread sealant or mastic bed over deck drain flange at deck drains and securely seal roofing membrane in place with clamping ring.

3.7 BASE FLASHING INSTALLATION

A. Install sheet flashings and preformed flashing accessories and adhere to substrates in accordance with membrane roofing system manufacturer's written instructions and approved shop drawings.

B. Apply bonding adhesive to substrate and underside of sheet flashing at required rate and allow to partially dry. Do not apply bonding adhesive to seam area of flashing.

C. Flash penetrations and field-formed inside and outside corners with sheet flashing.

D. Clean seam areas and overlap and firmly roll sheet flashings into the adhesive. Weld side and end laps to ensure a watertight seam installation.

E. Terminate and seal top of sheet flashings and mechanically anchor to substrate through termination bars.

F. Where membrane terminates at sheet metal flashing, provide two-piece flashings to accommodate future reroofing.

3.8 WALKWAY INSTALLATION

A. Gridded PVC Roof Walkway: Walkway must be secured to the roofing membrane with loops of the roofing membrane welded to the field sheet. Do not adhere walkway directly to roofing membrane. See walkway installation detail on Drawings. Consult manufacturer's Product Data Sheet for additional information.

B. Weldable PVC Roof Walkway Membrane with textured surface: Apply continuous coat of adhesive to roofing membrane and back of walkway material in accordance with roofing manufacturer's written instructions. Apply uniform pressure with roller. Weld entire perimeter of walkway to roofing membrane.

3.9 MANUFACTURER'S FIELD SERVICES

A. Before start, during, and upon completion of installation, membrane manufacturer's technical representative must conduct inspections to ensure that roofing system is installed in accordance with membrane manufacturer's recommended specifications and details.

B. A minimum of [three] site visits must be made by manufacturer's technical representative.

C. Notify the CDCR Representative 48 hours in advance of date and time of each site visit.

D. Final Roof Inspection:
   1. At least one of the manufacturer's site visits must be after completion of the installation.
   2. Submit written report after Final Roof Inspection to the CDCR Representative.

E. Provide certification in accordance with Submittal requirements in this Section.

3.10 FIELD QUALITY CONTROL

A. Perform field testing under provisions of Section 01 45 00 – Quality Control.

B. Testing Agency:
   1. Contractor must engage an independent qualified testing agency to perform the following tasks:
      a. Inspect substrate conditions, surface preparation, membrane application, flashings, protection, and drainage components.
      b. Provide all inspections listed herein and as required by CDCR.
      c. Perform Electronic Field Vector Mapping (EFVM) testing as required and described below.
      d. Inspect for water intrusion after all tests described below.
      e. Prepare written reports after each inspection and submit reports to CDCR Representative.

C. Water and EFVM Testing: Provide the following tests:
   1. All tests as required by roofing manufacturer and to obtain manufacturer's warranty as specified herein.
   2. Temporarily plug all roof drains and flood area with enough water to completely cover clamping ring and area surrounding drains to achieve a minimum of two inches of water head at drain. Use dams if required. Leave water in place for 48 hours.
   3. Water test scuppers similar to roof drains as required by roofing inspector or CDCR.
   4. Monitor weather conditions to prevent damage to building caused by accumulation of water during a rain event.
   5. Arrange for testing agency to inspect for water intrusion.
   6. On the same day, after inspection, remove drain plugs and, wet entire roof membrane, flashings and roof accessories by means of soaker hose at the rate of not less than one inch per hour rain equivalent for a duration of not less than two hours.
   7. Arrange for testing agency to inspect for water intrusion in these areas.
   8. Where solar panels or overburden, such as ballast, pavers, green roofs and similar, occur on roofs, perform EFVM tests by testing agency over the completed waterproof roof membrane to test for capillary defects and/or breaches in the roof membrane. EFVM testing must be performed 24 hours or more after water tests and prior to installation of solar panels and/or overburden.
   9. Arrange for roofing manufacturer's representative to perform inspections as required to achieve specified warranty(ies).
   10. Locate and correct all identified leaks, defects and irregularities.
   11. Repeat tests until no water intrusion is found.
   12. Remove temporary plugs and dams and restore roofs at conclusion of tests.

D. Repair or remove and replace components of membrane roofing system where test results or inspections indicate that they do not comply with specified requirements. Contractor is solely responsible for all repairs or replacement of roofing assembly and all other items damaged by water intrusion.

E. Additional testing and inspecting, at Contractor's expense, must be performed to determine compliance of replaced or additional work with specified requirements.

3.11 PROTECTING AND CLEANING

A. Waterstops:
   1. Install temporary cutoffs around incomplete edges of the roofing assembly at the end of each workday and when work must be postponed because of inclement weather.
   2. Straighten the insulation line using pieces of insulation loosely laid, and seal the roofing systems sheet membrane to the deck or existing membrane.
   3. Use a heavy application of roof cement at least 6 inches in width, overlaid with an embedded reinforcement.
   4. Remove the temporary seals completely when work resumes, cutting out the contaminated membrane.
   5. Remove all sealant, contaminated membrane, insulation fillers, etc. from the work area and properly dispose off-site.

B. Protect membrane roofing system from damage and wear during remainder of construction period. When remaining construction will not affect or endanger roofing, inspect roofing for deterioration and damage, describing its nature and extent in a written report, with copies to the CDCR Representative.

C. Correct deficiencies to or remove membrane roofing system that does not comply with requirements, repair substrates, and repair or reinstall membrane roofing system to a condition free of damage and deterioration at time of Project Completion and in accordance with warranty requirements.

3.12 SCHEDULE

A. General:
   1. See Product descriptions in this specification section for detailed information and requirements for each component listed below.
   2. All proposed roof assemblies must be FMG approved and have an approved current RoofNav report and assembly number. See "Submittals" article herein.
   3. All proposed roof assembles must meet all requirements specified in this specification section.
   4. Roof insulation must be XPS (extruded polystyrene). EPS (expanded polystyrene and Polyiso (polyisocyanurate) insulations are not acceptable.
   5. All roofing must be fully-adhered systems unless noted otherwise.

B. Roof System :
   1. Components:
      a. Single-ply PVC roofing, minimum 0.080 inches thick.
      b. Cover board.

c. XPS insulation.
d. Vapor retarder.
e. Thermal barrier (mechanically fastened).
f. Steel deck.

2. Acceptable Manufacturers: The following manufacturers will be acceptable if they meet all of the requirements and criteria in this specification section.
   a. Sika Sarnafil; RoofNav Assembly Number 289930-0-0.
   b. IB Roof Systems; RoofNav Assembly Number 309059-0-0 (wind uplift 90 lbf/sq.ft.).
   c. IB Roof Systems; RoofNav Assembly Number 353512-0-0 (wind uplift 135 lbf/sq.ft.).
   d. IB Roof Systems; RoofNav Assembly Number 437650-0-0 (wind uplift 90 lbf/sq.ft.).
   e. IB Roof Systems; RoofNav Assembly Number 466028-0-0 (wind uplift 135 lbf/sq.ft.).
   f. For manufacturers/assemblies not listed, comply with substitution requirements in Section 01 25 00 – Substitution Procedures.

END OF SECTION 075419

SECTION 076200 - SHEET METAL FLASHING AND TRIM

PART 1 - GENERAL

1.1 RELATED DOCUMENTS

A. Drawings and general provisions of the Contract, including General and Supplementary Conditions and Division 01 Specification Sections, apply to this Section.

1.2 SUMMARY

A. Section Includes:
   1. Formed low-slope roof sheet metal fabrications.
   2. Roof-drainage sheet metal fabrications.

B. Related Requirements:

   1. Section 061000 "Rough Carpentry" for wood nailers, curbs, and blocking.
   2. Section 075423 “Thermoplastic-Polyolefin (TPO) Roofing” for membrane roofing products and warranty requirements.
   3. Section 074113.16 “Standing Seam Metal Roof Panels” for metal roofing products.

1.3 COORDINATION

A. Coordinate sheet metal flashing and trim layout and seams with sizes and locations of penetrations to be flashed, and joints and seams in adjacent materials.

B. Coordinate sheet metal flashing and trim installation with adjoining roofing and wall materials, joints, and seams to provide leakproof, secure, and noncorrosive installation.

1.4 PREINSTALLATION MEETINGS

A. Preinstallation Conference: Conduct conference at Project site.

   1. Review construction schedule. Verify availability of materials, Installer's personnel, equipment, and facilities needed to make progress and avoid delays.
   2. Review special roof details, roof drainage, roof-penetration flashing, equipment curbs, and condition of other construction that affect sheet metal flashing and trim.
   3. Review requirements for insurance and certificates if applicable.
   4. Review sheet metal flashing observation and repair procedures after flashing installation.

1.5 ACTION SUBMITTALS

A. Product Data: For each type of product.

1. Include construction details, material descriptions, dimensions of individual components and profiles, and finishes for each manufactured product and accessory.

B. Shop Drawings: For sheet metal flashing and trim.

1. Include plans, elevations, sections, and attachment details.
2. Detail fabrication and installation layouts, expansion-joint locations, and keyed details. Distinguish between shop- and field-assembled work.
3. Include identification of material, thickness, weight, and finish for each item and location in Project.
4. Include details for forming, including profiles, shapes, seams, and dimensions.
5. Include details for joining, supporting, and securing, including layout and spacing of fasteners, cleats, clips, and other attachments. Include pattern of seams.
6. Include details of termination points and assemblies.
7. Include details of expansion joints and expansion-joint covers, including showing direction of expansion and contraction from fixed points.
8. Include details of edge conditions, including eaves, ridges, valleys, rakes, crickets, and counterflashings as applicable.
9. Include details of special conditions.
10. Include details of connections to adjoining work.
11. Detail formed flashing and trim at scale of not less than 1-1/2 inches per 12 inches (1:10).

C. Samples for Verification: For each type of exposed finish.

1. Sheet Metal Flashing: 12 inches (300 mm) long by actual width of unit, including finished seam and in required profile. Include fasteners, cleats, clips, closures, and other attachments.
2. Trim, Metal Closures, Expansion Joints, Joint Intersections, and Miscellaneous Fabrications: 12 inches (300 mm) long and in required profile. Include fasteners and other exposed accessories.

1.6 INFORMATIONAL SUBMITTALS

A. Qualification Data: For fabricator.

B. Sample Warranty: For special warranty.

C. Product Certificates: For each type of coping and roof edge flashing that is SPRI ES-1 tested and FM Approvals approved.

1.7 CLOSEOUT SUBMITTALS

A. Maintenance Data: For sheet metal flashing and trim, and its accessories, to include in maintenance manuals.

1.8 QUALITY ASSURANCE

A. Fabricator Qualifications: Employs skilled workers who custom fabricate sheet metal flashing and trim similar to that required for this Project and whose products have a record of successful in-service performance.

1. For copings and roof edge flashings that are SPRI ES-1 tested and FM Approvals approved, shop shall be listed as able to fabricate required details as tested and approved.

1.9 DELIVERY, STORAGE, AND HANDLING

A. Do not store sheet metal flashing and trim materials in contact with other materials that might cause staining, denting, or other surface damage. Store sheet metal flashing and trim materials away from uncured concrete and masonry.

B. Protect strippable protective covering on sheet metal flashing and trim from exposure to sunlight and high humidity, except to extent necessary for period of sheet metal flashing and trim installation.

1.10 WARRANTY

A. Special Warranty on Finishes: Manufacturer agrees to repair finish or replace sheet metal flashing and trim that shows evidence of deterioration of factory-applied finishes within specified warranty period.

1. Exposed Panel Finish: Deterioration includes, but is not limited to, the following:

a. Color fading more than 5 Hunter units when tested according to ASTM D 2244.
b. Chalking in excess of a No. 8 rating when tested according to ASTM D 4214.
c. Cracking, checking, peeling, or failure of paint to adhere to bare metal.

2. Finish Warranty Period: 20 years from date of Substantial Completion.

PART 2 - PRODUCTS

2.1 PERFORMANCE REQUIREMENTS

A. General: Sheet metal flashing and trim assemblies shall withstand wind loads, structural movement, thermally induced movement, and exposure to weather without failure due to defective manufacture, fabrication, installation, or other defects in construction. Completed sheet metal flashing and trim shall not rattle, leak, or loosen, and shall remain watertight.

B. Sheet Metal Standard for Flashing and Trim: Comply with NRCA's "The NRCA Roofing Manual" and SMACNA's "Architectural Sheet Metal Manual" requirements for dimensions and profiles shown unless more stringent requirements are indicated.

C. FM Approvals Listing: Manufacture and install copings and roof edge flashings that are listed in FM Approvals' "RoofNav" and approved for windstorm classification, Class 1-90. Identify materials with name of fabricator and design approved by FM Approvals.

D. SPRI Wind Design Standard: Manufacture and install copings and roof edge flashings tested in accordance with ANSI/SPRI/FM 4435/ES-1 and capable of resisting the following design pressure:

1. Design Pressure: As indicated on Drawings.

E. Thermal Movements: Allow for thermal movements from ambient and surface temperature changes to prevent buckling, opening of joints, overstressing of components, failure of joint sealants, failure of connections, and other detrimental effects. Base calculations on surface temperatures of materials due to both solar heat gain and nighttime-sky heat loss.

1. Temperature Change: 120 deg F (67 deg C), ambient; 180 deg F (100 deg C), material surfaces.

2.2 SHEET METALS

A. General: Protect mechanical and other finishes on exposed surfaces from damage by applying strippable, temporary protective film before shipping.

B. Metallic-Coated Steel Sheet: Provide zinc-coated (galvanized) steel sheet according to ASTM A 653/A 653M, G90 (Z275) coating designation; prepainted by coil-coating process to comply with ASTM A 755/A 755M.

1. Surface: Smooth, flat.
2. Exposed Coil-Coated Finish:
   a. Two-Coat Fluoropolymer: AAMA 621. Fluoropolymer finish containing not less than 70 percent PVDF resin by weight in color coat. Prepare, pretreat, and apply coating to exposed metal surfaces to comply with coating and resin manufacturers' written instructions.

3. Color: As selected by Architect from manufacturer’s standard colors.

4. Concealed Finish: Pretreat with manufacturer's standard white or light-colored acrylic or polyester backer finish, consisting of prime coat and wash coat with minimum total dry film thickness of 0.5 mil (0.013 mm).

2.3 UNDERLAYMENT MATERIALS

A. Felt: ASTM D226/D226M, Type II (No. 30), asphalt-saturated organic felt; nonperforated.

B. Self-Adhering, High-Temperature Sheet Underlayment: Minimum 30 mils (0.76 mm) thick, consisting of a slip-resistant polyethylene- or polypropylene-film top surface laminated to a layer of butyl- or SBS-modified asphalt adhesive, with release-paper backing; specifically

designed to withstand high metal temperatures beneath metal roofing. Provide primer in accordance with underlayment manufacturer's written instructions.

1. Manufacturers: Subject to compliance with requirements, provide products by one of the following:

    a. Carlisle WIP Products; a brand of Carlisle Construction Materials.
    b. GCP Applied Technologies Inc.
    c. Henry Company; a Carlisle company.
    d. Owens Corning.

2. Source Limitations: Obtain underlayment from single source from single manufacturer.
3. Low-Temperature Flexibility: ASTM D1970/D1970M; passes after testing at minus 20 deg F (29 deg C) or lower.

2.4 MISCELLANEOUS MATERIALS

A. General: Provide materials and types of fasteners, protective coatings, sealants, and other miscellaneous items as required for complete sheet metal flashing and trim installation and as recommended by manufacturer of primary sheet metal or manufactured item unless otherwise indicated.

B. Fasteners: Wood screws, annular threaded nails, self-tapping screws, self-locking rivets and bolts, and other suitable fasteners designed to withstand design loads and recommended by manufacturer of primary sheet metal or manufactured item.

1. General: Blind fasteners or self-drilling screws, gasketed, with hex-washer head.

    a. Exposed Fasteners: Heads matching color of sheet metal using plastic caps or factory-applied coating. Provide metal-backed EPDM or PVC sealing washers under heads of exposed fasteners bearing on weather side of metal.
    b. Blind Fasteners: High-strength aluminum or stainless-steel rivets suitable for metal being fastened.

2. Fasteners for Stainless-Steel Sheet: Series 300 stainless steel.
3. Fasteners for Zinc-Coated (Galvanized) Steel Sheet: Series 300 stainless steel or hot-dip galvanized steel according to ASTM A 153/A 153M or ASTM F 2329.

C. Sealant Tape: Pressure-sensitive, 100 percent solids, polyisobutylene compound sealant tape with release-paper backing. Provide permanently elastic, nonsag, nontoxic, nonstaining tape 1/2 inch (13 mm) wide and 1/8 inch (3 mm) thick.

D. Elastomeric Sealant: ASTM C 920, elastomeric silicone polymer sealant; of type, grade, class, and use classifications required to seal joints in sheet metal flashing and trim and remain watertight.

E. Butyl Sealant: ASTM C 1311, single-component, solvent-release butyl rubber sealant; polyisobutylene plasticized; heavy bodied for hooked-type expansion joints with limited movement.

F. Bituminous Coating: Cold-applied asphalt emulsion according to ASTM D 1187.

G. Asphalt Roofing Cement: ASTM D 4586, asbestos free, of consistency required for application.

2.5 FABRICATION, GENERAL

A. General: Custom fabricate sheet metal flashing and trim to comply with details shown and recommendations in cited sheet metal standard that apply to design, dimensions, geometry, metal thickness, and other characteristics of item required. Fabricate sheet metal flashing and trim in shop to greatest extent possible.

1. Fabricate sheet metal flashing and trim in thickness or weight needed to comply with performance requirements, but not less than that specified for each application and metal.
2. Obtain field measurements for accurate fit before shop fabrication.
3. Form sheet metal flashing and trim to fit substrates without excessive oil canning, buckling, and tool marks; true to line, levels, and slopes; and with exposed edges folded back to form hems.
4. Conceal fasteners and expansion provisions where possible. Do not use exposed fasteners on faces exposed to view.

B. Fabrication Tolerances: Fabricate sheet metal flashing and trim that is capable of installation to a tolerance of 1/4 inch in 20 feet (6 mm in 6 m) on slope and location lines indicated on Drawings and within 1/8-inch (3-mm) offset of adjoining faces and of alignment of matching profiles.

C. Expansion Provisions: Form metal for thermal expansion of exposed flashing and trim.

1. Form expansion joints of intermeshing hooked flanges, not less than 1 inch (25 mm) deep, filled with butyl sealant concealed within joints.
2. Use lapped expansion joints only where indicated on Drawings.

D. Sealant Joints: Where movable, nonexpansion-type joints are required, form metal to provide for proper installation of elastomeric sealant according to cited sheet metal standard.

E. Fabricate cleats and attachment devices from same material as accessory being anchored or from compatible, noncorrosive metal.

F. Fabricate cleats and attachment devices of sizes as recommended by cited sheet metal standard and by FM Global Property Loss Prevention Data Sheet 1-49 for application, but not less than thickness of metal being secured.

G. Seams: Fabricate nonmoving seams with flat-lock seams. Form seams and seal with elastomeric sealant unless otherwise recommended by sealant manufacturer for intended use.

H. Do not use graphite pencils to mark metal surfaces.

2.6 LOW-SLOPE ROOF SHEET METAL FABRICATIONS

A. Copings: Fabricate in minimum 96-inch- (2400-mm-) long, but not exceeding 12-foot- (3.6-m-) long, sections. Fabricate joint plates of same thickness as copings. Furnish with continuous cleats to support edge of external leg and on interior leg. Miter corners, fasten and seal watertight. Shop fabricate interior and exterior corners.

1. Coping Profile: Match existing, Fig. 3-4A.
2. Joint Style: Butted with expansion space and 6-inch- (150-mm-) wide, concealed backup plate.
3. Fabricate from the Following Materials:
   a. Galvanized Steel: minimum 22 gauge thick.

B. Roof Edge Flashing (Gravel Stop): Fabricate in minimum 96-inch- (2400-mm-) long, but not exceeding 12-foot- (3.6-m-) long sections. Furnish with 6-inch- (150-mm-) wide, joint cover plates. Shop fabricate interior and exterior corners.

1. Joint Style: Butted with expansion space and 6-inch- (150-mm-) wide, concealed backup plate.
2. Fabricate from the following materials:
   a. Galvanized Steel: minimum 22 gauge thick.

C. Base Flashing: Shop fabricate interior and exterior corners. Fabricate from the following materials:
1. Galvanized Steel: 22 gauge thick.

D. Counterflashing: Fabricate from the following materials:
1. Galvanized Steel: 22 gauge thick.

2.7 ROOF-DRAINAGE SHEET METAL FABRICATIONS

A. Hanging Gutters:

1. Fabricate to cross section required, complete with end pieces, outlet tubes, and other accessories as required.
2. Fabricate in minimum 96-inch- (2400-mm-) long sections.
3. Furnish flat-stock gutter brackets and flat-stock gutter spacers and straps fabricated from same metal as gutters, of size recommended by cited sheet metal standard, but with thickness not less than twice the gutter thickness.
4. Gutter Profile: Style A in accordance with cited sheet metal standard.
5. Expansion Joints: Lap type.
6. Gutters with Girth up to 15 Inches (380 mm): Fabricate from the following materials:

   a. Aluminum: 0.032 inch (0.81 mm) thick.

7. Gutters with Girth 16 to 20 Inches (410 to 510 mm): Fabricate from the following materials:

   a. Aluminum: 0.040 inch (1.02 mm) thick.

8. Gutters with Girth 21 to 25 Inches (530 to 640 mm): Fabricate from the following materials:

    a. Aluminum: 0.050 inch (1.27 mm) thick.

9. Gutters with Girth 26 to 30 Inches (660 to 760 mm): Fabricate from the following materials:

    a. Aluminum: 0.063 inch (1.60 mm) thick.

B. Downspouts: Fabricate rectangular downspouts to dimensions indicated on Drawings, complete with mitered elbows. Furnish with metal hangers from same material as downspouts and anchors.

1. Fabricated Hanger Style: Fig. 1-35A in accordance with SMACNA's "Architectural Sheet Metal Manual."
2. Fabricate from the following materials:

    a. Aluminum: 0.024 inch (0.61 mm) thick.

PART 3 - EXECUTION

3.1 EXAMINATION

A. Examine substrates, areas, and conditions, with Installer present, for compliance with requirements for installation tolerances, substrate, and other conditions affecting performance of the Work.

1. Verify compliance with requirements for installation tolerances of substrates.
2. Verify that substrate is sound, dry, smooth, clean, sloped for drainage, and securely anchored.
3. Verify that air- or water-resistant barriers have been installed over sheathing or backing substrate to prevent air infiltration or water penetration.

B. Proceed with installation only after unsatisfactory conditions have been corrected.

3.2 INSTALLATION, GENERAL

A. General: Anchor sheet metal flashing and trim and other components of the Work securely in place, with provisions for thermal and structural movement. Use fasteners, protective coatings, separators, sealants, and other miscellaneous items as required to complete sheet metal flashing and trim system.

1. Install sheet metal flashing and trim true to line, levels, and slopes. Provide uniform, neat seams with minimum exposure of solder, welds, and sealant.

2. Install sheet metal flashing and trim to fit substrates and to result in watertight performance. Verify shapes and dimensions of surfaces to be covered before fabricating sheet metal.
3. Anchor sheet metal flashing and trim and other components of the Work securely in place, with provisions for thermal and structural movement.
4. Space cleats not more than 12 inches (300 mm) apart. Attach each cleat with at least two fasteners. Bend tabs over fasteners.
5. Install continuous cleats with fasteners spaced not more than 12 inches (300 mm) o.c.
6. Install exposed sheet metal flashing and trim with limited oil canning, and free of buckling and tool marks.
7. Torch cutting of sheet metal flashing and trim is not permitted.
8. Do not use graphite pencils to mark metal surfaces.
9. No visible fasteners on exterior side of the coping or scuppers.

B. Metal Protection: Where dissimilar metals contact each other, or where metal contacts pressure-treated wood or other corrosive substrates, protect against galvanic action or corrosion by painting contact surfaces with bituminous coating or by other permanent separation as recommended by sheet metal manufacturer or cited sheet metal standard.

1. Coat concealed side of uncoated-aluminum and stainless-steel sheet metal flashing and trim with bituminous coating where flashing and trim contact wood, ferrous metal, or cementitious construction.
2. Underlayment: Where installing sheet metal flashing and trim directly on cementitious or wood substrates, install underlayment and cover with slip sheet.

C. Expansion Provisions: Provide for thermal expansion of exposed flashing and trim. Space movement joints at maximum of 10 feet (3 m) with no joints within 24 inches (600 mm) of corner or intersection.

1. Form expansion joints of intermeshing hooked flanges, not less than 1 inch (25 mm) deep, filled with sealant concealed within joints.
2. Use lapped expansion joints only where indicated on Drawings.

D. Fasteners: Use fastener sizes that penetrate wood blocking or sheathing not less than 1-1/4 inches (32 mm) for nails and not less than 3/4 inch (19 mm) for wood screws.

E. Conceal fasteners and expansion provisions where possible in exposed work and locate to minimize possibility of leakage. Cover and seal fasteners and anchors as required for a tight installation.

F. Seal joints as required for watertight construction.

1. Use sealant-filled joints unless otherwise indicated. Embed hooked flanges of joint members not less than 1 inch (25 mm) into sealant. Form joints to completely conceal sealant. When ambient temperature at time of installation is between 40 and 70 deg F (4 and 21 deg C), set joint members for 50 percent movement each way. Adjust setting proportionately for installation at higher ambient temperatures. Do not install sealant-type joints at temperatures below 40 deg F (4 deg C).
2. Prepare joints and apply sealants to comply with requirements in Section 079200 "Joint Sealants."

3.3 INSTALLATION OF ROOF-DRAINAGE SYSTEM

A. Install sheet metal roof-drainage items to produce complete roof-drainage system in accordance with cited sheet metal standard unless otherwise indicated. Coordinate installation of roof perimeter flashing with installation of roof-drainage system.

B. Hanging Gutters:

1. Join sections with joints sealed with sealant.
2. Provide for thermal expansion.
3. Attach gutters at eave or fascia to firmly anchor them in position.
4. Provide end closures and seal watertight with sealant.
5. Slope to downspouts.
6. Fasten gutter spacers to front and back of gutter.
7. Anchor gutter with gutter brackets spaced not more than 24 inches (600 mm) apart to roof deck unless otherwise indicated, and loosely lock to front gutter bead.

C. Built-in Gutters:

1. Join sections with joints sealed with sealant.
2. Provide for thermal expansion.
3. Slope to downspouts.
4. Provide end closures and seal watertight with sealant.
5. Install underlayment layer in built-in gutter trough and extend to drip edge at eaves and under underlayment on roof sheathing.

    a. Lap sides minimum of 2 inches (50 mm) over underlying course.
    b. Lap ends minimum of 4 inches (100 mm).
    c. Stagger end laps between succeeding courses at least 72 inches (1830 mm).
    d. Fasten with roofing nails.
    e. Install slip sheet over underlayment.
6. Anchor back of gutter that extends onto roof deck with cleats spaced not more than 18 inches (460 mm) apart.
7. Install gutter with expansion joints at locations indicated on Drawings, but not exceeding, 50 feet (15.2 m) apart. Install expansion-joint caps.

D. Downspouts:

1. Join sections with 1-1/2-inch (38-mm) telescoping joints.
2. Provide hangers with fasteners designed to hold downspouts securely to walls.
3. Locate hangers at top and bottom and at approximately 60 inches (1500 mm) o.c.
4. Provide elbows at base of downspout to direct water away from building.
5. Connect downspouts to underground drainage system.

E. Expansion-Joint Covers: Install expansion-joint covers at locations and of configuration indicated on Drawings. Lap joints minimum of 4 inches (100 mm) in direction of water flow.

3.4 ROOF FLASHING INSTALLATION

A. General: Install sheet metal flashing and trim to comply with performance requirements, sheet metal manufacturer's written installation instructions, and cited sheet metal standard. Provide concealed fasteners where possible, and set units true to line, levels, and slopes. Install work with laps, joints, and seams that are permanently watertight and weather resistant.

B. Roof Edge Flashing:

1. Install roof edge flashings in accordance with ANSI/SPRI/FM 4435/ES-1.
2. Anchor to resist uplift and outward forces in accordance with recommendations in FM Global Property Loss Prevention Data Sheet 1-49 for FM Approvals' listing for required windstorm classification.

C. Copings:

1. Install roof edge flashings in accordance with ANSI/SPRI/FM 4435/ES-1.

2. Anchor to resist uplift and outward forces in accordance with recommendations in FM Global Property Loss Prevention Data Sheet 1-49 for specified FM Approvals' listing for required windstorm classification.

D. Counterflashing: Coordinate installation of counterflashing with installation of base flashing. Insert counterflashing in reglets or receivers and fit tightly to base flashing. Extend counterflashing 4 inches (100 mm) over base flashing. Lap counterflashing joints minimum of 4 inches (100 mm). Secure in waterproof manner by means of snap-in installation and sealant or lead wedges and sealant unless otherwise indicated.

3.5 ERECTION TOLERANCES

A. Installation Tolerances: Shim and align sheet metal flashing and trim within installed tolerance of 1/4 inch in 20 feet (6 mm in 6 m) on slope and location lines indicated on Drawings and within 1/8-inch (3-mm) offset of adjoining faces and of alignment of matching profiles.

3.6 CLEANING AND PROTECTION

A. Clean exposed metal surfaces of substances that interfere with uniform oxidation and weathering.

B. Clean off excess sealants.

C. Remove temporary protective coverings and strippable films as sheet metal flashing and trim are installed unless otherwise indicated in manufacturer's written installation instructions. On completion of sheet metal flashing and trim installation, remove unused materials and clean finished surfaces as recommended by sheet metal flashing and trim manufacturer. Maintain sheet metal flashing and trim in clean condition during construction.

END OF SECTION 076200

SECTION 07 71 00 – ROOF SPECIALTIES

PART 1 - GENERAL

1.1 RELATED DOCUMENTS

A. Drawings and general provisions of the Contract, including General and Supplementary Conditions and Division 01 Specification Sections, apply to this Section.

1.2 SUMMARY

A. Section Includes:
   1. Manufactured roof specialties, including copings and roof edge flashings, including reglets.
   2. Pipe Penetration Curbs and Covers.
   3. Rooftop support devices for pipes, conduits and ducts.

B. Related Requirements:
   1. Pertinent Sections specifying Volatile Organic Compound (VOC) Content Restrictions.
   2. Pertinent Sections specifying Roofing and roof substrates.
   3. Section 076200 – Sheet Metal Flashing and Trim

1.3 REFERENCE STANDARDS

A. AAMA 2605 - Voluntary Specification, Performance Requirements and Test Procedures for Superior Performing Organic Coatings on Aluminum Extrusions and Panels.

B. California Code of Regulations, Title 24, Part 11 California Green Building Standards Code, “CAL-Green”.

C. California Code of Regulations, Title 24, Part 2, California Building Code (CBC), International Building Code, with California Amendments.

D. NRCA ML104 - The NRCA Roofing and Waterproofing Manual; National Roofing Contractors Association.

E. SMACNA (ASMM) - Architectural Sheet Metal Manual; Sheet Metal and Air Conditioning Contractors' National Association.

F. SPRI ES-1 - Wind Design Standard for Edge Systems Used with Low Slope Roofing Systems; Single Ply Roofing Industry; 2011. (ANSI/SPRI/FM 4435/ES-1)

1.4 SUBMITTALS

A. See Section 01 3300 - Submittals, for submittal procedures.

B. Provide complete submittals at the same time as submittals for work in related sections to permit review of complete and integrated systems and assemblies.

C. Product Data: For each type of product indicated. Include construction details, material descriptions, dimensions of individual components and profiles, and finishes, demonstrate compliance with specified attributes. Provide data on shape of components, materials and finishes, anchor types and locations.

D. CAL-GREEN Submittals: Product Data – VOC Limits: For adhesives sealants, fillers, primers and coatings, documentation including printed statement of VOC contents, comply with limits specified in related section.

E. Shop Drawings: Indicate configuration and dimension of components, adjacent construction, required clearances and tolerances, and other affected work. Include isometric details of corner and transition condition.
   1. Coping Layout Drawings: Dimension coping in maximum lengths recommended by manufacturer. Indicate butt joints or splices evenly spaced for each run of parapet wall. Balance joints and spaces visually in each run. Dimension equal legs on mitered corner pieces (interior and exterior corners). Request Architect approval of layout in writing on shop drawing.

F. Samples: Submit two sample, 12 inch in length, illustrating component shape, finish, and color. Submit samples of factory fabricated transitions and intersections.

G. Manufacturer's Installation Instructions: Indicate special procedures, fasteners, supporting members, and perimeter conditions requiring special attention.

H. Warranty: Special warranty specified in this Section.

I. Informational Submittals:
   1. Delegated-Design Submittal: For copings and roof edge flashings indicated to comply with performance requirements and design criteria, including analysis data signed and sealed by the qualified professional engineer responsible for their preparation.
   2. Professional Engineer Qualifications: Demonstrate compliance with specified requirements.

1.5 QUALITY ASSURANCE

A. Professional Engineer Qualifications: A professional engineer who is legally qualified to practice in jurisdiction where Project is located and who is experienced in providing engineering services of the kind indicated. Engineering services are defined as those performed for installations of roof specialties that are similar to those indicated for this Project in material, design, and extent.

B. Product Options: Information on Drawings and in Specifications establishes requirements for system's aesthetic effects and performance characteristics. Aesthetic effects are indicated by dimensions, arrangements, alignment, and profiles of components and assemblies as they relate to sightlines, to one another, and to adjoining construction. Performance characteristics are indicated by criteria subject to verification by one or more methods including preconstruction testing, field testing, and in-service performance.

1. Do not modify intended aesthetic effects, as judged solely by Architect, except with Architect's approval. If modifications are proposed, submit comprehensive explanatory data to Architect for review.

C. Perform work in accordance with SMACNA (ASMM) details.

D. Installer Qualifications: Company specializing in performing the work of this section on projects of similar size and scope and approved by manufacturer.

1.6 COORDINATION

A. Coordinate installation of manufactured roof specialties with interfacing and adjoining construction to provide a leakproof, secure, and noncorrosive installation.

1.7 WARRANTY

A. Special Warranty on Painted Finishes: Manufacturer's standard form in which manufacturer agrees to repair finish or replace manufactured roof specialties that show evidence of deterioration of factory-applied finishes within specified warranty period.
   1. Fluoropolymer Finish: Deterioration includes, but is not limited to, the following:
      a. Color fading more than 5 Hunter units when tested according to ASTM D 2244.
      b. Chalking in excess of a No. 8 rating when tested according to ASTM D 4214.
      c. Cracking, checking, peeling, or failure of paint to adhere to bare metal.
   2. Verify available warranties for finishes and insert number below. 20-year period is usually available for fluoropolymer finish and is maximum included with manufacturers' published data.
   3. Finish Warranty Period: 20 years from date of Substantial Completion.PRODUCTS

PART 2 - PRODUCTS

2.1 PERFORMANCE REQUIREMENTS

A. VOC Limits for adhesives sealants, fillers, primers and coatings. Comply with limits specified in related section.

B. General: Manufacture and install manufactured roof specialties to resist thermally induced movement and exposure to weather without failing, rattling, leaking, or fastener disengagement.

C. Delegated Design: Design copings and roof edge flashings, including comprehensive engineering analysis by a qualified professional engineer, using performance requirements and design criteria indicated.

D. Edge Securement: Comply with CBC 1504.5 “Edge Securement for Low-Slope Roofs”. Provide products tested for wind resistance in accordance with ANSI/SPRI ES-1, as required by the California Building Code, Chapter 15.

E. Thermal Movements: Provide manufactured roof specialties that allow for thermal movements resulting from the following maximum change (range) in ambient and surface temperatures by preventing buckling, opening of joints, hole elongation, overstressing of components, failure of joint sealants, failure of connections, and other detrimental effects. Provide clips that resist rotation and avoid shear stress as a result of thermal movements. Base engineering calculation on surface temperatures of materials due to both solar heat gain and nighttime-sky heat loss.
   1. Temperature Change (Range): 120 deg F (67 deg C), ambient; 180 deg F (100 deg C), material surfaces.

F. Water Infiltration: Provide manufactured roof specialties that do not allow water infiltration to building interior.

G. NO WOOD SLEEPERS will be allowed. Pipe supports in this Section shall be used where ever wood blocking/sleepers are indicated or where piping supports are required by code.

2.2 COMPONENTS

A. Copings: Factory fabricated to sizes required; mitered, welded corners; concealed fasteners.
   1. Configuration: Concealed continuous hold down cleat at both legs; internal splice piece at joints of same material, thickness and finish as cap; concealed stainless steel fasteners.
   2. Mitered, welded corners to have equal dimension legs of manufacturer's minimum recommended length.
   3. Pull-Off Resistance: Tested in accordance with ANSI/SPRI/FM 4435/ES-1 RE-3 to positive and negative design wind pressure as defined by applicable code.
   4. Snap-on Coping Anchor Plates: Concealed, stainless steel sheet, 12 inches (300 mm) wide, 0.028 inch (0.7 mm) thick, with integral cleats.
   5. Face Leg Cleats: Concealed, continuous stainless steel sheet.
   6. Internal Splice Plate with preformed channel, acting as a gutter chair to direct internal drainage to the exterior. Gauge and profile as recommended by manufacturer to suit conditions and loads indicated, stainless steel.
   7. Material: Formed aluminum sheet, 0.050 inch thick, minimum.
   8. Finish: Three coat 70 percent polyvinylidene fluoride.
   9. Color: To be selected by Architect from manufacturer's standard range.
   10. Products:
      a. R-mer Edge by The Garland Company.
      b. Or equal

B. Counterflashings and Reglets:
   1. Counterflashings: Manufactured units in lengths not exceeding 12 feet (3.6 m) designed to snap into reglets and compress against base flashings with joints lapped, from the following exposed metal in thickness indicated:
      a. Stainless Steel: 0.025 inch (0.64 mm) thick, No. 4 (bright, polished directional satin).

   2. Reglets: Units of type, material, and profile indicated, formed to provide secure interlocking of separate reglet and counterflashing pieces and compatible with flashing indicated with factory-mitered and -welded corners and junctions. Manufactured units formed to provide secure interlocking of separate reglet and counterflashing pieces, and compatible with flashings indicated, from the following exposed metal in thickness indicated:

a. Stainless Steel: 0.025 inch (0.64 mm) thick, No. 4 (bright, polished directional satin).
b. For stucco application, with upturned fastening flange and extension leg of length to match thickness of applied finish materials.
c. For concrete application with temporary closure tape to keep reglet free of concrete materials, special fasteners for attaching reglet to concrete forms, and guides to ensure alignment of reglet section ends.

3. Accessories:
   a. Flexible-Flashing Retainer: Provide resilient plastic or rubber accessory to secure flexible flashing in reglet where clearance does not permit use of standard metal counterflashing or where Drawings show reglet without metal counterflashing.
   b. Counterflashing Wind-Restraint Clips: Provide clips to be installed before counterflashing to prevent wind uplift of counterflashing lower edge.
4. Products:
   a. The Garland Company
   b. Viking Product Group
   c. or equal

C. Pipe Penetration Curbs: Pipe Penetration Curbs and Covers, locate at grouped pipe penetrations serving mechanical unit locations. Size as recommended by manufacturer to accommodate piping indicated and to minimize number of curb penetrations required. Field located to avoid conflicts with other systems.
1. Finish: Field Painted.
2. Insulated Curb for Non-Insulated Roof Decks: Fully mitered 3 inch cant, welded 18 gauge galvanized steel shell and base plate, 1-1/2 inch thick 3-pound density rigid insulation, factory installed 2 x 2 wood nailer, reinforcing on sides 36 inches and greater.
   a. ThyCurb Model TC-2.
   b. Or equal
3. Graduated Pipe Boot Cover: ABS thermoplastic korad acrylic cover, graduated boots molded of weather-resistant Plastisol and (2) stainless steel pipe clamps per boot.
   a. ThyCurb Model TCC-5.
   b. Or equal
4. Manufacturer:
   a. Thybar Corp/ThyCurb:. www.thybar.com.
   b. Or equal
   c. Substitutions: See Section 01 6100 - Product Requirements.

D. Non-Penetrating Rooftop Assemblies: Manufacturer-engineered and factory-fabricated, with pedestal bases that rest on top of roofing membrane, not requiring any attachment to the roof structure and not penetrating the roofing assembly.
1. Design Loadings and Configurations: As required by applicable codes.
2. Support Spacing and Base Sizes: As required to distribute load sufficiently to prevent indentation of roofing assembly.
3. Steel Components: Stainless steel, or carbon steel hot-dip galvanized after fabrication in accordance with ASTM A123/A123M.
4. Resilient Components: Molded 100 percent recycled rubber or HDPE plastic.
5. Hardware, Bolts, Nuts, and Washers: Stainless steel, or carbon steel hot-dip galvanized after fabrication in accordance with ASTM A153/A153M.
6. Rollers: Non-Binding Heavy Duty Plastic.

E. Pipe Supports: Provide resilient base pipe curb attachment fixtures complying with MSS SP-58 and as indicated. If no supports are shown, provide types necessary to support items indicated, in compliance with referenced standard, to suit conditions shown.
   1. Attachment/Support Fixtures: As recommended by manufacturer, same type as indicated for equivalent indoor hangers and supports; corrosion resistant material.
   2. Provide vibration isolation and cushioning with minimum shock transmission to the substrate, allowing free movement, free of pipe tension or binding.

2.3 ACCESSORIES

A. Fasteners, separators, sealants, and other miscellaneous items as recommended by required to complete manufactured roof specialty systems.

B. Sealants: UV stable Polurethan caulking Tuff-Stuff MS.

C. Roof Cement and related materials as required for installation with products specified in related sections.

2.4 FINISHES

A. PVDF (Polyvinylidene Fluoride) Coating: Superior Performance Organic Finish, AAMA 2605; multiple coat, thermally cured fluoropolymer finish system; color as scheduled.

PART 3 - EXECUTION

3.1 EXAMINATION

A. Verify that deck, curbs, roof membrane, base flashing, and other items affecting work of this Section are in place and positioned correctly.

3.2 INSTALLATION

A. Anchor manufactured roof specialties securely in place and capable of resisting forces specified in performance requirements. Use fasteners, separators, sealants, and other miscellaneous items as required to complete manufactured roof specialty systems.
   1. Install manufactured roof specialties with provisions for thermal and structural movement.
   2. Torch cutting of manufactured roof specialties is not permitted.

B. Install components in accordance with manufacturer's instructions.

C. Conform to SMACNA Architectural Sheet Metal Manual (ASMM) drawing details as noted:

D. Metal Protection: Where dissimilar metals will contact each other or corrosive substrates, protect against galvanic action by painting contact surfaces with bituminous coating or by other permanent separation as recommended by manufacturer.

1. Coat concealed side of manufactured roof specialties with bituminous coating where in contact with wood, ferrous metal, or cementitious construction.
2. Underlayment: Where installing exposed-to-view components of manufactured roof specialties directly on cementitious or wood substrates, install a course of felt underlayment and cover with a slip sheet, or install a course of polyethylene underlayment.

E. Coordinate installation of components of this section with installation of roofing membrane and base flashings.

F. Coordinate installation of sealants and roofing cement with work of this section to ensure water tightness.

G. Install manufactured roof specialties level, plumb, true to line and elevation, and without warping, jogs in alignment, excessive oil-canning, buckling, or tool marks.

H. Install manufactured roof specialties to fit substrates and to result in watertight performance. Verify shapes and dimensions of surfaces to be covered before manufacture.

I. Coordinate installation of flashing flanges into reglets.

J. Align work plumb and level, flush with adjacent surfaces.

K. Rigidly anchor to substrate to prevent misalignment.

3.3 COPING INSTALLATION

A. Layout: Provide coping in maximum lengths recommended by manufacturer. Space butt joints or splices evenly for each run of parapet wall. Balance joints and spaces visually in each run.

B. Install cleats, anchor plates, and other anchoring and attachment accessories and devices with concealed fasteners.

C. Coordinate with roof membrane and exterior cladding air barrier installation to ensure continuity and membrane seal across top of parapet wall.

D. Anchor copings to resist uplift and outward forces according to performance requirements.
1. Interlock face and back leg drip edges of snap-on coping cap into cleated anchor plates anchored to substrate at manufacturer's recommended spacing.

3.4 COUNTERFLASHING AND REGLET INSTALLATION

A. Counterflashings: Coordinate installation of counterflashings with installation of base flashings. Insert counterflashings in reglets or receivers and fit tightly to base flashings. Extend counterflashings 4 inches over base flashings. Lap counterflashing joints a minimum of 4 inches and bed with elastomeric sealant.

3.5 PIPE SUPPORTS

A. Provide support for pipe routing as laid out in field.

B. Set bases and support framing in locations specified or as required by site conditions but not to exceed 7’-0” spacing. Apply slip sheet or pad required by roofing manufacturer.

C. Adjust all frame structures to required height and weight, assemble framing, supports, and hangers to configuration indicated.

D. Adjust each required hanger, roller or clamp to its desired height, check each support for equal weight dispersal.

3.6 CLEANING AND PROTECTION

A. Remove temporary protective coverings and strippable films as manufactured roof specialties are installed. On completion of installation, clean finished surfaces, including removing unused fasteners, metal filings, pop rivet stems, and pieces of flashing. Maintain in a clean condition during construction.

B. Replace manufactured roof specialties that have been damaged or that cannot be successfully repaired by finish touchup or similar minor repair procedures.

C. Clean installed work to like-new condition.

D. Clean project premisis of all debris and project realted materials.

E. Ensure that the drains function properly prior to beginning the project. Notify the owner of any issues prior to beginning work.

F. Properly protect all drains from any debris entering the drain durning the project. At the end of the project ensure the drains a still functioning properly.

END OF SECTION 07 71 00

SECTION 077200 - ROOF ACCESSORIES

PART 1 - GENERAL

1.1 RELATED DOCUMENTS

A. Drawings and general provisions of the Contract, including General and Supplementary Conditions and Division 01 Specification Sections, apply to this Section.

1.2 SUMMARY

A. Section Includes:

1. Roof curbs.
2. Equipment supports.
3. Pipe supports.
4. Roof walkways.
5. Preformed flashing sleeves.

B. Related Sections:

1. Division 05 Section "Metal Fabrications" for metal vertical ladders, ships' ladders, and stairs for access to roof hatches.
2. Division 05 Section "Pipe and Tube Railings" for safety railing systems not attached to roof-hatch curbs.
3. Division 07 low-slope roofing Sections for roofing accessories.
4. Division 07 Section "Sheet Metal Flashing and Trim" for shop- and field-formed metal flashing, roof-drainage systems, roof expansion-joint covers, and miscellaneous sheet metal trim and accessories.

1.3 PERFORMANCE REQUIREMENTS

A. General Performance: Roof accessories shall withstand exposure to weather and resist thermally induced movement without failure, rattling, leaking, or fastener disengagement due to defective manufacture, fabrication, installation, or other defects in construction.

1.4 SUBMITTALS

A. Product Data: For each type of roof accessory indicated. Include construction details, material descriptions, dimensions of individual components and profiles, and finishes.

B. Shop Drawings: For roof accessories. Include plans, elevations, keyed details, and attachments to other work. Indicate dimensions, loadings, and special conditions. Distinguish between plant- and field-assembled work.

C. Samples: For each exposed product and for each color and texture specified, prepared on Samples of size to adequately show color.

D. Coordination Drawings: Roof plans, drawn to scale, and coordinating penetrations and roof-mounted items. Show the following:

1. Size and location of roof accessories specified in this Section.
2. Method of attaching roof accessories to roof or building structure.
3. Other roof-mounted items including mechanical and electrical equipment, ductwork, piping, and conduit.
4. Required clearances.

E. Operation and Maintenance Data: For roof accessories to include in operation and maintenance manuals.

F. Warranty: Sample of special warranty.

1.5 COORDINATION

A. Coordinate layout and installation of roof accessories with roofing membrane and base flashing and interfacing and adjoining construction to provide a leakproof, weathertight, secure, and noncorrosive installation.

B. Coordinate dimensions with rough-in information or Shop Drawings of equipment to be supported.

1.6 WARRANTY

A. Special Warranty on Painted Finishes: Manufacturer's standard form in which manufacturer agrees to repair finishes or replace roof accessories that show evidence of deterioration of factory-applied finishes within specified warranty period.

1. Fluoropolymer Finish: Deterioration includes, but is not limited to, the following:

a. Color fading more than 5 Hunter units when tested according to ASTM D 2244.
b. Chalking in excess of a No. 8 rating when tested according to ASTM D 4214.
c. Cracking, checking, peeling, or failure of paint to adhere to bare metal.

2. Finish Warranty Period: 10 years from date of Substantial Completion.

PART 2 - PRODUCTS

2.1 METAL MATERIALS

A. Zinc-Coated (Galvanized) Steel Sheet: ASTM A 653/A 653M, G90 coating designation and mill phosphatized for field painting where indicated.

1. Mill-Phosphatized Finish: Manufacturer's standard for field painting.
2. Factory Prime Coating: Where field painting is indicated, apply pretreatment and white or light-colored, factory-applied, baked-on epoxy primer coat, with a minimum dry film thickness of 0.2 mil
3. Exposed Coil-Coated Finish: Prepainted by the coil-coating process to comply with ASTM A 755/A 755M. Prepare, pretreat, and apply coating to exposed metal surfaces to comply with coating and resin manufacturers' written instructions.

    a. Two-Coat Fluoropolymer Finish: AAMA 621. System consisting of primer and fluoropolymer color topcoat containing not less than 70 percent PVDF resin by weight.

4. Baked-Enamel or Powder-Coat Finish: Immediately after cleaning and pretreating, apply manufacturer's standard two-coat, baked-on finish consisting of prime coat and thermosetting topcoat, with a minimum dry film thickness of 1 mil for topcoat. Comply with coating manufacturer's written instructions for applying and baking to achieve a minimum dry film thickness of 2 mils.
5. Concealed Finish: Pretreat with manufacturer's standard white or light-colored acrylic or polyester-backer finish consisting of prime coat and wash coat, with a minimum total dry film thickness of 0.5 mil.

B. Steel Shapes: ASTM A 36/A 36M, hot-dip galvanized according to ASTM A 123/A 123M unless otherwise indicated.

C. Steel Tube: ASTM A 500, round tube.

D. Galvanized-Steel Tube: ASTM A 500, round tube, hot-dip galvanized according to ASTM A 123/A 123M.

E. Steel Pipe: ASTM A 53/A 53M, galvanized.

2.2 MISCELLANEOUS MATERIALS

A. General: Provide materials and types of fasteners, protective coatings, sealants, and other miscellaneous items required by manufacturer for a complete installation.

B. Glass-Fiber Board Insulation: ASTM C 726, thickness as indicated.

C. Bituminous Coating: Cold-applied asphalt emulsion complying with ASTM D 1187.

D. Underlayment:

1. Felt: ASTM D 226, Type II (No. 30), asphalt-saturated organic felt, nonperforated.
2. Slip Sheet: Building paper, 3-lb/100 sq. ft. minimum, rosin sized.

E. Fasteners: Roof accessory manufacturer's recommended fasteners suitable for application and metals being fastened. Match finish of exposed fasteners with finish of material being fastened.

Provide nonremovable fastener heads to exterior exposed fasteners. Furnish the following unless otherwise indicated:

1. Fasteners for Zinc-Coated or Aluminum-Zinc Alloy-Coated Steel: Series 300 stainless steel or hot-dip zinc-coated steel according to ASTM A 153/A 153M or ASTM F 2329.
2. Fasteners for Aluminum Sheet: Aluminum or Series 300 stainless steel.
3. Fasteners for Copper Sheet: Copper, hardware bronze, or passivated Series 300 stainless steel.
4. Fasteners for Stainless-Steel Sheet: Series 300 stainless steel.

F. Gaskets: Manufacturer's standard tubular or fingered design of neoprene, EPDM, PVC, or silicone or a flat design of foam rubber, sponge neoprene, or cork.

G. Elastomeric Sealant: ASTM C 920, elastomeric polyurethane polymer sealant as recommended by roof accessory manufacturer for installation indicated; low modulus; of type, grade, class, and use classifications required to seal joints and remain watertight.

H. Butyl Sealant: ASTM C 1311, single-component, solvent-release butyl rubber sealant; polyisobutylene plasticized; heavy bodied for expansion joints with limited movement.

I. Asphalt Roofing Cement: ASTM D 4586, asbestos free, of consistency required for application.

2.3 ROOF CURBS

A. Roof Curbs: Internally reinforced roof-curb units with integral spring-type vibration isolators and capable of supporting superimposed live and dead loads, including equipment loads and other construction indicated on Drawings; with welded or mechanically fastened and sealed corner joints, stepped integral metal cant raised the thickness of roof insulation, and integrally formed deck-mounting flange at perimeter bottom.

1. Manufacturers: Subject to compliance with requirements,

available manufacturers offering products that may be incorporated into the Work include, but are not limited to, the following

a. AES Industries, Inc.
b. Curbs Plus, Inc.
c. Custom Solution Roof and Metal Products.
d. Greenheck Fan Corporation.
e. LM Curbs.
f. Metallic Products Corp.
g. Milcor Inc.; Commercial Products Group of Hart & Cooley, Inc.
h. Pate Company (The).
i. Roof Products, Inc.
j. Safe Air of Illinois.
k. Thybar Corporation.

l. Vent Products Co., Inc.

B. Size: Coordinate dimensions with roughing-in information or Shop Drawings of equipment to be supported.

C. Loads: .

D. Material: Zinc-coated (galvanized steel sheet), 0.052 inch thick.

1. Finish: Factory prime coating.
2. Color: As selected by Architect from manufacturer's full range.

E. Material: Aluminum sheet, 0.090 inch thick.

1. Finish: Factory prime coating.
2. Color: As selected by Architect from manufacturer's full range.

F. Construction:

1. Insulation: Factory insulated with 1-1/2-inch- thick glass-fiber board insulation.
2. Liner: Same material as curb, of manufacturer's standard thickness and finish.
3. Factory-installed wood nailer at top of curb, continuous around curb perimeter.
4. On ribbed or fluted metal roofs, form deck-mounting flange at perimeter bottom to conform to roof profile.
5. Fabricate curbs to minimum height of 12 inches unless otherwise indicated.
6. Top Surface: Level around perimeter with roof slope accommodated by sloping the deck-mounting flange.
7. Sloping Roofs: Where roof slope exceeds 1:48, fabricate curb with perimeter curb height tapered to accommodate roof slope so that top surface of perimeter curb is level. Equip unit with water diverter or cricket on side that obstructs water flow.
8. Security Grille: Provide where indicated.

2.4 EQUIPMENT SUPPORTS

A. Equipment Supports: Internally reinforced metal equipment supports capable of supporting superimposed live and dead loads, including equipment loads and other construction indicated on Drawings; with welded or mechanically fastened and sealed corner joints stepped integral metal cant raised the thickness of roof insulation, and integrally formed deck-mounting flange at perimeter bottom.

1. Manufacturers: Subject to compliance with requirements, available manufacturers offering products that may be incorporated into the Work include, but are not limited to, the following:

a. AES Industries, Inc.
b. Curbs Plus, Inc.
c. Custom Solution Roof and Metal Products.
d. Greenheck Fan Corporation.

e. LM Curbs.
f. Milcor Inc.; Commercial Products Group of Hart & Cooley, Inc.
g. Pate Company (The).
h. Roof Products, Inc.
i. Thybar Corporation.
j. Vent Products Co., Inc.

B. Size: Coordinate dimensions with roughing-in information or Shop Drawings of equipment to be supported.

C. Loads: .

D. Material: Zinc-coated (galvanized steel sheet, 0.079 inch thick.

1. Finish: Factory prime coating.
2. Color: As selected by Architect from manufacturer's full range.

E. Material: Aluminum sheet, 0.090 inch thick.

1. Finish: Factory prime coating .
2. Color: As selected by Architect from manufacturer's full range.

F. Material: Stainless-steel sheet, 0.078 inch thick.

1. Finish: Manufacturer's standard

G. Construction:

1. Insulation: Factory insulated with 1-1/2-inch thick glass-fiber board insulation.
2. Liner: Same material as equipment support, of manufacturer's standard thickness and finish.
3. Metal Counterflashing: Manufacturer's standard, removable, fabricated of same metal and finish as equipment support.
4. On ribbed or fluted metal roofs, form deck-mounting flange at perimeter bottom to conform to roof profile.
5. Fabricate equipment supports to minimum height of 12 inches unless otherwise indicated.
6. Sloping Roofs: Where roof slope exceeds 1:48, fabricate each support with height to accommodate roof slope so that tops of supports are level with each other. Equip supports with water diverters or crickets on sides that obstruct water flow.
7. Security Grille: Provide where indicated.

2.5 ROOF HATCHES

A. Metal roof-hatch units with lids and insulated single-walled curbs, welded or mechanically fastened and sealed corner joints, continuous lid-to-curb counterflashing and weathertight perimeter gasketing, straight sides,and integrally formed deck-mounting flange at perimeter bottom.

B. Type and Size:

1. Single-leaf lid, 36 by 36 inches (900 by 900 mm)

C. Hatch Material, Steel: Zinc-coated (galvanized) steel sheet.

1. Thickness: Manufacturer's standard thickness for hatch size indicated.
2. Finish: Factory prime coating.
3. Color: As selected by Architect from manufacturer's full range.

D. Construction:

1. Insulation: 1-inch- (25-mm-) thick, glass-fiber board.

2. Nailer: Factory-installed wood nailer continuous around hatch perimeter.
3. Fabricate curbs to minimum height of 12 inches (305 mm) above roofing surface unless otherwise indicated.
4. Sloping Roofs: Equip hatch with water diverter or cricket on side that obstructs water flow.

E. Hardware: Spring operators, hold-open arm, galvanized steel spring latch with turn handles, galvanized steel butt- or pintle-type hinge system, and padlock hasps inside and outside.

F. Safety Railing System: Roof-hatch manufacturer's standard system, including rails, clamps, fasteners, safety barrier at railing opening, and accessories required for a complete installation; attached to roof hatch and complying with 29 CFR 1910.23 requirements and authorities having jurisdiction.

1. Height: 42 inches (1060 mm) above finished roof deck.
2. Posts and Rails: Galvanized-steel pipe, 1-1/4 inches (31 mm) in diameter or galvanized-steel tube, 1-5/8 inches (41 mm) in diameter.
3. Flat Bar: Galvanized steel, 2 inches (50 mm) high by 3/8 inch (9 mm) thick.
4. Maximum Opening Size: System constructed to prevent passage of a sphere 21 inches (533 mm) in diameter.
5. Chain Passway Barrier: Galvanized proof coil chain with quick link on fixed end.
6. Self-Latching Gate: Fabricated of same materials and rail spacing as safety railing system. Provide manufacturer's standard hinges and self-latching mechanism.
7. Post and Rail Tops and Ends: Weather resistant, closed or plugged with prefabricated end fittings.
8. Provide weep holes or another means to drain-entrapped water in hollow sections of handrail and railing members.
9. Fabricate joints exposed to weather to be watertight.
10. Fasteners: Manufacturer's standard, finished to match railing system.
11. Finish: Manufacturer's standard.

    a. Color: As selected by Architect from manufacturer's full range.

G. Ladder-Assist Post: Roof-hatch manufacturer's standard device for attachment to roof-access ladder.

1. Operation: Post locks in place on full extension; release mechanism returns post to closed position.
2. Height: 42 inches (1060 mm) above finished roof deck.
3. Material: Steel tube.
4. Post: 1-5/8-inch- (41-mm-) diameter pipe.
5. Finish: Manufacturer's standard.

    a. Color: Manufacturer's standard.

2.6 PIPE SUPPORTS

A. Pipe Supports: Adjustable-height, extruded-aluminum tube, filled with urethane insulation; 2 inches in diameter; with aluminum baseplate, EPDM base seal, manufacturer's recommended hardware for mounting to structure or structural roof deck as indicated, and extruded-aluminum carrier assemblies; suitable for quantity of pipe runs and sizes.

1. Manufacturers: Subject to compliance with requirements, available manufacturers offering products that may be incorporated into the Work include, but are not limited to, the following:

    a. Thaler Metal USA Inc.

2. Pipe Support Height: As indicated on Drawings.
3. Roller Assembly: With stainless-steel roller, sized for supported pipes.
4. Pipe Support Flashing: Manufacturer's standard insulated sleeve flashing with integral base flange; aluminum sheet, 0.063 inch thick.
5. Finish: Manufacturer's standard.

B. Light-Duty Pipe Supports: Extruded-aluminum base assembly and Type 304 stainless-steel roller assembly for pipe sizes indicated, including manufacturer's recommended load-distributing baseplate.

1. Manufacturers: Subject to compliance with requirements, available manufacturers offering products that may be incorporated into the Work include, but are not limited to, the following:

    a. Thaler Metal USA Inc.

2. Finish: Manufacturer's standard.

C. Duct Supports: Extruded-aluminum, urethane-insulated supports, 2 inches in diameter; with manufacturer's recommended hardware for mounting to structure or structural roof deck.

1. Manufacturers: Subject to compliance with requirements, available manufacturers offering products that may be incorporated into the Work include, but are not limited to, the following:

    a. Thaler Metal USA Inc.

2. Finish: Manufacturer's standard.

2.7 ROOF WALKWAYS

A. Roof Walkway: Roofing Manufacturer mastic applied walk pads 36” wide.

2.8 PREFORMED FLASHING SLEEVES

A. Exhaust Vent Flashing: Double-walled metal flashing sleeve or boot, insulation filled, with integral deck flange, 12 inches high, with removable metal hood and perforated metal collar.

1. Manufacturers: Subject to compliance with requirements, available manufacturers offering products that may be incorporated into the Work include, but are not limited to, the following:

   a. Custom Solution Roof and Metal Products.
   b. Thaler Metal USA Inc.

2. Metal: Aluminum sheet, 0.063 inch thick.
3. Diameter: as required for vents..
4. Finish: Manufacturer's standard .

B. Vent Stack Flashing: Metal flashing sleeve, uninsulated, with integral deck flange.

1. Manufacturers: Subject to compliance with requirements, available manufacturers offering products that may be incorporated into the Work include, but are not limited to, the following:

   a. Custom Solution Roof and Metal Products.
   b. Milcor Inc.; Commercial Products Group of Hart & Cooley, Inc.
   c. Thaler Metal USA Inc.

2. Metal: Aluminum sheet, 0.063 inch thick.
3. Height: 13 inches.
4. Diameter: As necessary for vent piping..
5. Finish: Manufacturer's standard.

2.9 GENERAL FINISH REQUIREMENTS

A. Comply with NAAMM's "Metal Finishes Manual for Architectural and Metal Products" for recommendations for applying and designating finishes.

B. Appearance of Finished Work: Noticeable variations in same piece are not acceptable. Variations in appearance of adjoining components are acceptable if they are within the range of approved Samples and are assembled or installed to minimize contrast.

PART 3 - EXECUTION

3.1 EXAMINATION

A. Examine substrates, areas, and conditions, with Installer present, to verify actual locations, dimensions, and other conditions affecting performance of the Work.

B. Verify that substrate is sound, dry, smooth, clean, sloped for drainage, and securely anchored.

C. Verify dimensions of roof openings for roof accessories.

D. Proceed with installation only after unsatisfactory conditions have been corrected.

3.2 INSTALLATION

A. General: Install roof accessories according to manufacturer's written instructions.

1. Install roof accessories level, plumb, true to line and elevation, and without warping, jogs in alignment, excessive oil canning, buckling, or tool marks.
2. Anchor roof accessories securely in place so they are capable of resisting indicated loads.
3. Use fasteners, separators, sealants, and other miscellaneous items as required to complete installation of roof accessories and fit them to substrates.
4. Install roof accessories to resist exposure to weather without failing, rattling, leaking, or loosening of fasteners and seals.

B. Metal Protection: Protect metals against galvanic action by separating dissimilar metals from contact with each other or with corrosive substrates by painting contact surfaces with bituminous coating or by other permanent separation as recommended by manufacturer.

1. Coat concealed side of uncoated aluminum roof accessories with bituminous coating where in contact with wood, ferrous metal, or cementitious construction.
2. Underlayment: Where installing roof accessories directly on cementitious or wood substrates, install a course of felt underlayment and cover with a slip sheet, or install a course of polyethylene sheet.
3. Bed flanges in thick coat of asphalt roofing cement where required by manufacturers of roof accessories for waterproof performance.

C. Roof Curb Installation: Install each roof curb so top surface is level.

D. Equipment Support Installation: Install equipment supports so top surfaces are level with each other.

E. Roof-Hatch Installation:

1. Install roof hatch so top surface of hatch curb is level.
2. Verify that roof hatch operates properly. Clean, lubricate, and adjust operating mechanism and hardware.

3. Attach safety railing system to roof-hatch curb.
4. Attach ladder-assist post according to manufacturer's written instructions.

F. Gravity Ventilator Installation: Verify that gravity ventilators operate properly and have unrestricted airflow. Clean, lubricate, and adjust operating mechanisms.

G. Pipe Support Installation: Install pipe supports so top surfaces are in contact with and provide equally distributed support along length of supported item.

H. Roof Walkway Installation:

1. Verify that locations of access and servicing points for roof-mounted equipment are served by locations of roof walkways.

I. Preformed Flashing-Sleeve Installation: Secure flashing sleeve to roof membrane according to flashing-sleeve manufacturer's written instructions.

J. Seal joints with elastomeric or butyl sealant as required by roof accessory manufacturer.

3.3 REPAIR AND CLEANING

A. Galvanized Surfaces: Clean field welds, bolted connections, and abraded areas and repair galvanizing according to ASTM A 780.

B. Touch up factory-primed surfaces with compatible primer ready for field painting according to Division 09 painting Sections.

C. Clean exposed surfaces according to manufacturer's written instructions.

D. Clean off excess sealants.

E. Replace roof accessories that have been damaged or that cannot be successfully repaired by finish touchup or similar minor repair procedures.

END OF SECTION 077200

SECTION 079200 - JOINT SEALANTS

PART 1 - GENERAL

1.1 RELATED DOCUMENTS

A. Drawings and general provisions of the Contract, including General and Supplementary Conditions and Division 01 Specification Sections, apply to this Section.

1.2 SUMMARY

A. Section Includes:
1. Urethane joint sealants.
2. Silicone joint sealants.
3. Latex joint sealants.
4. Acoustical joint sealants.
5. Mildew resistant silicone joint sealant.

B. Related Sections:
1. Division 07 Section "Expansion Control" for building expansion joints.
2. Division 09 Section "Gypsum Board" for sealing perimeter joints.

1.3 PRECONSTRUCTION TESTING

A. Preconstruction Field-Adhesion Testing: Before installing sealants, field test their adhesion to Project joint substrates as follows:

1. Locate test joints where indicated on Project or, if not indicated, as directed by Architect.
2. Conduct field tests for each application indicated below:

    a. Each kind of sealant and joint substrate indicated.

3. Notify Architect seven days in advance of dates and times when test joints will be erected.
4. Arrange for tests to take place with joint-sealant manufacturer's technical representative present.

    a. Test Method: Test joint sealants according to Method A, Field-Applied Sealant Joint Hand Pull Tab, in Appendix X1 in ASTM C 1193 or Method A, Tail Procedure, in ASTM C 1521.

        1) For joints with dissimilar substrates, verify adhesion to each substrate separately; extend cut along one side, verifying adhesion to opposite side. Repeat procedure for opposite side.

5. Report whether sealant failed to adhere to joint substrates or tore cohesively. Include data on pull distance used to test each kind of product and joint substrate. For sealants that fail adhesively, retest until satisfactory adhesion is obtained.
6. Evaluation of Preconstruction Field-Adhesion-Test Results: Sealants not evidencing adhesive failure from testing, in absence of other indications of noncompliance with requirements, will be considered satisfactory. Do not use sealants that fail to adhere to joint substrates during testing.

1.4 SUBMITTALS

A. Product Data: For each joint-sealant product indicated.

B. Retain first paragraph below if low-emitting materials are required for LEED-NC or LEED-CI Credit EQ 4.1; coordinate with requirements selected in Part 2 for interior sealants and primers.

C. Samples for Initial Selection: Manufacturer's color charts consisting of strips of cured sealants showing the full range of colors available for each product exposed to view.

D. Field Mock-Ups.

1. For each adjacent material or different combination of adjacent materials, provide a maximum of three (3) 24 inch long mock-ups of selected colors for each type of sealant. Mock-ups are to verify colors selected under “initial selection.”
2. Remove mock-up materials in their entirety after review by Architect.

E. Preconstruction Field-Adhesion Test Reports: Indicate which sealants and joint preparation methods resulted in optimum adhesion to joint substrates based on testing specified in "Preconstruction Testing" Article.

1.5 QUALITY ASSURANCE

A. Installer Qualifications: Manufacturer's authorized representative who is trained and approved for installation of units required for this Project.

B. Source Limitations: Obtain each kind of joint sealant from single source from single manufacturer.

C. Mockups: Install sealant in mockups of assemblies specified in other Sections that are indicated to receive joint sealants specified in this Section. Use materials and installation methods specified in this Section.

1.6 PROJECT CONDITIONS

A. Do not proceed with installation of joint sealants under the following conditions:

1. When ambient and substrate temperature conditions are outside limits permitted by joint-sealant manufacturer or are below 40 deg F (5 deg C).
2. When joint substrates are wet.

3. Where joint widths are less than those allowed by joint-sealant manufacturer for applications indicated.
4. Where contaminants capable of interfering with adhesion have not yet been removed from joint substrates.

1.7 WARRANTY

A. Special warranties specified in this article exclude deterioration or failure of joint sealants from the following:

1. Movement of the structure caused by structural settlement or errors attributable to design or construction resulting in stresses on the sealant exceeding sealant manufacturer's written specifications for sealant elongation and compression.
2. Disintegration of joint substrates from natural causes exceeding design specifications.
3. Mechanical damage caused by individuals, tools, or other outside agents.
4. Changes in sealant appearance caused by accumulation of dirt or other atmospheric contaminants.

PART 2 - PRODUCTS

2.1 MATERIALS, GENERAL

A. Compatibility: Provide joint sealants, backings, and other related materials that are compatible with one another and with joint substrates under conditions of service and application, as demonstrated by joint-sealant manufacturer, based on testing and field experience.

B. VOC Content of Interior Sealants: Provide sealants and sealant primers for use inside the weatherproofing system that comply with the following limits for VOC content when calculated according to 40 CFR 59, Part 59, Subpart D (EPA Method 24):

1. Architectural Sealants: 250 g/L.
2. Sealant Primers for Nonporous Substrates: 250 g/L.
3. Sealant Primers for Porous Substrates: 775 g/L.

C. Liquid-Applied Joint Sealants: Comply with ASTM C 920 and other requirements indicated for each liquid-applied joint sealant specified, including those referencing ASTM C 920 classifications for type, grade, class, and uses related to exposure and joint substrates.

1. Suitability for Immersion in Liquids. Where sealants are indicated for Use I for joints that will be continuously immersed in liquids, provide products that have undergone testing according to ASTM C 1247. Liquid used for testing sealants is deionized water, unless otherwise indicated.

D. Stain-Test-Response Characteristics: Where sealants are specified to be nonstaining to porous substrates, provide products that have undergone testing according to ASTM C 1248 and have not stained porous joint substrates indicated for Project.

E. Suitability for Contact with Food: Where sealants are indicated for joints that will come in repeated contact with food, provide products that comply with 21 CFR 177.2600.

F. Colors of Exposed Joint Sealants: As selected by Architect from manufacturer's full range.

2.2 URETHANE JOINT SEALANTS

A. Urethane, S, NS, 25, NT: Single-component, nonsag, nontraffic-use, plus 25 percent and minus 25 percent movement capability, urethane joint sealant; ASTM C920, Type S, Grade NS, Class 25, Use NT.

1. Products: Subject to compliance with requirements, provide one of the following:

a. BASF Corporation; MasterSeal NP 1 (Pre-2014: Sonolastic NP1).
b. Pecora Corporation; Dynatrol I-XL.
c. Sika Corporation; Joint Sealants; Sikaflex 2C-NS.
d. Tremco Incorporated; Dymonic.

2.3 SILICONE JOINT SEALANTS

A. Silicone, S, NS, 50, NT: Single-component, field tintable, nonsag, plus 50 percent and minus 50 percent movement capability, nontraffic-use, neutral-curing silicone joint sealant; ASTM C 920, Type S, Grade NS, Class 50, Use NT.

1. Products: Subject to compliance with requirements, available products that may be incorporated into the Work include, but are not limited to the following:

a. Dow Corning Corporation; Dow Corning® 791 Silicone Weatherproofing Sealant (Provide custom color).
b. GE Construction Sealants; Momentive Performance Materials Inc.; SCS9000 SilPruf NB (Provide custom color).
c. Pecora Corporation; 890FTS (Tintable)
d. Sika Corporation; Joint Sealants; Sikasil WS-295 FPS (Tintable).

2. Contractor can submit a standard color chart from one of the above listed manufacturers to the Architect to determine if there is an acceptable color. If there is not, a sealant type listed in 2.2.A.1 shall be used.

2.4 LATEX JOINT SEALANTS

A. Latex Joint Sealant: Acrylic latex or siliconized acrylic latex, ASTM C 834, Type OP, Grade NF.

1. Products: Subject to compliance with requirements, provide one of the following:

a. BASF Building Systems; Sonolac.
b. May National Associates, Inc.; Bondaflex 600.

c. Pecora Corporation; AC-20+.
d. Sherwin Williams; 950A Siliconized Acrylic Latex.
e. Tremco Incorporated; Tremflex 834.

2.5 MILDEW-RESISTANT JOINT SEALANTS

A. Mildew-Resistant Joint Sealants: Formulated for prolonged exposure to humidity with fungicide to prevent mold and mildew growth.

B. Silicone, Mildew Resistant, Acid Curing, S, NS, 25, NT: Mildew-resistant, single-component, nonsag, plus 25 percent and minus 25 percent movement capability, nontraffic-use, acid-curing silicone joint sealant; ASTM C 920, Type S, Grade NS, Class 25, Use NT.

1. Products: Subject to compliance with requirements, provide one of the following:

a. Dow Corning Corporation; DOW CORNING® 786 SILICONE SEALANT -.
b. GE Construction Sealants; Momentive Performance Materials Inc.; SCS1700 Sanitary.
c. Tremco Incorporated; Tremsil 200.

2.6 ACOUSTICAL JOINT SEALANTS

A. Acoustical Joint Sealant: Manufacturer's standard nonsag, paintable, nonstaining latex sealant complying with ASTM C 834. Product effectively reduces airborne sound transmission through perimeter joints and openings in building construction as demonstrated by testing representative assemblies according to ASTM E 90.

1. Products: Subject to compliance with requirements, provide one of the following:

a. Titebond; “Greenchoice Acoustical Sound Sealant.”
b. Pecora Corporation; AC-20 FTR.
c. Tremco Incorporated; Tremflex 834
d. Hilti; CS-S SA Light Smoke and Acoustic Sealant.
e. DAP; Sound Block.

2.7 JOINT SEALANT BACKING

A. General: Provide sealant backings of material that are nonstaining; are compatible with joint substrates, sealants, primers, and other joint fillers; and are approved for applications indicated by sealant manufacturer based on field experience and laboratory testing.

B. Cylindrical Sealant Backings: ASTM C 1330, Type C (closed-cell material with a surface skin), Type B (bicellular material with a surface skin) or any of the preceding types, as

approved in writing by joint-sealant manufacturer for joint application indicated, and of size and density to control sealant depth and otherwise contribute to producing optimum sealant performance.

C. Bond-Breaker Tape: Polyethylene tape or other plastic tape recommended by sealant manufacturer for preventing sealant from adhering to rigid, inflexible joint-filler materials or joint surfaces at back of joint. Provide self-adhesive tape where applicable.

2.8 MISCELLANEOUS MATERIALS

A. Primer: Material recommended by joint-sealant manufacturer where required for adhesion of sealant to joint substrates indicated, as determined from preconstruction joint-sealant-substrate tests and field tests.

B. Cleaners for Nonporous Surfaces: Chemical cleaners acceptable to manufacturers of sealants and sealant backing materials, free of oily residues or other substances capable of staining or harming joint substrates and adjacent nonporous surfaces in any way, and formulated to promote optimum adhesion of sealants to joint substrates.

C. Masking Tape: Nonstaining, nonabsorbent material compatible with joint sealants and surfaces adjacent to joints.

PART 3 - EXECUTION

3.1 EXAMINATION

A. Examine joints indicated to receive joint sealants, with Installer present, for compliance with requirements for joint configuration, installation tolerances, and other conditions affecting joint-sealant performance.

B. Proceed with installation only after unsatisfactory conditions have been corrected.

3.2 PREPARATION

A. Surface Cleaning of Joints: Clean out joints immediately before installing joint sealants to comply with joint-sealant manufacturer's written instructions and the following requirements:

1. Remove all foreign material from joint substrates that could interfere with adhesion of joint sealant, including dust, paints (except for permanent, protective coatings tested and approved for sealant adhesion and compatibility by sealant manufacturer), old joint sealants, oil, grease, waterproofing, water repellents, water, surface dirt, and frost.
2. Clean porous joint substrate surfaces by brushing, grinding, mechanical abrading, or a combination of these methods to produce a clean, sound substrate capable of developing optimum bond with joint sealants. Remove loose particles remaining after cleaning operations above by vacuuming or blowing out joints with oil-free compressed air. Porous joint substrates include the following:

a. Concrete.
b. Masonry.
c. Unglazed surfaces of ceramic tile.
d. Exterior insulation and finish systems.

3. Remove laitance and form-release agents from concrete.
4. Clean nonporous joint substrate surfaces with chemical cleaners or other means that do not stain, harm substrates, or leave residues capable of interfering with adhesion of joint sealants. Nonporous joint substrates include the following:

a. Metal.
b. Glass.
c. Porcelain enamel.
d. Glazed surfaces of ceramic tile.

B. Joint Priming: Prime joint substrates where recommended by joint-sealant manufacturer or as indicated by preconstruction joint-sealant-substrate tests or prior experience. Apply primer to comply with joint-sealant manufacturer's written instructions. Confine primers to areas of joint-sealant bond; do not allow spillage or migration onto adjoining surfaces.

C. Masking Tape: Use masking tape where required to prevent contact of sealant or primer with adjoining surfaces that otherwise would be permanently stained or damaged by such contact or by cleaning methods required to remove sealant smears. Remove tape immediately after tooling without disturbing joint seal.

3.3 INSTALLATION OF JOINT SEALANTS

A. General: Comply with joint-sealant manufacturer's written installation instructions for products and applications indicated, unless more stringent requirements apply.

B. Sealant Installation Standard: Comply with recommendations in ASTM C 1193 for use of joint sealants as applicable to materials, applications, and conditions indicated.

C. Install sealant backings of kind indicated to support sealants during application and at position required to produce cross-sectional shapes and depths of installed sealants relative to joint widths that allow optimum sealant movement capability.

1. Do not leave gaps between ends of sealant backings.
2. Do not stretch, twist, puncture, or tear sealant backings.
3. Remove absorbent sealant backings that have become wet before sealant application and replace them with dry materials.

D. Install bond-breaker tape behind sealants where sealant backings are not used between sealants and backs of joints.

E. Install sealants using proven techniques that comply with the following and at the same time backings are installed:

1. Place sealants so they directly contact and fully wet joint substrates.

2. Completely fill recesses in each joint configuration.
3. Produce uniform, cross-sectional shapes and depths relative to joint widths that allow optimum sealant movement capability.

F. Tooling of Nonsag Sealants: Immediately after sealant application and before skinning or curing begins, tool sealants according to requirements specified in subparagraphs below to form smooth, uniform beads of configuration indicated; to eliminate air pockets; and to ensure contact and adhesion of sealant with sides of joint.

1. Remove excess sealant from surfaces adjacent to joints.
2. Use tooling agents that are approved in writing by sealant manufacturer and that do not discolor sealants or adjacent surfaces.
3. Provide concave joint profile per Figure 8A in ASTM C 1193, unless otherwise indicated.
4. Provide flush joint profile where indicated per Figure 8B in ASTM C 1193.
5. Provide recessed joint configuration of recess depth and at locations indicated per Figure 8C in ASTM C 1193.

a. Use masking tape to protect surfaces adjacent to recessed tooled joints.

G. Acoustical Sealant Installation: At metal stud partitions that have acoustical insulation, sound-rated assemblies, tops of non-fire rated CMU walls, and elsewhere as indicated, seal construction at perimeters, behind control joints, and at openings and penetrations with a continuous bead of acoustical sealant. Install acoustical sealant at both faces of partitions at perimeters and through penetrations. Comply with ASTM C 919 and with manufacturer's written recommendations.

3.4 FIELD QUALITY CONTROL

A. Evaluation of Field-Adhesion Test Results: Sealants not evidencing adhesive failure from testing or noncompliance with other indicated requirements will be considered satisfactory. Remove sealants that fail to adhere to joint substrates during testing or to comply with other requirements. Retest failed applications until test results prove sealants comply with indicated requirements.

3.5 CLEANING

A. Clean off excess sealant or sealant smears adjacent to joints as the Work progresses by methods and with cleaning materials approved in writing by manufacturers of joint sealants and of products in which joints occur.

3.6 PROTECTION

A. Protect joint sealants during and after curing period from contact with contaminating substances and from damage resulting from construction operations or other causes so sealants are without deterioration or damage at time of Substantial Completion. If, despite such protection, damage or deterioration occurs, cut out and remove damaged or deteriorated joint sealants immediately so installations with repaired areas are indistinguishable from original work.

3.7 JOINT-SEALANT SCHEDULE

A. Joint-Sealant Application: Exterior joints in horizontal traffic surfaces.

1. Joint Locations:

   a. Isolation and contraction joints in cast-in-place concrete slabs.

2. Urethane Joint Sealant: Multicomponent, nonsag, traffic grade, Class 50.
3. Joint-Sealant Color: As selected by Architect from manufacturer's full range of colors.

B. Joint-Sealant Application: Exterior joints in vertical surfaces and horizontal nontraffic surfaces.

1. Joint Locations:

   a. Construction joints in cast-in-place concrete.
   b. Control and expansion joints in unit masonry.
   c. Joints in glass unit masonry assemblies.
   d. Joints between metal panels.
   e. Joints between different materials listed above.
   f. Perimeter joints between materials listed above and frames of doors, windows, storefront, and curtainwall construction.
   g. Control and expansion joints in ceilings and other overhead surfaces.
2. Silicone Joint Sealant: Multicomponent, nonsag, Class 50.
3. Joint-Sealant Color: As selected by Architect from manufacturer's full range of colors.

C. Joint-Sealant Application: Interior joints in vertical surfaces and horizontal nontraffic surfaces.

1. Joint Locations:

   a. Control and expansion joints on exposed interior surfaces of exterior walls (not precast panels) - Latex. On exposed CMU use: Urethane.
   b. Tile control and expansion joints - Latex
   c. Vertical joints on exposed surfaces of walls and partitions - Latex
   d. Perimeter joints between interior wall surfaces and frames of interior doors, windows, and elevator entrances - Latex.
   e. Perimeter joints on interior storefront and curtainwall – Silicone.

2. Joint Sealant: As noted above.
3. Joint-Sealant Color: As selected by Architect from manufacturer's full range of colors.

D. Joint-Sealant Application: Mildew-resistant interior joints in vertical surfaces and horizontal nontraffic surfaces.

1. Joint Sealant Location:

    a. Joints between plumbing fixtures and adjoining walls, floors, and counters.
    b. Tile control and expansion joints where indicated.

2. Joint Sealant: Mildew resistant, single component, nonsag, neutral curing, Silicone.
3. Joint-Sealant Color: As selected by Architect from manufacturer's full range of colors.

E. Joint-Sealant Application: Interior acoustical joints in vertical surfaces and horizontal nontraffic surfaces.

1. Joint Location:

    a. Acoustical joints where indicated.

2. Joint Sealant: Acoustical.
3. Joint-Sealant Color: As selected by Architect from manufacturer's full range.

END OF SECTION 079200

SECTION 079223 – SECURITY JOINT SEALANTS

PART 1 - GENERAL

1.1 RELATED DOCUMENTS

A. Drawings and general provisions of the Contract, including General and Supplementary Conditions and Division 01 Specification Sections, apply to this Section.

1.2 SUMMARY

A. Section Includes:

1. Security Joint Sealant. **(SJS)**
2. Security Epoxy Resin Gap Sealant. **(SGS)**

B. Related Requirements:

1. Division 03 for Concrete
2. Division 04 for Masonry
3. Division 05 for Metals
4. Division 08 for Openings
5. Division 11 for Detention Equipment
6. Division 13 for Special Construction
7. Division 21 for Fire Suppression
8. Division 22 for Plumbing
9. Division 23 for HVAC
10. Division 26 for Electrical Systems
11. Division 27 for Communications
12. Division 28 for Electronic Safety & Security

1.3 SUBMITTALS

A. Product Data: For each joint sealant product indicated.

1. Certification by joint sealant manufacturer that sealants plus the primers and cleaners required for sealant installation comply with local regulations controlling use of volatile organic compounds.

B. Certificates by Manufacturer: That products supplied complies with performance requirements specified and are suitable for the use indicated.

1.4 QUALITY ASSURANCE

A. Installer Qualifications: Engage an experienced Installer who has completed joint sealant applications similar in material, design, and extent to that indicated for Project that have resulted in construction with a record of successful in-service performance.

1.5 DELIVERY, STORAGE, AND HANDLING

A. Deliver materials to Project site in original unopened containers or bundles with labels indicating manufacturer, product name and designation, color, expiration period for use, pot life, curing time, and mixing instructions for multicomponent materials.

B. Store and handle materials in compliance with manufacturer's recommendations to prevent their deterioration or damage due to moisture, high or low temperatures, contaminants, or other causes.

1.6 PROJECT CONDITIONS

A. Environmental Conditions: Do not proceed with installation of joint sealants under the following conditions:

1. When ambient and substrate temperature conditions are outside the limits permitted by joint sealant manufacturer.
2. When ambient and substrate temperature conditions are outside the limits permitted by joint sealant manufacturer or below 40 deg F (4.4 deg C).
3. When joint substrates are wet.
4. When joint substrates are dusty.

B. Joint Width Conditions: Do not proceed with installation of joint sealants where joint widths are less than allowed by joint sealant manufacturer for application indicated.

C. Joint Substrate Conditions: Do not proceed with installation of joint sealants until contaminants capable of interfering with their adhesion are removed from joint substrates.

PART 2 - PRODUCTS

2.1 MATERIALS

A. Compatibility: Provide joint sealants, joint fillers and other related materials that are compatible with one another and with joint substrates under conditions of service and application, as demonstrated by sealant manufacturer based on testing and field experience.

B. Colors: Provide color of exposed joint sealants to comply with the following:

1. Provide selections made by Architect from manufacturer's full range of standard colors for products of type indicated.

2.2 SECURITY JOINT SEALANT (SJS – Refer to matrix)

A. Manufacturers: Subject to compliance with requirements, provide products by one of the following flexible security sealants:

1. Sikaflex – 11 FC
2. Dyna Flex by Pecora Corp.
3. MasterSeal CR 195 byBASF

2.3 SECURITY EPOXY RESIN GAP FILLER (SGF – Refer to matrix)

A. Manufacturers: Subject to compliance with requirements, provide products by one of the following pick resistant low mod gel gap fillers:

1. Sika-Dur 23 by Sika Corp.
2. DynaPoxy by Pecora Corp.
3. MasterEmaco ADH 327 by BASF

2.4 JOINT SEALANT BACKING

A. General: Provide sealant backings of material that are non-staining; are compatible with joint substrates, sealants, primers, and other joint fillers; and are approved for applications indicated by sealant manufacturer based on field experience and laboratory testing.

B. Cylindrical Sealant Backings: ASTM C 1330, Type C (closed-cell material with a surface skin) as approved in writing by joint-sealant manufacturer for joint application indicated, and of size and density to control sealant depth and otherwise contribute to producing optimum sealant performance.

2.5 MISCELLANEOUS MATERIALS

A. Primer: Material recommended by joint sealant manufacturer where required for adhesion of sealant to joint substrates indicated, as determined from preconstruction joint sealant-substrate tests and field tests.

B. Cleaners for Nonporous Surfaces: Chemical cleaners acceptable to manufacturers of sealants and sealant backing materials, free of oily residues or other substances capable of staining or harming in any way joint substrates and adjacent nonporous surfaces and formulated to promote optimum adhesion of sealants with joint substrates.

C. Masking Tape: Non-staining, nonabsorbent material compatible with joint sealants and surfaces adjacent to joints.

PART 3 - EXECUTION

3.1 LOCATIONS

A. Provide security joint sealants and security gap filler work as required under the General, Mechanical, and Electrical Sections. See drawings and security matrix at the end of this Section.

3.2 EXAMINATION

A. Examine joints indicated to receive joint sealants, with Installer present, for compliance with requirements for joint configuration, installation tolerances, and other conditions affecting joint sealant performance. Do not proceed with installation of joint sealants until unsatisfactory conditions have been corrected.

3.3 PREPARATION

A. Surface Cleaning of Joints: Clean out joints immediately before installing joint sealants to comply with recommendations of joint sealant manufacturer and the following requirements:

1. Remove all foreign material from joint substrates that could interfere with adhesion of joint sealant, including dust, paints (except for permanent, protective coatings tested and approved for sealant adhesion and compatibility by sealant manufacturer), old joint sealants, oil, grease, waterproofing, water repellents, water, surface dirt, and frost.
2. Clean concrete, masonry, unglazed surfaces of ceramic tile, and similar porous joint substrate surfaces by brushing, grinding, blast cleaning, mechanical abrading, or a combination of these methods to produce a clean, sound substrate capable of developing optimum bond with joint sealants. Remove loose particles remaining from above cleaning operations by vacuuming or blowing out joints with oil-free compressed air.
3. Remove laitance and form release agents from concrete.
4. Clean metal, glass, porcelain enamel, glazed surfaces of ceramic tile, and other nonporous surfaces with chemical cleaners or other means that do not stain, harm substrates, or leave residues capable of interfering with adhesion of joint sealants.

B. Joint Priming: Prime joint substrates where indicated or where recommended by joint sealant manufacturer based on preconstruction joint sealant-substrate tests or prior experience. Apply primer to comply with joint sealant manufacturer's recommendations. Confine primers to areas of joint sealant bond; do not allow spillage or migration onto adjoining surfaces.

C. Masking Tape: Use masking tape where required to prevent contact of sealant with adjoining surfaces that otherwise would be permanently stained or damaged by such contact or by cleaning methods required to remove sealant smears. Remove tape immediately after tooling without disturbing joint seal.

3.4 INSTALLATION OF JOINT SEALANTS

A. Comply with joint sealant manufacturer's printed installation instructions applicable to products and applications indicated, except where more stringent requirements apply.

3.5 CLEANING

A. Clean off excess sealants or sealant smears adjacent to joints as work progresses by methods and with cleaning materials approved by manufacturers of joint sealants and of products in which joints occur.

3.6 PROTECTION

A. Protect joint sealants during and after curing period from contact with contaminating substances or from damage resulting from construction operations or other causes so that they are without deterioration or damage at time of Substantial Completion. If, despite such protection, damage or deterioration occurs, cut out and remove damaged or deteriorated joint sealants immediately so that and installations with repaired areas are indistinguishable from original work.

3.7 SEALANT MATRIX

LOCATIONS	ALL INMATE AREAS
DET. H.M. FRAMES TO WALL	SGF
DETENTION GLAZING	SJS (CONFIRM INSIDE OF CELLS)
ARCH. DOOR & WINDOW FRAMES	LJS
FLOOR JOINTS	SGF
CEILING JOINTS	SGF
MECH. GRILLES/ DIFFUSERS	SGF
SECURITY SINKS, SHOWERS	SGF
WATER CLOSETS & LAVITORIES	SGF
SPRINKLER HEADS/ PLUMBING	SJS
SECURITY LIGHT FIXTURES	SGF
EXPOSED CONDUIT /RACEWAYS	SGF
SWITCH/OUTLET/INMATE DURESS PLATES	SJS
DETENTION EQUIP.	SGF
INTERCOM SUBSTATIONS	SJS
GRAB BARS & TOILET PAPER HOLDER	SGF
WALL JOINTS	SJS

A. LJS/Latex Joint Sealants (See Specification Section 079200 for Joints Sealants).

B. SJS/Security Joint Sealant.

C. SGF/Security Epoxy Resin Gap Filler.

END OF SECTION 079223

SECTION 079500 - EXPANSION CONTROL

PART 1 - GENERAL

1.1 SUMMARY

A. This Section includes the following:

1. Architectural joint systems for building interiors.
2. Architectural joint systems for building exteriors.

B. Related Sections include the following:

1. Division 4 Section "Unit Masonry".
2. Division 4 Section “Stone Veneer Assemblies”.
3. Division 7 Section "Joint Sealants" for liquid-applied joint sealants.
4. Division 9 Section “Acoustical Panel Ceilings” for ceiling systems containing joint systems.

1.2 DEFINITIONS

A. Maximum Joint Width: Widest linear gap a joint system tolerates and in which it performs its designed function without damaging its functional capabilities.

B. Minimum Joint Width: Narrowest linear gap a joint system tolerates and in which it performs its designed function without damaging its functional capabilities.

C. Movement Capability: Value obtained from the difference between widest and narrowest widths of a joint opening typically expressed in numerical values (mm or inches) or a percentage (plus or minus) of nominal value of joint width.

D. Nominal Joint Width: The width of the linear opening specified in practice and in which the joint system is installed.

1.3 SUBMITTALS

A. Shop Drawings: Provide the following for each joint system specified:

1. Placement Drawings: Include line diagrams showing plans, elevations, sections, details, splices, blockout requirement, entire route of each joint system, and attachments to other work. Where joint systems change planes, provide isometric or clearly detailed drawing depicting how components interconnect.

2. Architectural Joint System Schedule: Prepared by or under the supervision of the supplier. Include the following information in tabular form:

   a. Manufacturer and model number for each joint system.
   b. Joint system location cross-referenced to Drawings.
   c. Nominal joint width.
   d. Movement capability.
   e. Classification as thermal or seismic.
   f. Materials, colors, and finishes.
   g. Product options.
   h. Fire-resistance ratings.

1.4 QUALITY ASSURANCE

A. Installer Qualifications: An employer of workers trained and approved by manufacturer.

B. Source Limitations: Obtain interior architectural joint systems through one source from a single manufacturer.

C. Product Options: Drawings indicate size, profiles, and dimensional requirements of architectural joint systems and are based on the specific systems indicated. Refer to Division 01 Section "Product Requirements."

   1. Do not modify intended aesthetic effects, as judged solely by Architect, except with Architect's approval. If modifications are proposed, submit comprehensive explanatory data to Architect for review.

D. Accessibility Requirements: Comply with applicable provisions in the U.S. Architectural & Transportation Barriers Compliance Board's "Americans with Disabilities Act (ADA), Accessibility Guidelines (ADAAG)" and ICC A117.1.

1.5 COORDINATION

A. Coordinate installation of exterior wall joint systems with roof expansion assemblies to ensure that wall transitions are watertight.

PART 2 - PRODUCTS

2.1 MATERIALS

A. Aluminum: ASTM B 221 (ASTM B 221M), Alloy 6063-T5 for extrusions; ASTM B 209 (ASTM B 209M), Alloy 6061-T6 for sheet and plate.

   1. Apply manufacturer's standard protective coating on aluminum surfaces to be placed in contact with cementitious materials.

2. Class II, Clear Anodic Finish: AA-M12C22A31 (Mechanical Finish: nonspecular as fabricated; Chemical Finish: etched, medium matte; Anodic Coating: Architectural Class II, clear coating 0.010 mm or thicker) complying with AAMA 611.

B. Elastomeric Seals: Preformed elastomeric membranes or extrusions to be installed in metal frames.

C. Compression Seals: ASTM E 1612; preformed elastomeric extrusions having an internal baffle system and designed to function under compression.

D. Cellular Foam Seals: Extruded, compressible foam designed to function under compression.

E. Accessories: Manufacturer's standard anchors, clips, fasteners, set screws, spacers, and other accessories compatible with material in contact, as indicated or required for complete installations.

2.2 ARCHITECTURAL JOINT SYSTEMS, GENERAL

A. General: Provide architectural joint systems of design, basic profile, materials, and operation indicated. Provide units with capability to accommodate variations in adjacent surfaces.

1. Furnish units in longest practicable lengths to minimize field splicing. Install with hairline mitered corners where joint changes direction or abuts other materials.
2. Include factory-fabricated closure materials and transition pieces, tee-joints, corners, curbs, cross-connections, and other accessories as required to provide continuous joint systems.

2.3 ARCHITECTURAL JOINT SYSTEMS

A. Manufacturers: Subject to compliance with requirements, provide products by one of the following:

1. Architectural Art Mfg., Inc.
2. Balco, Inc.
3. Construction Specialties, Inc.
4. InPro Corporation.
5. MM Systems Corporation.
6. Watson Bowman Acme Corp.

B. Floor-to-Floor Joint Systems:

1. Basis-of-Design Product: Construction Specialties, Inc.; RFC-300.

2. Joint Width: As indicated on Drawings.

3. Fire-Resistance Rating: Provide expansion control system and fire-barrier assembly with a rating not less than that of adjacent construction.

4. Finish: As indicated on Drawings.

C. Wall-to-Wall Joint Systems:

1. Basis-of-Design Product: Construction Specialties, Inc.; AFW Series, VF Series.

2. Joint Width: As indicated on Drawings.

3. Fire-Resistance Rating: Provide expansion control system and fire-barrier assembly with a rating not less than that of adjacent construction.

4. Finish: As indicated on Drawings.

D. Curtain Wall-to-Curtain Wall

1. Basis-of-Design Product: Construction Specialties, Inc.; ASM Series, ASM-X Series.

2. Joint Width: As indicated on Drawings.

3. Fire-Resistance Rating: Provide expansion control system and fire-barrier assembly with a rating not less than that of adjacent construction.

4. Finish: As indicated on Drawings.

E. Ceiling-to-Ceiling Joint Systems:

1. Basis-of-Design Product: Construction Specialties, Inc.; FCS Series, FWS Series.

2. Joint Width: As indicated on Drawings.

3. Fire-Resistance Rating: Provide expansion control system and fire-barrier assembly with a rating not less than that of adjacent construction.

4. Finish: As indicated on Drawings.

F. Bellows: Manufacturer’s standard EPDM with overlap and seal between units.

2.4 FINISHES

A. Comply with NAAMM's "Metal Finishes Manual for Architectural and Metal Products" for recommendations for applying and designating finishes.

B. Protect mechanical finishes on exposed surfaces from damage by applying a strippable, temporary protective covering before shipping.

C. Appearance of Finished Work: Noticeable variations in same piece are not acceptable.

PART 3 - EXECUTION

3.1 EXAMINATION

A. Examine surfaces where architectural joint systems will be installed for installation tolerances and other conditions affecting performance of work.

1. Proceed with installation only after unsatisfactory conditions have been corrected.

3.2 PREPARATION

A. Prepare substrates according to architectural joint system manufacturer's written instructions.

B. Coordinate and furnish anchorages, setting drawings, and instructions for installing joint systems. Provide fasteners of metal, type, and size to suit type of construction indicated and to provide for secure attachment of joint systems.

3.3 INSTALLATION

A. Comply with manufacturer's written instructions for storing, handling, and installing architectural joint assemblies and materials unless more stringent requirements are indicated.

B. Compression Seals: Apply adhesive or lubricant adhesive as recommended by manufacturer to both surfaces before installing compression seals.

C. Terminate exposed ends of joint assemblies with field- or factory-fabricated termination devices.

3.4 PROTECTION

A. Do not remove protective covering until finish work in adjacent areas is complete. When protective covering is removed, clean exposed metal surfaces to comply with manufacturer's written instructions.

B. Protect the installation from damage by work of other Sections. Where necessary due to heavy construction traffic, remove and properly store cover plates or seals and install temporary protection over joints. Reinstall cover plates or seals prior to Substantial Completion of the Work.

END OF SECTION 079500

SECTION 081113 - HOLLOW METAL DOORS AND FRAMES

PART 1 GENERAL

1.1 SUMMARY

A. Section Includes: Work under this section comprises of furnishing hollow metal doors and frames, including transom frames, sidelight and window frames with provision for glazed, paneled or louvered openings, fire labeled and non-labeled, as scheduled.

1. Flush Steel Doors.
2. Steel frames.
3. Hollow Metal Framing Systems.

B. Related Sections: Related documents, drawings and general provisions of contract, including General and Supplementary Conditions and Division 1 specification sections apply to this section. The latest published edition of each reference applies.

1. Section 061000 - Rough Carpentry
2. Section 081400 - Wood Doors
3. Section 087100 - Door Hardware
4. Section 088000 - Glazing
5. Section 099000 - Painting and Coating

C. References: The intent of this document is that all hollow metal and its application will comply or exceed the standards identified below. The latest published edition of each reference applies.

1. ANSI - American National Standards Institute - ansi.org
2. NFPA - National Fire Protection Association
    a. NFPA 80 - Standard for Fire Doors and Other Opening Protectives
    b. NFPA 101 – Life Safety Code
    c. NFPA 105 – Standard Smoke Door Assemblies and Other Opening Protectives
    d. NFPA 252 - Standard Method of Fire Tests of Door Assemblies.
3. DHI - Door and Hardware Institute – Door Security + Safety Professionals
    a. Installation Guide for Doors and Hardware.
    b. Recommended Locations for Architectural Hardware for Standard Steel Doors and Frames.
    c. Recommended Locations for Builders' Hardware for Custom Steel Doors and Frames.
4. SDI - Steel Door Institute
    a. SDI-105 – Recommended Erection Instructions for Steel Frames
    b. SDI-107 – Hardware on Steel Doors (Reinforcement - Application)
    c. SDI-111 - Recommended Details for Standard Steel Doors, Frames, Accessories, and Related Components
    d. SDI-117 - Manufacturing Tolerances Standard Steel Doors and Frames
    e. SDI-118 – Basic Fire Door Requirements
    f. SDI A250.3 Test Procedure and Acceptance Criteria for Factory Applied Finish Coatings for Steel Doors and Frames
    g. SDI A250.4 - Test Procedure and Acceptance Criteria for Physical Endurance for Steel Doors, Frames, and Frame Anchors
    h. SDI A250.6 - Recommended Practice for Hardware Reinforcing on Standard Steel Doors

and Frames
i. SDI A250.8 - SDI-100 Specifications for Standard Steel Doors and Frames
j. SDI A250.10 - Test Procedure and Acceptance Criteria for Prime Painted Steel Surfaces for Steel Doors and Frames
k. SDI A250.11 - Recommended Erection Instructions for Steel Frames
l. SDI A250.13 Testing and Rating of Severe Windstorm Resistant Components for Swinging Door Assemblies

5. BHMA - Builders Hardware Manufacturers Association
   a. BHMA A156.115 - Hardware Preparations in Standard Steel Doors and Frames.
   b. BHMA A156.7 - Hinge Template Dimensions.
6. ASTM - American Society for Testing Materials
   a. ASTM A568/A568M-19a Standard Specification for Steel, Sheet, Carbon, Structural, and High-Strength, Low-Alloy, Hot-Rolled and Cold-Rolled, General Requirements
   b. ASTM A879/A879M-12(2017) Standard Specification for Steel Sheet, Zinc Coated by the Electrolytic Process for Applications Requiring Designation of the Coating Mass on Each Surface
   c. ASTM A653/A653M-19a Standard Specification for Steel Sheet, Zinc-Coated (Galvanized) or Zinc-Iron Alloy-Coated (Galvannealed) by the Hot-Dip Process
   d. ASTM A924/A924M-19 Standard Specification for General Requirements for Steel Sheet, Metallic-Coated by the Hot-Dip Process
   e. ASTM A1008/A1008M-18 Standard Specification for Steel, Sheet, Cold-Rolled, Carbon, Structural, High-Strength Low-Alloy, High-Strength Low-Alloy with Improved Formability, Solution Hardened, and Bake Hardenable
7. ICC - International Code Counsel
   a. ICC A117.1 – Accessible and Usable Building and Facilities.
   b. ICC 500 Standard for the Design and Construction of Storm Shelters
8. UL - Building Materials Directory; Underwriters Laboratories Inc.
   a. UL 10B - Standard for Neutral Pressure Fire Tests of Door Assemblies
   b. UL 10C - Standard for Positive Pressure Fire Tests of Door Assemblies
   c. UL 1784 – Air Leakage Test of Door Assemblies
   d. UL 752 – Standard for Bullet-Resisting Equipment
9. NAAMM/HMMA – National Association of Architectural Metal Manufacturers/Hollow Metal Manufacturers Association
   a. NAAMM/HMMA 840 – Guide Specification for Receipt, Storage, and Installation of Hollow Metal Doors and Frames.
10. WH - Certification Listings; Warnock Hersey International Inc.
11. Federal Emergency Management Agency (FEMA) 361 Guidelines, ICC500 - 2014

1.2 SUBSTITUTIONS:

A. All substitution requests must be submitted within the procedures and time frame as outlined in Division 1, General Requirements. Approval of products is at the discretion of the architect and their consultant

1.3 SUBMITTALS

A. Submittals to comply with provisions of Division 01, Submittal Procedures.
B. Product Data: Manufacturer's standard details and catalog data indicating compliance with referenced standards and manufacturer's installation instructions.
C. Shop Drawings: Provide a schedule of doors and frames using same reference numbers for details and door openings as those on the contract documents. Shop drawings should include the following information to ensure doors and frames are properly prepared and coordinated to receive hardware.

1. Elevations of each door and frame type.
2. Details for door core.
3. Details of doors, including vertical- and horizontal-edge details and metal thicknesses.
4. Locations of cutouts for glass and louvers.
5. Frame details for each frame type, including dimensioned profiles and metal thicknesses.
6. Mounting locations for hardware.
7. Thickness of reinforcement/preparations for hardware.
8. Details of anchorages, joints, field splices, and connections.
9. Details of accessories.
10. Details of moldings, removable stops, and glazing.
11. Fire ratings.
12. Finish.

D. LEED Submittals: Provide documentation of how the requirements will be met:

1. Program Based on the U.S. Green Building Council LEED Reference Guide for Green Building Design and Construction Publication for the design, construction and major renovations of commercial and institutional buildings including core and shell and K-12 school projects.
2. Credits MR 4.1 and MR 4.2: Use materials with recycled content such that the sum of the post-consumer recycled content plus one-half of the pre-consumer content constitutes at least 20% total based on cost of the total values of the material in the project.

   a. Credits:
      1) MR 4.1: 1 point -recycled content is at least 10% of the total value of the materials in the entire project.
      2) MR 4.2: 1 additional point added to the MR 4.1 point – recycle content is at least 10% (MR 4.1 percentage plus an additional amount to equal a minimum of 20%) of the total value of the materials in the entire project.

3. Credits 5.1 and 5.2: Used building materials and products that are extracted and manufactured within the region, thereby supporting the use of indigenous resources and reducing the environmental impacts resulting from transportation.

   a. Credits:
      1) MR 5.1: 1 point – At least 10% of the materials are extracted, processed and manufactured regionally.
      2) MR 5.2: 1 additional point added to the MR 5.1 point – At least 20% (MR 5.1 percentage plus an additional amount to equal a minimum of 20%) of materials are extracted, processed and manufactured regionally.

E. Samples: 12 by 12 inches (304 mm by 304 mm) cut away sample door with provisions for lockset, hinge and corner section of frame welded and prepped for specified hardware. Sample should be furnished with submittals for Owner approval. After approval return sample to door/frame supplier as confirmation of approved construction.
F. Closeout Submittals to comply with Division 1, Closeout Submittals procedures.

G. Furnish copies of manufacturer's warranty information and maintenance instructions.

1.4 QUALITY ASSURANCE

A. Hollow Metal Distributor is to be a direct account of the manufacturer of the products furnished. In addition, that distributor must have in their regular employment an Architectural Hardware Consultant (AHC), Certified Door Consultant (CDC), an Architectural Openings Consultant (AOC), a Door & Hardware Consultant (DHC) or equivalent door and hardware industry experience who will be available to consult with the Architect and Contractor regarding any matters affecting the door and frame opening.
B. Manufacturer Qualifications: Certified Member of the Steel Door Institute in good standing.
C. Installer: Minimum five years documented experience installing products specified this Section.
D. Certificates:

1. Manufacturer's certification that products comply with referenced standards.
2. Hollow Metal Manufacturer must provide documentation that they are an SDI Certified Manufacturer.

E. Fire Rated Doors and Frames: Underwriters' Laboratories, Intertek Testing Services/Warnock Hersey, and Factory Mutual labeled fire doors and frames:

1. Provide labeled fire doors and frames in accordance with Underwriters Laboratories standard UL10C Positive Pressure Fire Tests of Door Assemblies.
2. Construct and install doors and frames to comply with current issue of NFPA 80.
3. Manufacture Underwriters' Laboratories labeled doors and frames in strict compliance to UL procedures, and provide the degree of fire protection, heat transmission and panic loading capability indicated by the opening class.
4. Manufacture Intertek Testing Services /Warnock Hersey labeled doors and frames in strict compliance to ITS/WH procedures and provide the degree of fire protection capability indicated by the opening class.
5. Manufacture Factory Mutual labeled doors and frames in strict compliance to FM procedures, and provide the degree of fire protection, heat transmission and panic loading capability indicated by the opening class.
6. Affix a physical label or approved marking to each fire door and/or fire door frame, at an authorized facility as evidence of compliance with procedures of the labeling agency.
7. Conform to applicable codes for fire ratings. It is the intent of this specification that doors, frames, hardware and their application comply or exceed the standards for labeled openings. In case of conflict between types required for fire protection, furnish type required by NFPA and UL.
8. Provide Temperature Rise Fire Door Assemblies in exit enclosures and exit passageway with maximum transmitted temperature end point rating of not more than 250 degrees F (121 degrees C) above ambient at the end of 30 minutes of the standard fire test exposure.
9. For openings required to be fire rated exceeding limitations of labeled assemblies, submit manufacturer's certification that each door and frame assembly has been constructed to conform to design, materials and construction equivalent to requirements for labeled construction.

1.5 DELIVERY, STORAGE, AND HANDLING

A. Packing and Shipping

1. The use of non-vented plastic or canvas shelters that can create a humidity chamber shall be

avoided to prevent rust or damage.
2. Provide cardboard wrapped or crated product to provide protection during transit and job site storage
3. Should wrappers become wet, remove immediately

B. Delivery and Site Acceptance

1. The supplier shall deliver all materials to the project site; direct factory shipments are not allowed unless agreed upon beforehand. Supplier shall coordinate delivery times and schedules with the contractor.
2. Deliver doors cardboard wrapped or crated to provide protection during transit and job site storage. Provide additional protection to prevent damage to any factory-finished doors. Mark all doors and frames with architects opening numbers as shown on the contract documents and shop drawings on the center hinge preparation location.
3. Upon delivery, check in doors and frames jointly with supplier. Inspect doors and frames upon delivery for damage, correct quantities or shortages. Minor damages may be repaired provided refinished items are equal in all respects to new work and acceptable to the architect. Otherwise, remove and replace damaged goods as directed. Note shortages and replace immediately.

C. Storage and Protection

1. Handle, store and protect products in accordance with the manufacturers printed instructions, ANSI/SDI A250.8 – Specifications for Standard Steel Doors and Frames, A250.10 - Test Procedure and Acceptance Criteria for Prime Painted Steel Surfaces for Steel Doors and Frames, or ANSI/SDI A250.3 - Test Procedure and Acceptance Criteria for Factory Applied Finish Coatings for Steel Doors and Frames and NAAMM/HMMA 840 – Guide Specification for Receipt, Storage, and Installation of Hollow Metal Doors and Frames.
2. Store all materials in a dry area. All hollow metal material shall be stored so that it does not come in contact with water or moisture. Protect units from adverse weather elements.
3. Place units on 4 inch (102 mm) high wood sills to prevent rust and damage.
4. Store doors vertically under a properly vented cover, five units maximum in a stack with a ¼” space between doors to permit air circulation.
5. Store frames in an upright position with heads uppermost under cover.
6. Store assembled frames five units maximum in a stack with 2-inch (51 mm) space between frames to permit air circulation.

1.6 COORDINATION

A. Coordinate Work with other directly affected sections involving manufacture or fabrication of internal cutouts and reinforcement for door hardware, electric devices and recessed items.
B. Coordinate Work with frame opening construction, door and hardware installation.
C. Sequence installation to accommodate required door hardware.
D. Verify field dimensions for factory assembled frames prior to fabrication.

1.7 WARRANTY

A. Comply with Division 01 Closeout Submittals
B. All doors and frames shall be warranted in writing by the manufacturer against defects in materials and workmanship for a period of one (1) year commencing on the date of manufacture.

PART 2 PRODUCTS

2.1 MANUFACTURERS

A. Basis of Design - MESKER a dormakaba Brand, Web: http://meskerdoor.com

1. Acceptable Manufacturer - Curries an ASSA Abloy Company
2. Acceptable Manufacturer - Steelcraft an Allegion Company

B. Provide all steel doors and frames from a single SDI certified manufacturer.

2.2 General:

A. Physical performance: Units shall comply with the 1 million cycles swing test requirement per ANSI A250.4 - Level A.

B. Finishing:

1. Prime Gray to meet SDI A250.10

C. Electrical Requirements: Coordinate all electrical requirements for doors and frames. Make provisions for installation of electrical items so that wiring can be readily removed and replaced.

1. Provide cutouts and reinforcements required for metal doors and frames to accept electric components.
2. Frame with Electrical Hinges: Junction box welded over center hinge reinforcing. Top or bottom hinge locations are not permitted.
3. Coordinate with Section 08 71 00 (or Division 28) for electrified hardware items.

2.3 DOORS

A. General: Construct exterior/interior doors to the following designs and gauges:

1. Exterior Doors: Zinc-Iron Alloy-Coated galvannealed steel (A40) (A60) or Zinc-Coated Galvanized steel (G90) that conforms to ASTM A653/A653M:

   a. Thickness:
      1) 16 gauge

   b. Provide flush top/closed top channel for exterior swing-out doors to eliminate moisture penetration. Galvannealed steel top caps are permitted.

2. Interior Doors: Cold-rolled steel, ASTM A 1008/A 1008M:

   a. Thickness:
      1) 20 gauge (Residential Units)
      2) 18 gauge (Common Area)

3. Door Thickness: 1-3/4 inches
4. Vertical edge seams: Provide doors with continuous vertical mechanical inter-locking joints at lock and hinge edges. Finish edges as follows:

   a. Visible Interlocked Edge: Continuous vertical mechanical interlocking joints with visible edge seams.
   b. Filled Vertical Edges (S): Continuous vertical mechanical interlocking joints with tack welds every 8 inches. Putty or filler applied to the edge seam and ground smooth.
   c. Welded Vertical Edges (NVS): Continuous vertical weld and pressed smooth with no putty or filler.

5. Bevel hinge and lock door edges 1/8 inch (3 mm) in 2 inches (50 mm). Square edges on hinge and/or lock stiles are acceptable.

6. Reinforce top and bottom of doors with galvannealed 16 gauge minimum, welded to both panels.
7. Fire Rating: Supply door units bearing Labels for fire ratings indicated in Door Schedule for the locations indicated.
8. Core Adhesion System – Basis of design - Moisture Cure Polyurethane Hot Melt:
    a. Adhesives are to cure completely, meaning once set, they cannot be re-melted and will not soften or freeze and lose adhesion.
    b. Adhesive system will have an enhanced resistance to flame spread in its cured state designed to pass UL 10C, Positive Pressure Fire Tests of Door Assemblies.
    c. Bonded assemblies will withstand prolonged exposure from -35°F(-37°C) to 200°F (93°C) temperatures without exhibiting any signs of bond failure.
    d. Cured adhesive film will remain flexible to allow for differences in thermal expansion and contraction of various substrates without sacrificing bond performance.
9. Core Material
    a. Interior / Units: Treadcore Polystyrene
    b. Exterior / Common Steel Stiffened Core with Mineral Wool (Mesker ST Series)
        1) Vertical stiffeners, hat-shaped or Z-shaped, minimum 20 gauge steel, spaced 6 inches apart and affixed to inside of face sheets 6 inches on center; polystyrene or mineral wool insulation between stiffeners.
10. Glass moldings and stops:
    a. Fabricate from 18 gauge minimum steel:
    b. Install trim into the door as a four-sided welded assembly with mitered, reinforced and welded corners.
    c. Trim: identical on both sides of the door.
    d. Labeled and non-labeled doors: use the same trim to match esthetics.
    e. Channeling requirements:
        1) Cutouts larger than 36” in height require 18 gauge perimeter channelings in the cutout of the door prior to installation of the lite kit our louver.
11. Hardware Reinforcements:
    a. Doors shall be mortised and adequately reinforced per the manufacturers guidelines for all hardware. Required mortise hardware reinforcements shall be drilled and tapped at the factory. Surface applied hardware shall be field drilled by hardware installer.
    b. Hinge reinforcements for full mortise hinges: minimum 7 gauge with an extra long, high frequency top hinge reinforcement as a standard feature.
    c. Lock reinforcements: minimum 16 gauge.
    d. Closer reinforcements: minimum 14 gauge steel.
    e. Projection welded hinge and lock reinforcements to the edge of the door.
    f. Provided adequate reinforcements for other hardware as required.

B. Full Flush Doors:
    1. Basis of Design: Mesker N Series.

C. Embossed Panel Doors:
    1. Basis of Design: Mesker EP-Series,

2.4 DOOR FRAMES

A. General: Construct exterior/interior metal door frames to the following designs and gauges;

1. Exterior Frames: Zinc-Iron Alloy-Coated galvannealed steel (A40) (A60) or Zinc-Coated Galvanized steel (G90) that conforms to ASTM A 653/A653M:

    a. Thickness:
        1) 14 gauge.

2. Interior Frames in Masonry: Zinc-Iron Alloy-Coated galvannealed steel (A40) (A60) or Zinc-Coated Galvanized steel (G90) that conforms to ASTM A 653/A653M:

    a. Thickness:
        1) 16 gauge.

3. Interior Frames in stud wall construction: cold rolled steel, ASTM A 1008/A 1008M.

    a. Thickness:
        1) 16 gauge.

4. Interior KD Drywall Frames (Slip-On construction): cold rolled steel, ASTM A 1008/A 1008M.

    a. Thickness:
        1) 16 gauge.

B. Flush Steel Frames:

1. Basis of Design: Mesker F-Series.

2. Profile:

    a. Face:
        1) 2 Inches face dimension and types and throat dimensions indicated on the Door Schedule.
        2) Custom special face dimension and types and throat dimensions indicated on the Door Schedule.

    b. Stops:
        1) Standard 5/8-inch-high stops
        2) Kerf style stops: 5/8-inch-high stops w/ 1/8-inch kerf slot positioned in the side of the stop.
        3) Thermal break w/ kerf stops: 5/8 inch-high stops. Steel used to make the stop on the frame will connect to the steel on the rabbet through a material that allows for a thermal break. A kerf slot for gasketing to be built into the thermal break.

3. Provide reinforcements and accessories for specified hardware per SDI 250.6.
4. Anchors: Locate adjustable anchors in each jamb 6 inches from the top of the door opening to hold frame in rigid alignment.

    a. Exposed fastener type; recessed hole at base of jamb for countersunk fastener installation.
    b. Snap in base anchors
    c. Strap anchors welded to frame

5. Fire Rating: Supply frame units bearing Labels for fire ratings indicated in Door Schedule for the locations indicated.

C. Steel Frames for Drywall:

1. Basis of Design: Mesker FDJ-Series.

2. Profile:
    a. Face:
        1) 2 Inches face dimension and types and throat dimensions indicated on the Door Schedule.
        2) Custom special face dimension and types and throat dimensions indicated on the Door Schedule.
    b. Stops:
        1) Standard 5/8-inch-high stops
        2) Kerf style stops: 5/8-inch-high stops w/ 1/8-inch kerf slot positioned in the side of the stop (where indicated in details).
3. Provide reinforcements and accessories for specified hardware per SDI 250.6.
4. Anchors: Locate adjustable anchors in each jamb 6 inches from the top of the door opening to hold frame in rigid alignment.
    a. Exposed fastener type; recessed hole at base of jamb for countersunk fastener installation.
    b. Snap in base anchors
    c. Strap anchors welded to frame
5. Fire Rating: Supply frame units bearing Labels for fire ratings indicated in Door Schedule for the locations indicated.

2.5 HOLLOW METAL FRAMING SYSTEMS

A. Hollow Metal Framing Systems:

1. Basis of Design: Mesker S-Series, M-Series.
2. Components: Construct architectural stick frame assemblies of standard frame components, fabricated as specified.
    a. Exterior Frame Material: Zinc-Iron Alloy-Coated galvannealed steel (A60) or Zinc-Coated Galvanized steel (G90) that conforms to ASTM A 653/A653M, 14 gauge galvannealed steel.
    b. Interior Frames in Masonry: Zinc-Iron Alloy-Coated galvannealed steel (A40) or Zinc-Coated Galvanized steel (G90) that conforms to ASTM A 653/A653M, 16 gauge galvannealed steel.
    c. Interior Frames in stud wall construction: 16 gauge cold rolled steel, ASTM A 1008/A 1008M steel.
    d. Include galvannealed components and internal reinforcements with galvannealed frames.
3. Frame component requirements:
    a. Prepare required sticks at door openings and frame assemblies for hardware as specified in Section 087100.
    b. Fabricate frame assemblies from three basic components:
        1) Open Sections (perimeter members) identical in configuration to standard frames.
        2) Closed sections (intermediate members) with identical jamb depth, face dimensions, and stops as open sections.
        3) Sill sections: To be flush with both faces of adjacent vertical members. Cut individual components to length and notched to assure square joints and corners.
    c. Externally welded face joints at meeting mullions or between mullions and other frame members on the face surfaces only. Grind and finish face joints smooth.

d. Fabricate frame assemblies for shipment to the jobsite completely welded.
   1) Field joints permissible only when the size of the total assembly exceeds shipping limitations.
   2) Fabricate oversized frames in sections designated for splicing in the field.

e. Pierced and dimpled glazing beads for use with manufacturers' standard fasteners.
f. Provide necessary anchors for jambs, heads, and sills of assemblies.
g. Verify field dimensions as required. Do not begin fabrication until these dimensions have been verified and approved.

4. Accessories:

   a. Glazing Bead: Formed steel sheet; screw-attached.
   b. Steel Panels:
      1) 1/2-inch – 1 inch thick and manufactured from 18 gauge or 16 gauge thick non-galvannealed or galvannealed steel faces with a polystyrene core.
      2) 1-3/4 inches thick and manufactured from 18 gauge or 16 gauge thick non-galvannealed or galvannealed steel faces with a steel stiffened core for fire rated openings.

5. Fire Rating: Provide factory assembled welded units bearing Labels for fire ratings indicated on the Drawings.

2.6 ACCESSORIES

A. Anchors: Manufacturer's standard framing anchors, specified in manufacturer's printed installation instructions for project conditions.
B. Astragals for pairs of doors: Manufacturer's standard for labeled and non-labeled openings.
C. Plaster Guards: Same material as door frame, minimum 24 gauge (0.5 mm) minimum; provide for all strike boxes. Plaster guards not mandatory on interior after set frames.
D. Silencers: Resilient rubber, Inserted type, three per strike jamb for single openings. Stick-on silencers shall not be permitted except on hollow metal framing systems.
E. Glazing: Specified in Section 088000.

2.7 FABRICATION

A. Steel Frames:

1. Fabricate steel door and frame units to be rigid, neat in appearance, and free from defects, warp, or buckle. Where practical, fit and assemble units in manufacturer's plant. Clearly identify work that cannot be permanently factory assembled before shipment, to assure proper assembly at Project site. Comply with ANSI/SDI 100 requirements.

   a. Clearances shall comply with the requirements of NFPA 80.

2. Three-piece knock-down frames: Head and jamb intersecting corners die-cut, mitered at 45 degrees, with locking tabs for rigid connection when assembled.
3. Factory-welded frames: Head and jamb intersecting corners mitered at 45 degrees, with back welded joints ground smooth.

   a. Continuous face weld the joint between the head and jamb faces along their length either internally or externally. Grind, prime paint, and finish smooth face joints with no visible face seams.
   b. Externally weld, grind, prime paint, and finish smooth face joints at meeting mullions or

between mullions and other frame members per a current copy of ANSI/SDI A250.8.

4. Provide temporary steel spreaders (welded to the jambs at each rabbet of door openings) on welded frames during shipment. Remove temporary steel spreaders prior to installation of the frame.

B. Tolerances shall comply with SDI-117 "Manufacturing Tolerances for Standard Steel Doors and Frames."
C. Fabricate concealed stiffeners, reinforcement, edge channels, louvers, and moldings from either cold-rolled or hot-rolled steel sheet.
D. Unless otherwise indicated, provide exposed fasteners with countersunk flat or oval heads for exposed screws and bolts.
E. Prepare doors and frames to receive mortised and concealed hardware per final door hardware schedule and templates provided by hardware supplier. Comply with applicable requirements of SDI-107 and ANSI-A115 Series specifications for door and frame preparation for hardware.
F. Reinforce doors and frames to receive surface-applied hardware per SDI A250.6. Drilling and tapping for surface-applied hardware shall be done at Project site. Provide internal reinforcements for all doors to receive door closers and exit devices where scheduled.
G. Locate hardware as indicated on Shop Drawings or, if not indicated, per the Door and Hardware Institute's (DHI) "Recommended Locations for Architectural Hardware for Standard Steel Doors and Frames."

2.8 FlNlSHES

A. Chemical Treatment: Treat steel surfaces to promote paint adhesion.
B. Exposed door and frame surfaces to be cleaned and treated then coated with rust inhibitive primer. Water-based primer and color paint finishes to be free of Hazardous Air Pollutants (HAPS) and Volatile Organic Compounds (VOCs). Paint to comply with ANSI A250.3 and A250.10.

PART 3 EXECUTION

3.1 EXAMINATION

A. Verify that project conditions are acceptable before beginning installation of frames.

1. Verify that completed openings to receive knock-down wrap-around frames are of correct size and thickness.
2. Verify that completed concrete or masonry openings to receive butt type frames are of correct size.

B. Do not begin installation until conditions have been properly prepared.
C. Correct unacceptable conditions before proceeding with installation.

3.2 INSTALLATION

A. Install doors and frames in accordance with manufacturer's printed installation instructions and with Steel Door Institute's recommended erection instructions for steel frames SDI A250.11 and NAAMM/HMMA 840.
B. DHI – Door and Hardware Institute – Door Security + Safety Professionals – Installation Guide for Doors and Hardware
C. Fire Doors and Frames: Install in accordance with SDI A 250.11 and NFPA 80.

1. To ensure compliance with Positive Pressure criteria as required by UBC7-2, UL10C, NFPA5000 and all applicable Local, State and National Code Jurisdictions, all Doors and Frames should

be checked for accurate installation per Manufacturers installation instructions to provide proper fire and Smoke Gasketing as tested and listed.

2. Fit hollow-metal doors accurately in frames, within clearances specified in SDI A 250.11 and SDI 100. Install fire rated doors with clearances specified in NFPA 80.

D. Comply with provisions of SDI-105, "Recommended Erection Instructions for Steel Door Frames," unless otherwise indicated. Set frames accurately in position, plumbed, aligned, and braced securely until permanent anchors are set.

1. Except for frames located in existing concrete, masonry, or gypsum board assembly construction, place frames before constructing enclosing walls and ceilings.
2. In masonry construction, install at least 3 wall anchors per jamb adjacent to hinge location on hinge jamb and at corresponding heights on strike jamb. Acceptable anchors include masonry wire anchors and masonry T-shaped anchors. Use additional anchors as required for height per manufacturers' installation instructions.
3. At existing concrete or masonry construction, install at least 3 completed opening anchors per jamb adjacent to hinge location on hinge jamb and at corresponding heights on strike jamb. Set frames and secure to adjacent construction with bolts and masonry anchorage devices. Use additional anchors as required for height per manufacturers' installation instructions.
4. In metal-stud partitions, install at least 3 wall anchors per jamb at hinge and strike levels. In steel-stud partitions, attach wall anchors to studs with screws. Secure Sill Anchors to floor. Use additional anchors as required for height per manufacturers' installation instructions.
5. Drywall series frames are designed for installation in interior applications after construction of wood or metal stud and drywall applications. Drywall series frames are provided with adjustable jamb lock anchors for secure installation. Install frames per manufacturers' installation instructions. Adjust anchors and secure sill and baseboard anchors as provided.

E. To comply with the Texas Department of Insurance TDI –

1. Wall Framing Construction: The door assemblies may be mounted to several types of wall framing construction. The types of wall framing construction allowed include:

   a. Concrete (minimum compressive strength: 3,000 psi)
   b. Grout filled concrete block
   c. Hollow concrete block
   d. Steel (minimum 1/8", Fy = 36 ksi)
   e. Aluminum (minimum 1/8" thick, 6063-T6)
   f. Wood (Spruce-Pine-Fir, minimum S.G. = 0.42)

2. Fastener Requirements:

   a. Refer to the approved drawings for the anchor layout and notes.
   b. Refer to the approved drawings for the minimum embedment depths for the fasteners and the minimum edge distances (minimum distance fastener must be from the edge of the substrate material) for the fasteners.

F. Remove temporary steel spreaders prior to installation of frames.

G. Set frames accurately in position; plumb, align and brace until permanent anchors are set. After wall construction is complete, remove temporary wood spreaders.

1. Field splice only at approved locations indicated on the shop drawings.
2. Weld, grind, and finish as required to conceal evidence of splicing on exposed faces.

H. Provide full height 3/8 inch (9.5 mm) to 1-1/2 inch (38 mm) thick strip of polystyrene foam blocking at frames requiring grouting. Apply the strip to the back of the frame to facilitate field drilling or tapping.

I. Grouting Hollow Metal Frames:

1. Provide bituminous coating on interior of grout filled jambs.
2. Provide and install temporary bottom and intermediate wood spreaders to maintain proper width and avoid bowing or deforming of frame members. Refer to ANSI A250.11-2001 and NAAMM/HMMA 840.
3. Comply with ANSI/SDI Standard A250.8, paragraph 4.2.2, and HMMA 820 TN01 Grouting Hollow Metal Frames, whereby grout will be mixed to provide a 4 inch (102 mm) maximum slump consistency and hand toweled into place. Do not use grout mixed to a thinner consistency.
4. Provide a vertical wood brace during grouting of frame at openings over 4 foot (1219 mm) wide, to prevent sagging of frame header.

J. Glaze and seal exterior transom, sidelight and window frames in accordance with HMMA-820 TN03.

K. Apply hardware in accordance with hardware manufacturers' instructions and Section 087100 of these Specifications. Install hardware with only factory-provided fasteners. Install silencers. Adjust door installation to provide 1/8” at head and 1/8” at strike and hinge jamb with door undercut to meet fire ratings and floor conditions to achieve maximum operational effectiveness and appearance.

3.3 FIELD QUALITY CONTROL

A. Fire-Rated Door Assembly Testing:

1. Upon completion of the installation, test each fire door assembly to confirm proper operation of its closing device and verify that it meets all criteria of a fire door assembly per NFPA 80.
2. Perform inspections by individuals with documented knowledge and understanding of the operation components of the type of door being tested per NFPA 80 and NFPA 101.
3. Provide a written record to the Owner with copies available to the Authorities Having Jurisdiction (AHJ).
4. Record shall list the fire door assembly and include the door number with an itemized list of hardware set components for each door opening and location in the facility.

3.4 ADJUST AND CLEAN

A. Adjust doors for proper operation, free from binding or other defects.

B. Clean and restore soiled surfaces. Remove scraps and debris and leave site in a clean condition.

C. Prime Coat Touch-Up: Immediately after erection, sand smooth rusted or damaged areas of prime coat, and apply touch-up of compatible air-drying primer.

D. Properly clean and apply paint to doors and frames in accordance with HMMA-840 TN01 and ANSI A250.8 appendix B along with Manufactures recommended surface preparation for painting.

3.5 PROTECTION

A. Protect installed products and finished surfaces from damage during construction.

END OF SECTION 081113

SECTION 081416 - FLUSH WOOD DOORS

PART 1 - GENERAL

1.1 SUMMARY

A. Section Includes:

1. Solid-core doors with wood-veneer faces.
2. Factory finishing flush wood doors.
3. Factory fitting flush wood doors to frames and factory machining for hardware.

B. Related Sections:

1. Division 08 Section “Finish Hardware” for door hardware.
2. Division 08 Section "Glazing" for glass view panels in flush wood doors.
3. Division 08 Section 083455 “Wood Bullet Resistant Doors and Frames”.

1.2 SUBMITTALS

A. Product Data: For each type of door indicated. Include details of core and edge construction and trim for openings. Include factory-finishing specifications.

B. Shop Drawings: Indicate location, size, and hand of each door; elevation of each kind of door; construction details not covered in Product Data; location and extent of hardware blocking; and other pertinent data.

1. Indicate dimensions and locations of mortises and holes for hardware.
2. Indicate dimensions and locations of cutouts.
3. Indicate requirements for veneer matching.
4. Indicate doors to be factory finished and finish requirements.
5. Indicate fire-protection ratings for fire-rated doors.

C. Samples for Initial Selection: For factory-finished doors.

D. Samples for Verification:

1. Factory finishes applied to actual door face materials, approximately 8 by 10 inches (200 by 250 mm), for each material and finish. For each wood species and transparent finish, provide set of three samples showing typical range of color and grain to be expected in the finished work.
2. Corner sections of doors, approximately 8 by 10 inches (200 by 250 mm), with door faces and edges representing actual materials to be used.

    a. Provide samples for each species of veneer and solid lumber required.

b. Finish veneer-faced door samples with same materials proposed for factory-finished doors.

3. Frames for light openings, 6 inches (150 mm) long, for each material, type, and finish required.

E. Warranty: Sample of special warranty.

1.3 QUALITY ASSURANCE

A. Source Limitations: Obtain flush wood doors from single manufacturer.

B. Fire-Rated Wood Doors: Doors complying with NFPA 80 that are listed and labeled by a qualified testing agency, for fire-protection ratings indicated, based on testing at positive pressure according to NFPA 252.

1. Temperature-Rise Limit: At vertical exit enclosures and exit passageways, provide doors that have a maximum transmitted temperature end point of not more than 450 deg F (250 deg C) above ambient after 30 minutes of standard fire-test exposure.

1.4 DELIVERY, STORAGE, AND HANDLING

A. Comply with requirements of referenced standard and manufacturer's written instructions.

B. Package doors individually in plastic bags or cardboard cartons.

C. Mark each door on top and bottom rail with opening number used on Shop Drawings.

1.5 PROJECT CONDITIONS

A. Environmental Limitations: Do not deliver or install doors until spaces are enclosed and weathertight, wet work in spaces is complete and dry, and HVAC system is operating and maintaining ambient temperature and humidity conditions at occupancy levels during the remainder of the construction period.

1.6 WARRANTY

A. Special Warranty: Manufacturer's standard form in which manufacturer agrees to repair or replace doors that fail in materials or workmanship within specified warranty period.

1. Failures include, but are not limited to, the following:

a. Warping (bow, cup, or twist) more than 1/4 inch (6.4 mm) in a 42-by-84-inch (1067-by-2134-mm) section.
b. Telegraphing of core construction in face veneers exceeding 0.01 inch in a 3-inch (0.25 mm in a 76.2-mm) span.

2. Warranty shall also include installation and finishing that may be required due to repair or replacement of defective doors.
3. Warranty Period for Solid-Core Interior Doors: Life of installation.

PART 2 - PRODUCTS

2.1 MANUFACTURERS

A. Manufacturers: Subject to compliance with requirements, provide products by one of the following:
1. Masonite Architectural.
2. Oshkosh Door Company.
3. VT Industries, Inc.

2.2 DOOR CONSTRUCTION, GENERAL

A. WDMA I.S.1-A Performance Grade: Extra Heavy Duty.

B. Provide doors with structural-composite-lumber cores instead of particleboard cores for doors indicated to receive exit devices.

C. Structural-Composite-Lumber-Core Doors:

1. Structural Composite Lumber: WDMA I.S.10.

a. Screw Withdrawal, Face: 700 lbf (3100 N).
b. Screw Withdrawal, Edge: 400 lbf (1780 N).

D. Fire-Protection-Rated Doors: Provide core specified or mineral core as needed to provide fire-protection rating indicated.

1. Edge Construction: Provide edge construction with intumescent seals concealed by outer stile. Comply with specified requirements for exposed edges.
2. Pairs: Provide formed-steel edges and astragals with intumescent seals as required by rating.

a. Finish steel edges and astragals with baked enamel same color as doors.

E. Mineral-Core Doors:

1. Core: Noncombustible mineral product complying with requirements of referenced quality standard and testing and inspecting agency for fire-protection rating indicated.
2. Blocking: Provide composite blocking with improved screw-holding capability approved for use in doors of fire-protection ratings indicated as needed to eliminate through-bolting hardware.

3. Edge Construction: At hinge stiles, provide laminated-edge construction with improved screw-holding capability and split resistance. Comply with specified requirements for exposed edges.

   a. Screw-Holding Capability: Minimum 400 lbf (1780 N) per WDMA T.M.-10.

2.3 VENEERED-FACED DOORS FOR TRANSPARENT FINISH

A. Interior Solid-Core Doors:

1. Grade: Premium, with Grade A faces.
2. Species: Walnut.
3. Cut: Plain sliced (flat sliced).
4. Match between Veneer Leaves: Slip match.
5. Assembly of Veneer Leaves on Door Faces: Center-balance match.
6. Pair and Set Match: Provide for doors hung in same opening or separated only by mullions.
7. Exposed Vertical and Top Edges: Same species as faces – edge Type A.
8. Core: Structural composite lumber.
9. Construction: Five plies. Stiles and rails are bonded to core, then entire unit abrasive planed before veneering. Faces are bonded to core using a hot press.
10. WDMA I.S.1-A Performance Grade: Extra Heavy Duty.

2.4 LIGHT FRAMES

A. Wood Beads for Light Openings in Wood Doors: Provide manufacturer's standard wood beads as follows unless otherwise indicated.

1. Wood Species: Same species as door faces.
2. Profile: Manufacturer's standard shape.
3. At wood-core doors with 20-minute fire-protection ratings, provide wood beads and metal glazing clips approved for such use.

B. Metal Frames for Light Openings in Fire-Rated Doors: Manufacturer's standard frame formed of 0.048-inch- (1.2-mm-) thick, cold-rolled steel sheet; factory primed for paint finish; and approved for use in doors of fire-protection rating indicated.

2.5 FABRICATION

A. Factory fit doors to suit frame-opening sizes indicated. Comply with clearance requirements of referenced quality standard for fitting unless otherwise indicated.

1. Comply with requirements in NFPA 80 for fire-rated doors.

B. Factory machine doors for hardware that is not surface applied. Locate hardware to comply with DHI-WDHS-3. Comply with final hardware schedules, door frame Shop Drawings, DHI A115-W series standards, and hardware templates.

1. Coordinate with hardware mortises in metal frames to verify dimensions and alignment before factory machining.
2. Metal Astragals: Factory machine astragals and formed-steel edges for hardware for pairs of fire-rated doors.

C. Openings: Cut and trim openings through doors in factory.

1. Light Openings: Trim openings with moldings of material and profile indicated.
2. Glazing: Factory install glazing in doors indicated to be factory finished. Comply with applicable requirements in Division 08 Section "Glazing."

D. Electrical Raceways: Provide flush wood doors receiving electrified hardware with concealed wiring harness and standardized Molex™ plug connectors on both ends to accommodate up to twelve wires. Coordinate connectors on end of the wiring harness to plug directly into the electrified hardware and the through wire transfer hardware or wiring harness specified in hardware sets in Division 08 "Door Hardware". Wire nut connections are not acceptable.

2.6 FACTORY FINISHING

A. General: Comply with referenced quality standard for factory finishing. Complete fabrication, including fitting doors for openings and machining for hardware that is not surface applied, before finishing.

1. Finish faces, all four edges, edges of cutouts, and mortises. Stains and fillers may be omitted on top and bottom edges, edges of cutouts, and mortises.

B. Finish doors at factory.

C. Finish doors at factory that are indicated to receive transparent finish. Field finish doors indicated to receive opaque finish.

D. Finish doors at factory where indicated in schedules or on Drawings as factory finished.

E. Transparent Finish:

1. Grade: Premium.
2. Finish: WDMA TR-6 catalyzed polyurethane or WDMA TR-8 UV Cured acrylated polyester/urethane.
3. Staining: Match Architects sample.
4. Effect: Semifilled finish, produced by applying an additional finish coat to partially fill the wood pores.
5. Sheen: Satin.

PART 3 - EXECUTION

3.1 EXAMINATION

A. Examine doors and installed door frames before hanging doors.

1. Verify that frames comply with indicated requirements for type, size, location, and swing characteristics and have been installed with level heads and plumb jambs.
2. Reject doors with defects.

B. Proceed with installation only after unsatisfactory conditions have been corrected.

3.2 INSTALLATION

A. Hardware: For installation, see Division 08 Section "Door Hardware."

B. Installation Instructions: Install doors to comply with manufacturer's written instructions and the referenced quality standard, and as indicated.

1. Install fire-rated doors in corresponding fire-rated frames according to NFPA 80.

C. Job-Fitted Doors: Align and fit doors in frames with uniform clearances and bevels as indicated below; do not trim stiles and rails in excess of limits set by manufacturer or permitted for fire-rated doors. Machine doors for hardware. Seal edges of doors, edges of cutouts, and mortises after fitting and machining.

1. Clearances: Provide 1/8 inch (3.2 mm) at heads, jambs, and between pairs of doors. Provide 1/8 inch (3.2 mm) from bottom of door to top of decorative floor finish or covering unless otherwise indicated. Where threshold is shown or scheduled, provide 1/4 inch (6.4 mm) from bottom of door to top of threshold unless otherwise indicated.

   a. Comply with NFPA 80 for fire-rated doors.

2. Bevel non-fire-rated doors 1/8 inch in 2 inches (3-1/2 degrees) at lock and hinge edges.
3. Bevel fire-rated doors 1/8 inch in 2 inches (3-1/2 degrees) at lock edge; trim stiles and rails only to extent permitted by labeling agency.

D. Factory-Fitted Doors: Align in frames for uniform clearance at each edge.

E. Factory-Finished Doors: Restore finish before installation if fitting or machining is required at Project site.

3.3 ADJUSTING

A. Operation: Rehang or replace doors that do not swing or operate freely.

B. Finished Doors: Replace doors that are damaged or that do not comply with requirements. Doors may be repaired or refinished if work complies with requirements and shows no evidence of repair or refinishing.

END OF SECTION 081416

SECTION 083113 - ACCESS DOORS AND FRAMES

PART 1 - GENERAL

1.1 RELATED DOCUMENTS

A. Drawings and general provisions of the Contract, including General and Supplementary Conditions and Division 01 Specification Sections, apply to this Section.

1.2 SUMMARY

A. Section includes access doors and frames for walls and ceilings.

1.3 ACTION SUBMITTALS

A. Product Data: For each type of product.

1. Include construction details, fire ratings, material descriptions, dimensions of individual components and profiles, and finishes.

PART 2 - PRODUCTS

2.1 PERFORMANCE REQUIREMENTS

A. Fire-Rated Access Doors and Frames: Assemblies complying with NFPA 80 that are listed and labeled by a qualified testing agency, for fire-protection ratings indicated, according to NFPA 252 or UL 10B.

B. Flush Access Doors with Concealed Flanges:

1. Manufacturers: Subject to compliance with requirements, provide products by one of the following:

   a. Acudor Products, Inc.
   b. JL Industries, Inc.; a division of the Activar Construction Products Group.
   c. Karp Associates, Inc.
   d. Larsens Manufacturing Company.
   e. Milcor; Commercial Products Group of Hart & Cooley, Inc.
   f. Nystrom, Inc.

2. Description: Face of door flush with frame; with concealed flange for gypsum board installation and concealed hinge.
3. Locations: Wall and ceiling.
4. Door Size: 18” x 18” minimum.

5. Uncoated Steel Sheet for Door: Nominal 0.060 inch (1.52 mm), 16 gage, factory primed.
6. Frame Material: Same material and thickness as door.
7. Latch and Lock: Cam latch, key operated.

C. Fire-Rated, Flush Access Doors with Concealed Flanges:

1. Manufacturers: Subject to compliance with requirements, provide products by one of the following:

   a. Acudor Products, Inc.
   b. JL Industries, Inc.; a division of the Activar Construction Products Group.
   c. Karp Associates, Inc.
   d. Nystrom, Inc.

2. Description: Door face flush with frame, with a core of mineral-fiber insulation enclosed in sheet metal; with concealed flange for gypsum board installation, self-closing door, and concealed hinge.
3. Locations: Wall.
4. Door Size: 18” x 18” minimum.
5. Fire-Resistance Rating: Not less than that indicated.
6. Uncoated Steel Sheet for Door: Nominal 0.036 inch (0.91 mm), 20 gage, factory primed.
7. Frame Material: Same material, thickness, and finish as door.
8. Latch and Lock: Self-closing, self-latching door hardware, operated by key.

D. Flush Access Doors with Exposed Flanges, masonry locations only:
1. Manufacturers: Subject to compliance with requirements, provide products by one of the following:

   a. Acudor Products, Inc.
   b. JL Industries, Inc.; a division of the Activar Construction Products Group.
   c. Karp Associates, Inc.
   d. Nystrom, Inc.
2. Description: Face of door flush with frame, with exposed flange and concealed hinge.
3. Optional Features: Masonry anchors.
4. Locations: Wall.
5. Door Size: 18” x 18” minimum, or as indicated on drawings.
6. Frame Material: Same material, thickness, and finish as door.
7. Latch and Lock: Cam latch, key operated.

2.2 MATERIALS

A. Steel Plates, Shapes, and Bars: ASTM A 36/A 36M.

B. Steel Sheet: Uncoated or electrolytic zinc coated, ASTM A 879/A 879M, with cold-rolled steel sheet substrate complying with ASTM A 1008/A 1008M, Commercial Steel (CS), exposed.

C. Frame Anchors: Same material as door face.

D. Inserts, Bolts, and Anchor Fasteners: Hot-dip galvanized steel according to ASTM A 153/A 153M or ASTM F 2329.

2.3 FABRICATION

A. General: Provide access door and frame assemblies manufactured as integral units ready for installation.

B. Metal Surfaces: For metal surfaces exposed to view in the completed Work, provide materials with smooth, flat surfaces without blemishes. Do not use materials with exposed pitting, seam marks, roller marks, rolled trade names, or roughness.

C. Doors and Frames: Grind exposed welds smooth and flush with adjacent surfaces. Furnish mounting holes, attachment devices and fasteners of type required to secure access doors to types of supports indicated.

1. For concealed flanges with drywall bead, provide edge trim for gypsum panels securely attached to perimeter of frames.
2. For concealed flanges with plaster bead for full-bed plaster applications, provide zinc-coated expanded-metal lath and exposed casing bead welded to perimeter of frames.

D. Latch and Lock Hardware:

1. Quantity: Furnish number of latches and locks required to hold doors tightly closed.
2. Keys: Furnish two keys per lock and key all locks alike.

2.4 FINISHES

A. Comply with NAAMM's "Metal Finishes Manual for Architectural and Metal Products" for recommendations for applying and designating finishes.

B. Protect mechanical finishes on exposed surfaces from damage by applying a strippable, temporary protective covering before shipping.

C. Appearance of Finished Work: Noticeable variations in same piece are not acceptable. Variations in appearance of adjoining components are acceptable if they are within the range of approved Samples and are assembled or installed to minimize contrast.

D. Painted Finishes: Comply with coating manufacturer's written instructions for cleaning, conversion coating, and applying and baking finish.

1. Factory Primed: Apply manufacturer's standard, lead- and chromate-free, universal primer immediately after surface preparation and pretreatment.

PART 3 - EXECUTION

3.1 EXAMINATION

A. Examine substrates for compliance with requirements for installation tolerances and other conditions affecting performance of the Work.

B. Proceed with installation only after unsatisfactory conditions have been corrected.

3.2 INSTALLATION

A. Comply with manufacturer's written instructions for installing access doors and frames.

3.3 ADJUSTING

A. Adjust doors and hardware, after installation, for proper operation.

END OF SECTION 083113

SECTION 084113 - ALUMINUM-FRAMED ENTRANCES AND STOREFRONTS

PART 1 - GENERAL

1.1 SUMMARY

A. Section Includes:

1. Aluminum-framed storefront systems.
2. Aluminum-framed entrance door systems.

B. Related Requirements:
1. Section 087100 “Door Hardware” for entrance door hardware.
2. Section 088000 “Glazing” for glass types.

1.2 PREINSTALLATION MEETINGS

A. Preinstallation Conference: Conduct conference at Project site.

1.3 ACTION SUBMITTALS

A. Product Data: For each type of product.

1. Include construction details, material descriptions, dimensions of individual components and profiles, and finishes.

B. Shop Drawings: For aluminum-framed entrances and storefronts. Include plans, elevations, sections, full-size details, and attachments to other work.

1. Include details of provisions for assembly expansion and contraction and for draining moisture occurring within the assembly to the exterior.
2. Include full-size isometric details of each type of vertical-to-horizontal intersection of aluminum-framed entrances and storefronts, showing the following:

a. Joinery, including concealed welds.
b. Anchorage.
c. Expansion provisions.
d. Glazing.
e. Flashing and drainage.

3. Show connection to and continuity with adjacent thermal, weather, air, and vapor barriers.
4. Include point-to-point wiring diagrams showing the following:

a. Power requirements for each electrically operated door hardware.

b. Location and types of switches, signal device, conduit sizes, and number and size of wires.

C. Samples for Initial Selection: For units with factory-applied color finishes.

D. Fabrication Sample: Of each vertical-to-horizontal intersection of assemblies, made from 12-inch (300-mm) lengths of full-size components and showing details of the following:

1. Joinery, including concealed welds.
2. Anchorage.
3. Expansion provisions.
4. Glazing.
5. Flashing and drainage.

E. Entrance Door Hardware Schedule: Prepared by or under supervision of supplier, detailing fabrication and assembly of entrance door hardware, as well as procedures and diagrams. Coordinate final entrance door hardware schedule with doors, frames, and related work to ensure proper size, thickness, hand, function, and finish of entrance door hardware.

F. Delegated Design Submittal: For aluminum-framed entrances and storefronts including analysis data signed and sealed by the qualified professional engineer responsible for their preparation.

1.4 INFORMATIONAL SUBMITTALS

A. Certificates:

1. Energy Performance Certificates: For aluminum-framed entrances and storefronts, accessories, and components, from manufacturer.

a. Basis for Certification: NFRC-certified energy performance values for each aluminum-framed entrance and storefront.

B. Test and Evaluation Reports:

1. Product Test Reports: For aluminum-framed entrances and storefronts, for tests performed by qualified testing agency.

C. Field Quality-Control Submittals:

1. Field quality-control reports.

D. Quality-Control Program: Developed specifically for Project, including fabrication and installation, in accordance with recommendations in ASTM C1401. Include periodic quality-control reports.

E. Sample warranties.

1.5 CLOSEOUT SUBMITTALS

A. Operation and Maintenance Data: For aluminum-framed entrances and storefronts.

1.6 QUALITY ASSURANCE

A. Qualifications:

1. Installers: An entity that employs installers and supervisors who are trained and approved by manufacturer and that employs a qualified glazing contractor for this Project who is certified under the North American Contractor Certification Program (NACC) for Architectural Glass & Metal (AG&M) contractors.
2. Delegated Design Engineer: A professional engineer who is legally qualified to practice in Virginia where Project is located and who is experienced in providing engineering services of the type indicated.

B. Product Options: Information on Drawings and in Specifications establishes requirements for aesthetic effects and performance characteristics of assemblies. Aesthetic effects are indicated by dimensions, arrangements, alignment, and profiles of components and assemblies as they relate to sightlines, to one another, and to adjoining construction.

1. Do not change intended aesthetic effects, as judged solely by Architect, except with Architect's approval. If changes are proposed, submit comprehensive explanatory data to Architect for review.

1.7 WARRANTY

A. Special Warranty: Manufacturer agrees to repair or replace components of aluminum-framed entrances and storefronts that do not comply with requirements or that fail in materials or workmanship within specified warranty period.

1. Failures include, but are not limited to, the following:

a. Structural failures, including, but not limited to, excessive deflection.
b. Noise or vibration created by wind and thermal and structural movements.
c. Deterioration of metals, metal finishes, and other materials beyond normal weathering.
d. Water penetration through fixed glazing and framing areas.
e. Failure of operating components.

2. Warranty Period: Two years from date of Substantial Completion.

B. Special Finish Warranty, Factory-Applied Finishes: Standard form in which manufacturer agrees to repair finishes or replace aluminum that shows evidence of deterioration of factory-applied finishes within specified warranty period.

1. Deterioration includes, but is not limited to, the following:

a. Color fading more than 5 Delta E units when tested in accordance with ASTM D2244.
b. Chalking in excess of a No. 8 rating when tested in accordance with ASTM D4214.
c. Cracking, checking, peeling, or failure of paint to adhere to bare metal.

2. Warranty Period: 10 years from date of Substantial Completion.

PART 2 - PRODUCTS

2.1 MANUFACTURERS

A. Source Limitations: Obtain all components of aluminum-framed entrance and storefront system, including framing, spandrel panels, and accessories, from single manufacturer.

2.2 PERFORMANCE REQUIREMENTS

A. Delegated Design: Engage a qualified professional engineer, as defined in Section 014000 "Quality Requirements," to design aluminum-framed entrances and storefronts.

B. General Performance: Comply with performance requirements specified, as determined by testing of aluminum-framed entrances and storefronts representing those indicated for this Project without failure due to defective manufacture, fabrication, installation, or other defects in construction.

1. Aluminum-framed entrances and storefronts shall withstand movements of supporting structure, including, but not limited to, twist, column shortening, long-term creep, and deflection from uniformly distributed and concentrated live loads.
2. Failure also includes the following:

a. Thermal stresses transferring to building structure.
b. Glass breakage.
c. Noise or vibration created by wind and thermal and structural movements.
d. Loosening or weakening of fasteners, attachments, and other components.
e. Failure of operating units.

C. Structural Loads:

1. Wind Loads: As indicated on Drawings.
2. Other Design Loads: As indicated on Drawings.

D. Deflection of Framing Members Supporting Glass: At design wind load, as follows:

1. Deflection Normal to Wall Plane: Limited to 1/175 of clear span for spans of up to 13 feet 6 inches (4.1 m) and to 1/240 of clear span plus 1/4 inch (6.35 mm) for spans greater than 13 feet 6 inches (4.1 m).

2. Deflection Parallel to Glazing Plane: Limited to amount not exceeding that which reduces glazing bite to less than 75 percent of design dimension and that which reduces edge clearance between framing members and glazing or other fixed components to less than 1/8 inch (3.2 mm).

    a. Operable Units: Provide a minimum 1/16-inch (1.6-mm) clearance between framing members and operable units.

3. Cantilever Deflection: Limited to 2L/175 at unsupported cantilevers.

E. Structural: Test in accordance with ASTM E330/E330M as follows:

1. When tested at positive and negative wind-load design pressures, storefront assemblies, including entrance doors, do not evidence deflection exceeding specified limits.
2. When tested at 150 percent of positive and negative wind-load design pressures, storefront assemblies, including entrance doors and anchorage, do not evidence material failures, structural distress, or permanent deformation of main framing members exceeding 0.2 percent of span.
3. Test Durations: As required by design wind velocity, but not less than 10 seconds.

F. Water Penetration under Static Pressure: Test in accordance with ASTM E331 as follows:

1. No evidence of water penetration through fixed glazing and framing areas, including entrance doors, when tested in accordance with a minimum static-air-pressure differential of 20 percent of positive wind-load design pressure, but not less than 10 lbf/sq. ft. (480 Pa).

G. Water Penetration under Dynamic Pressure: Test in accordance with AAMA 501.1 as follows:

1. No evidence of water penetration through fixed glazing and framing areas when tested at dynamic pressure equal to 20 percent of positive wind-load design pressure, but not less than 10 lbf/sq. ft. (480 Pa).
2. Maximum Water Leakage: No uncontrolled water penetrating assemblies or water appearing on assemblies' normally exposed interior surfaces from sources other than condensation. Water leakage does not include water controlled by flashing and gutters, or water that is drained to exterior.

H. Energy Performance: Certified and labeled by manufacturer for energy performance as follows:

1. Thermal Transmittance (U-factor):

    a. Fixed Glazing and Framing Areas: U-factor for the system of not more than 0.38 Btu/sq. ft. x h x deg F (2.33 W/sq. m x K) as determined in accordance with NFRC 100.
    b. Entrance Doors: U-factor of not more than 0.77 Btu/sq. ft. x h x deg F (4.37 W/sq. m x K) as determined in accordance with NFRC 100.

2. Air Leakage:

a. Fixed Glazing and Framing Areas: Air leakage for the system of not more than 0.06 cfm/sq. ft. (0.30 L/s per sq. m) at a static-air-pressure differential of 6.24 lbf/sq. ft. (300 Pa) when tested in accordance with ASTM E283.
b. Entrance Doors: Air leakage of not more than 1.0 cfm/sq. ft. (5.08 L/s per sq. m) at a static-air-pressure differential of 1.57 lbf/sq. ft. (75 Pa).

3. Condensation Resistance Factor (CRF):

a. Fixed Glazing and Framing Areas: CRF for the system of not less than 60 as determined in accordance with AAMA 1503.
b. Entrance Doors: CRF of not less than 57 as determined in accordance with AAMA 1503.

I. Thermal Movements: Allow for thermal movements resulting from ambient and surface temperature changes.

1. Temperature Change: 120 deg F (67 deg C), ambient; 180 deg F (100 deg C), material surfaces.
2. Thermal Cycling: No buckling; stress on glass; sealant failure; excess stress on framing, anchors, and fasteners; or reduction of performance when tested in accordance with AAMA 501.5.

a. High Exterior Ambient-Air Temperature: That which produces an exterior metal-surface temperature of 180 deg F (82 deg C).
b. Low Exterior Ambient-Air Temperature: 0 deg F (minus 18 deg C).
c. Interior Ambient-Air Temperature: 75 deg F (24 deg C).

2.3 STOREFRONT SYSTEMS

A. Basis-of-Design Product: Subject to compliance with requirements, provide Kawneer Company, Inc.; Arconic Corporation; VersaGlaze 451T or a comparable product by one of the following:
1. EFCO; Xtherm Series 403X.
2. Kawneer Company, Inc.; Arconic Corporation; VersaGlaze 451T.
3. Oldcastle BuildingEnvelope (OBE); CRH Americas, Inc.; Series 3000 Thermal MultiPlane.
4. Pittco Architectural Metals, Inc.; TMS 114XT.
5. YKK AP America Inc.; YES 45 TU.

B. Framing Members: Manufacturer's extruded- or formed-aluminum framing members of thickness required and reinforced as required to support imposed loads.

1. Exterior Framing Construction: Thermally broken.
2. Interior Vestibule Framing Construction: Nonthermal.
3. Glazing System - Exterior: Retained mechanically with gaskets on four sides.
4. Glazing System - Interior: Retained mechanically with gaskets on four sides; and Two sided butt glazing with silicone sealant joint.
5. Glazing Plane: Front or center.
6. Finish: Color anodic finish.
7. Fabrication Method: Field-fabricated stick system.

8. Profile: 2 in x 4.5 in; or as indicated.
9. Aluminum: Alloy and temper recommended by manufacturer for type of use and finish indicated.
10. Steel Reinforcement: As required by manufacturer.

C. Backer Plates: Manufacturer's standard, continuous backer plates for framing members, if not integral, where framing abuts adjacent construction.

D. Subsill: Manufacturer's standard.

E. Brackets and Reinforcements: Manufacturer's standard high-strength aluminum with nonstaining, nonferrous shims for aligning system components.

2.4 ENTRANCE DOOR SYSTEMS

A. Products: Subject to compliance with requirements, provide one of the following:
1. EFCO;
2. Kawneer Company, Inc.; Arconic Corporation;.
3. Oldcastle BuildingEnvelope (OBE); CRH Americas, Inc.; ArmorDefend.
4. Pittco Architectural Metals, Inc.;.
5. YKK AP America Inc.;.

B. Entrance Doors: Manufacturer's standard glazed entrance doors for manual-swing or automatic operation.

1. Door Construction: 2-inch (50.8-mm) overall thickness, with minimum 0.188-inch- (4.8-mm-) thick, extruded-aluminum tubular rail and stile members. Mechanically fasten corners with reinforcing brackets that are deeply penetrated and fillet welded or that incorporate concealed tie rods.

   a. Thermal Construction: High-performance plastic connectors separate aluminum members exposed to the exterior from members exposed to the interior.

2. Door Design: As indicated Wide stile; 5-inch (127-mm) nominal width.
3. Glazing Stops and Gaskets: Beveled, snap-on, extruded-aluminum stops and preformed gaskets.

   a. Provide nonremovable glazing stops on outside of door.

4. Finish: Match adjacent storefront framing finish.

2.5 ENTRANCE DOOR HARDWARE

A. Entrance Door Hardware: As specified in Section 087100 "Door Hardware."
1. Sequence of Operation: Provide electrified door hardware function, sequence of operation, and interface with other building control systems indicated.
2. Opening-Force Requirements:

a. Egress Doors: Not more than 15 lbf (67 N) to release the latch and not more than 30 lbf (133 N) to set the door in motion and not more than 15 lbf (67 N) to open the door to its minimum required width.
b. Accessible Interior Doors: Not more than 5 lbf (22.2 N) to fully open door.

2.6 GLAZING

A. Glazing: Comply with Section 088000 "Glazing."

B. Glazing Gaskets: Manufacturer's standard sealed-corner pressure-glazing system of black, resilient elastomeric glazing gaskets, setting blocks, and shims or spacers.

C. Glazing Sealants: As recommended by manufacturer.

1. Verify sealant has a VOC content of 250 g/L or less.

D. Weatherseal Sealants: chemically curing silicone formulation that is compatible with structural sealant and other system components with which it comes in contact; recommended by structural-sealant, weatherseal-sealant, and structural-sealant-glazed storefront manufacturers for this use.

1. Silicone, S, NS, 50, NT: Single-component, field tintable, nonsag, plus 50 percent and minus 50 percent movement capability, nontraffic-use, neutral-curing silicone joint sealant; ASTM C 920, Type S, Grade NS, Class 50, Use NT.
   a. Products: Subject to compliance with requirements, available products that may be incorporated into the Work include, but are not limited to the following:
      1) Dow Corning Corporation; Dow Corning® 791 Silicone Weatherproofing Sealant (Provide custom colors).
      2) GE Construction Sealants; Momentive Performance Materials Inc.; SCS9000 SilPruf NB (Provide custom colors).
      3) Pecora Corporation; 890FTS (Tintable)
      4) Sika Corporation; Joint Sealants; Sikasil WS-295 FPS (Tintable).
2. **Use of a single component silicone is acceptable if there is an acceptable color, from one of the manufacturers listed above. If not, contractor must use a tintable or custom color as listed in paragraph 2.6.D.**

3. Color: As selected by Architect.

2.7 MATERIALS

A. Sheet and Plate: ASTM B209 (ASTM B209M).

B. Extruded Bars, Rods, Profiles, and Tubes: ASTM B221 (ASTM B221M).

C. Structural Profiles: ASTM B308/B308M.

D. Steel Reinforcement:

1. Structural Shapes, Plates, and Bars: ASTM A36/A36M.

2. Cold-Rolled Sheet and Strip: ASTM A1008/A1008M.
3. Hot-Rolled Sheet and Strip: ASTM A1011/A1011M.

E. Steel Reinforcement Primer: Manufacturer's standard zinc-rich, corrosion-resistant primer complying with SSPC-PS Guide No. 12.00; applied immediately after surface preparation and pretreatment. Select surface preparation methods in accordance with recommendations in SSPC-SP COM, and prepare surfaces in accordance with applicable SSPC standard.

2.8 ACCESSORIES

A. Fasteners and Accessories: Manufacturer's standard corrosion-resistant, nonstaining, nonbleeding fasteners and accessories compatible with adjacent materials.

1. Use self-locking devices where fasteners are subject to loosening or turning out from thermal and structural movements, wind loads, or vibration.
2. Reinforce members as required to receive fastener threads.
3. Use exposed fasteners with countersunk Phillips screw heads, finished to match framing system.

B. Anchors: Three-way adjustable anchors with minimum adjustment of 1 inch (25.4 mm) that accommodate fabrication and installation tolerances in material and finish compatible with adjoining materials and recommended by manufacturer.

1. Concrete and Masonry Inserts: Hot-dip galvanized cast-iron, malleable-iron, or steel inserts complying with ASTM A123/A123M or ASTM A153/A153M requirements.

C. Concealed Flashing: Manufacturer's standard corrosion-resistant, nonstaining, nonbleeding flashing compatible with adjacent materials.

D. Bituminous Paint: Cold-applied asphalt-mastic paint containing no asbestos, formulated for 30-mil (0.762-mm) thickness per coat.

E. Rigid PVC filler.

2.9 FABRICATION

A. Form or extrude aluminum shapes before finishing.

B. Weld in concealed locations to greatest extent possible to minimize distortion or discoloration of finish. Remove weld spatter and welding oxides from exposed surfaces by descaling or grinding.

C. Fabricate components that, when assembled, have the following characteristics:

1. Profiles that are sharp, straight, and free of defects or deformations.
2. Accurately fitted joints with ends coped or mitered.
3. Physical and thermal isolation of glazing from framing members.

4. Accommodations for thermal and mechanical movements of glazing and framing to maintain required glazing edge clearances.
5. Provisions for field replacement of glazing from interior for vision glass and exterior for spandrel glazing or metal panels.
6. Fasteners, anchors, and connection devices that are concealed from view to greatest extent possible.

D. Mechanically Glazed Framing Members: Fabricate for flush glazing without projecting stops.

E. Storefront Framing: Fabricate components for assembly using shear-block system or screw-spline system.

F. Entrance Door Frames: Reinforce as required to support loads imposed by door operation and for installing entrance door hardware.

1. At interior and exterior doors, provide compression weather stripping at fixed stops.

G. Entrance Doors: Reinforce doors as required for installing entrance door hardware.

1. At pairs of exterior doors, provide sliding-type weather stripping retained in adjustable strip and mortised into door edge.
2. At exterior doors, provide weather sweeps applied to door bottoms.

H. Entrance Door Hardware Installation: Factory install entrance door hardware to the greatest extent possible. Cut, drill, and tap for factory-installed entrance door hardware before applying finishes.

I. After fabrication, clearly mark components to identify their locations in Project in accordance with Shop Drawings.

2.10 ALUMINUM FINISHES

A. Color Anodic Finish (Exterior/Thermally broken units): AAMA 611, AA-M12C22A42, Class I, 0.018 mm or thicker.

B. Clear Anodic Finish (Interior/Non-Thermal units): AAMA 611, AA-M12C22A41, Class I, 0.018 mm

2.11 SOURCE QUALITY CONTROL

A. Structural Sealant: Perform quality-control procedures complying with ASTM C1401 recommendations, including, but not limited to, assembly material qualification procedures, sealant testing, and assembly fabrication reviews and checks.

PART 3 - EXECUTION

3.1 EXAMINATION

A. Examine areas, with Installer present, for compliance with requirements for installation tolerances and other conditions affecting performance of the Work.

B. Proceed with installation only after unsatisfactory conditions have been corrected.

3.2 INSTALLATION, GENERAL

A. Comply with manufacturer's written instructions.

B. Do not install damaged components.

C. Fit joints to produce hairline joints free of burrs and distortion.

D. Rigidly secure nonmovement joints.

E. Install anchors with separators and isolators to prevent metal corrosion and electrolytic deterioration and to prevent impeding movement of moving joints.

F. Seal perimeter and other joints watertight unless otherwise indicated.

G. Metal Protection:

1. Where aluminum is in contact with dissimilar metals, protect against galvanic action by painting contact surfaces with materials recommended by manufacturer for this purpose or by installing nonconductive spacers.
2. Where aluminum is in contact with concrete or masonry, protect against corrosion by painting contact surfaces with bituminous paint.

H. Set continuous sill members and flashing in full sealant bed, as specified in Section 079200 "Joint Sealants," to produce weathertight installation.

I. Install joint filler behind sealant as recommended by sealant manufacturer.

J. Install components plumb and true in alignment with established lines and grades.

3.3 INSTALLATION OF GLAZING

A. Install glazing as specified in Section 088000 "Glazing."

3.4 INSTALLATION OF WEATHERSEAL SEALANT

A. After structural sealant has completely cured, remove temporary retainers and insert backer rod between lites of glass as recommended by sealant manufacturer.

B. Install weatherseal sealant to completely fill cavity, in accordance with sealant manufacturer's written instructions, to produce weatherproof joints.

3.5 INSTALLATION OF ALUMINUM-FRAMED ENTRANCE DOORS

A. Install entrance doors to produce smooth operation and tight fit at contact points.

1. Exterior Doors: Install to produce weathertight enclosure and tight fit at weather stripping.
2. Field-Installed Entrance Door Hardware: Install surface-mounted entrance door hardware in accordance with entrance door hardware manufacturers' written instructions using concealed fasteners to greatest extent possible.

3.6 ERECTION TOLERANCES

A. Install aluminum-framed entrances and storefronts to comply with the following maximum tolerances:

1. Plumb: 1/8 inch in 10 feet (3.2 mm in 3 m); 1/4 inch in 40 feet (6.35 mm in 12.2 m).
2. Level: 1/8 inch in 20 feet (3.2 mm in 6 m); 1/4 inch in 40 feet (6.35 mm in 12.2 m).
3. Alignment:

   a. Where surfaces abut in line or are separated by reveal or protruding element up to 1/2 inch (12.7 mm) wide, limit offset from true alignment to 1/16 inch (1.6 mm).
   b. Where surfaces are separated by reveal or protruding element from 1/2 to 1 inch (12.7 to 25.4 mm) wide, limit offset from true alignment to 1/8 inch (3.2 mm).
   c. Where surfaces are separated by reveal or protruding element of 1 inch (25.4 mm) wide or more, limit offset from true alignment to 1/4 inch (6 mm).

4. Location: Limit variation from plane to 1/8 inch in 12 feet (3.2 mm in 3.6 m); 1/2 inch (12.7 mm) over total length.

3.7 MAINTENANCE SERVICE

A. Entrance Door Hardware Maintenance:

1. Maintenance Tools and Instructions: Furnish a complete set of specialized tools and maintenance instructions as needed for Owner's continued adjustment, maintenance, and removal and replacement of entrance door hardware.
2. Initial Maintenance Service: Beginning at Substantial Completion, provide six months' full maintenance by skilled employees of entrance door hardware Installer. Include quarterly preventive maintenance, repair or replacement of worn or defective components, lubrication, cleaning, and adjusting as required for proper entrance door hardware operation at rated speed and capacity. Use parts and supplies that are the same as those used in the manufacture and installation of original equipment.

END OF SECTION 084113

SECTION 08 71 00 - DOOR HARDWARE

PART 1 GENERAL

1.01 SECTION INCLUDES

A. Hardware for wood, aluminum, and hollow metal doors.

B. Hardware for fire-rated doors.

C. Electrically operated and controlled hardware.

D. Thresholds.

E. Weatherstripping and gasketing.

1.02 RELATED REQUIREMENTS

A. Section 06 20 00 - Finish Carpentry: Wood door frames.

B. Section 07 92 00 - Joint Sealants: Sealants for setting exterior door thresholds.

C. Section 08 11 13 - Hollow Metal Doors and Frames.

D. Section 08 11 16 - Aluminum Doors and Frames.

E. Section 08 12 13 - Hollow Metal Frames.

F. Section 08 14 16 - Flush Wood Doors.

G. Section 28 10 00 - Access Control: Electronic access control devices.

1.03 REFERENCE STANDARDS

A. ADA Standards - 2010 ADA Standards for Accessible Design; 2010.

B. ASTM E283/E283M - Standard Test Method for Determining Rate of Air Leakage Through Exterior Windows, Skylights, Curtain Walls, and Doors Under Specified Pressure Differences Across the Specimen; 2019.

C. BHMA A156.1 - Standard for Butts and Hinges; 2021.

D. BHMA A156.2 - Bored and Preassembled Locks and Latches; 2022.

E. BHMA A156.3 - Exit Devices; 2020.

F. BHMA A156.4 - Door Controls - Closers; 2019.

G. BHMA A156.5 - Cylinders and Input Devices for Locks; 2020.

H. BHMA A156.6 - Standard for Architectural Door Trim; 2021.

I. BHMA A156.7 - Template Hinge Dimensions; 2016.

J. BHMA A156.16 - Auxiliary Hardware; 2018.

K. BHMA A156.18 - Materials and Finishes; 2020.

L. BHMA A156.21 - Thresholds; 2019.

M. BHMA A156.22 - Standard for Gasketing; 2021.

N. BHMA A156.25 - Electrified Locking Devices; 2023.

O. BHMA A156.26 - Standard for Continuous Hinges; 2021.

P. BHMA A156.28 - Standard for Recommended Practices for Mechanical Keying Systems; 2018.

Q. BHMA A156.115 - Hardware Preparation in Steel Doors and Steel Frames; 2016.

R. BHMA A156.115W - Hardware Preparation in Wood Doors with Wood or Steel Frames; 2006.

S. DHI (H&S) - Sequence and Format for the Hardware Schedule; 2019.

T. DHI (KSN) - Keying Systems and Nomenclature; 2019.

U. DHI (LOCS) - Recommended Locations for Architectural Hardware for Standard Steel Doors and Frames; 2004.

V. DHI WDHS.3 - Recommended Locations for Architectural Hardware for Flush Wood Doors; 1993; also, in WDHS-1/WDHS-5 Series, 1996.

W. ICC (IBC) - International Building Code; Most Recent Edition Adopted by Authority Having Jurisdiction, Including All Applicable Amendments and Supplements.

X. ICC A117.1 - Accessible and Usable Buildings and Facilities; 2017.

Y. ISO 9001 - Quality Management Systems — Requirements; 2015.

Z. ITS (DIR) - Directory of Listed Products; Current Edition.

AA. NFPA 70 - National Electrical Code; Most Recent Edition Adopted by Authority Having Jurisdiction, Including All Applicable Amendments and Supplements.

BB. NFPA 80 - Standard for Fire Doors and Other Opening Protectives; 2022.

CC. NFPA 101 - Life Safety Code; Most Recent Edition Adopted by Authority Having Jurisdiction, Including All Applicable Amendments and Supplements.

DD. NFPA 252 - Standard Methods of Fire Tests of Door Assemblies; 2022.

EE. UL (DIR) - Online Certifications Directory; Current Edition.

FF. UL 10C - Standard for Positive Pressure Fire Tests of Door Assemblies; Current Edition, Including All Revisions.

GG. UL 294 - Access Control System Units; Current Edition, Including All Revisions.

1.04 ADMINISTRATIVE REQUIREMENTS

A. Coordinate the manufacture, fabrication, and installation of products that door hardware is installed on.

B. Sequence installation to ensure facility services connections are achieved in an orderly and expeditious manner.

C. Preinstallation Meeting: Convene a preinstallation meeting one week prior to commencing work of this section; require attendance by affected installers and the following:
   1. Architect.
   2. Hardware Installer.

D. Furnish templates for door and frame preparation to manufacturers and fabricators of products requiring internal reinforcement for door hardware.

E. Keying Requirements Meeting:
   1. Attendance Required:
      a. Contractor.
      b. Owner.
      c. Installer's Architectural Hardware Consultant (AHC).

    d. Manufacturer Representative / Key System Specialist.
2. Agenda:
    a. Establish keying requirements.
    b. Verify locksets and locking hardware are functionally correct for project requirements.
    c. Verify that keying and programming complies with project requirements.
    d. Establish keying submittal schedule and update requirements.
3. Incorporate "Keying Requirements Meeting" decisions into keying submittal upon review of door hardware keying system including, but not limited to, the following:
    a. Access control requirements.
    b. Flow of traffic and extent of security required.
4. Record minutes and distribute copies within two days after meeting to participants, with two copies to Architect, Owner, participants, and those affected by decisions made.
5. Deliver established keying requirements to manufacturers.

1.05 SUBMITTALS

A. See Section 01 30 00 - Administrative Requirements for submittal procedures.

B. Product Data: Manufacturer's catalog literature for each type of hardware, marked to clearly show products to be furnished for this project, and includes construction details, material descriptions, finishes, and dimensions and profiles of individual components.

C. Shop Drawings - Door Hardware Schedule: A detailed listing that includes each item of hardware to be installed on each door.
    1. Prepared by or under supervision of Architectural Hardware Consultant (AHC).
    2. Comply with DHI (H&S) using door numbering scheme and hardware set numbers as indicated in Contract Documents.
        a. Submit in vertical format.
    3. Include complete description for each door listed.

D. Shop Drawings - Electrified Door Hardware: Include diagrams for power, signal, and control wiring for electrified door hardware that include details of interface with building safety and security systems. Provide elevations and diagrams for each electrified door opening as follows:
    1. Prepared by or under supervision of Architectural Hardware Consultant (AHC).
    2. Elevations: Include front and back elevations of each door opening showing electrified devices with connections installed and an operations narrative describing how opening operates from either side at any given time.

E. Manufacturer's Installation Instructions: Indicate special procedures and perimeter conditions requiring special attention.

F. Manufacturer's qualification statement.

G. Installer's qualification statement.

H. Supplier's qualification statement.

I. Maintenance Data: Include data on operating hardware, lubrication requirements, and inspection procedures related to preventative maintenance.

J. Keying Schedule:
    1. Submit three (3) copies of Keying Schedule in compliance with requirements established during Keying Requirements Meeting unless otherwise indicated.

K. Warranty: Submit manufacturer's warranty and ensure that forms have been completed in Owner's name and registered with manufacturer.

L. Project Record Documents: Record actual locations of concealed equipment, services, and conduit.

M. Maintenance Materials and Tools: Furnish the following for Owner's use in maintenance of project.
   1. See Section 01 60 00 - Product Requirements, for additional provisions.

1.06 QUALITY ASSURANCE

A. Standards for Fire-Rated Doors: Maintain one copy of each referenced standard on site, for use by Architect and Contractor.

B. Manufacturer Qualifications: Company specializing in manufacturing products specified in this section with minimum five years of documented experience.

C. Installer Qualifications: Company specializing in performing work of the type specified for commercial door hardware with at least five years of documented experience.

D. Supplier Qualifications: Company with certified Architectural Hardware Consultant (AHC) to assist in work of this section.

1.07 DELIVERY, STORAGE, AND HANDLING

A. Package hardware items individually; label and identify each package with door opening code to match door hardware schedule.

1.08 WARRANTY

A. See Section 01 78 00 - Closeout Submittals for additional warranty requirements.

B. Manufacturer Warranty: Provide manufacturer warranty against defects in material and workmanship for period indicated, from Date of Substantial Completion. Complete forms in Owner's name and register with manufacturer.
   1. Closers: Thirty years, minimum.
   2. Exit Devices: Three years, minimum.
   3. Locksets and Cylinders: Five years, minimum.

PART 2 PRODUCTS

2.01 GENERAL REQUIREMENTS

A. Provide specified door hardware as required to make doors fully functional, compliant with applicable codes, and secure to extent indicated.

B. Provide individual items of single type, of same model, and by same manufacturer.

C. Locks: Provide a lock for each door, unless it is indicated that lock is not required.
   1. Lock Function: Provide lock and latch function numbers and descriptions of manufacturer's Series. As indicated in hardware sets.
   2. Trim: Provide lever handle or pull trim on outside of each lock, unless otherwise indicated.
   3. Strikes:
      a. Finish: To match lock or latch.
      b. Curved-Lip Strikes: Provide as standard, with extended lip to protect frame, unless otherwise indicated.

c. Center Strike At Pairs of Doors: 7/8 inch lip, where indicated in hardware sets.

D. Door Pulls and Push Plates:
1. Provide door pulls and push plates on doors without a lockset, latch set, exit device, or auxiliary lock unless otherwise indicated.
2. On solid doors, provide matching door pull and push plate on opposite faces.

E. Closers:
1. Provide door closer on each exterior door, unless otherwise indicated.
2. Provide door closer on each fire-rated and smoke-rated door.
3. Spring hinges are not an acceptable self-closing device, unless otherwise indicated.

F. Drip Guards: Provide at head of out swinging exterior doors unless protected by roof or canopy directly overhead.

G. Thresholds:
1. Exterior Applications: Provide at each exterior door, unless otherwise indicated.

H. Weatherstripping and Gasketing:
1. Provide weatherstripping on each exterior door at head, jambs, and meeting stiles of door pairs, unless otherwise indicated.
2. Provide door bottom sweep on each exterior door, unless otherwise indicated.

I. Electrically Operated and/or Controlled Hardware: Provide necessary power supplies, power transfer hinges, relays, and interfaces as required for proper operation; provide wiring between hardware and control components and to building power connection in compliance with NFPA 70.

J. See Section 28 10 00 for additional access control system requirements.

K. Fasteners:
1. Provide fasteners of proper type, size, quantity, and finish that comply with commercially recognized standards for proposed applications.
a. Aluminum fasteners are not permitted.
b. Provide Phillips flat-head screws with heads finished to match door surface hardware unless otherwise indicated.
2. Provide machine screws for attachment to reinforced hollow metal and aluminum frames.
a. Self-drilling (Tek) type screws are not permitted.
3. Provide stainless steel machine screws and lead expansion shields for concrete and masonry substrates.
4. Provide wall grip inserts for hollow wall construction.
5. Fire-Resistance-Rated Applications: Comply with NFPA 80.
a. Provide wood or machine screws for hinges mortised to doors or frames, strike plates to frames, and closers to doors and frames.
b. Provide steel through bolts for attachment of surface mounted closers, hinges, or exit devices to door panels unless proper door blocking is provided.

2.02 PERFORMANCE REQUIREMENTS

A. Provide door hardware products that comply with the following requirements:
1. Applicable provisions of federal, state, and local codes.
2. Accessibility: ADA Standards and ICC A117.1.

3. Fire-Resistance-Rated Doors: NFPA 80, listed and labeled by qualified testing agency for fire protection ratings indicated, based on testing at positive pressure in accordance with NFPA 252 or UL 10C.
4. Hardware on Fire-Resistance-Rated Doors: Listed and classified by UL (DIR) or ITS (DIR) as suitable for application indicated.
5. Hardware Preparation for Steel Doors and Steel Frames: BHMA A156.115.
6. Hardware Preparation for Wood Doors with Wood or Steel Frames: BHMA A156.115W.
7. Products Requiring Electrical Connection: Listed and classified by UL (DIR) as suitable for the purpose specified.

2.03 HINGES

A. Manufacturers:
   1. BEST

B. Properties:
   1. Butt Hinges: As applicable to each item specified.
      a. Standard Weight Hinges: Minimum of two (2) permanently lubricated non-detachable bearings.
      b. Heavy Weight Hinges: Minimum of four (4) permanently lubricated bearings on heavy weight hinges.
      c. Template screw hole locations.
      d. Bearing assembly installed after plating.
      e. Bearings: Exposed fully hardened bearings.
      f. Bearing Shells: Shapes consistent with barrels.
      g. Pins: Easily seated, non-rising pins.
         1) Fully plated hinge pins.
         2) Non-Removable Pins: Slotted stainless steel screws.
      h. UL 10C listed for fire-resistance-rated doors.
   2. Continuous Hinges: As applicable to each item specified.
      a. Geared Continuous Hinges: As applicable to each item specified.
         1) Anti-spinning through-fastener.
         2) UL 10C listed for fire-resistance-rated doors.
            (a) Metal Door Installation: Rated up to 90 minutes.
            (b) Wood Door Installation: Rated up to 60 minutes.
         3) Sufficient size to permit door to swing 180 degrees

C. Sizes: See Door Hardware Schedule.
   1. Hinge Widths: As required to clear surrounding trim.
   2. Sufficient size to allow 180 degree swing of door.

D. Finishes: See Door Hardware Schedule.
   1. Fully polished hinges; front, back, and barrel.

E. Grades:
   1. Butt Hinges: Comply with BHMA A156.1 and BHMA A156.7 for templated hinges.
   2. Continuous Hinges: Comply with BHMA A156.26, Grade 1.

F. Material: Base metal as indicated for each item by BHMA material and finish designation.

G. Types:
   1. Butt Hinges: Include full mortise hinges.

2. Continuous Hinges: Include geared hinges.

H. Quantities:
1. Butt Hinges: Three (3) hinges per leaves up to 90 inches in height. Add one (1) for each additional 30 inches in height or fraction thereof.
   a. Hinge weight and size unless otherwise indicated in hardware sets:
      1) For doors up to 36 inches wide and up to 1-3/4 inches thick provide hinges with a minimum thickness of 0.134 inch and a minimum of 4-1/2 inches in height.
      2) For doors from 36 inches wide up to 42 inches wide and up to 1-3/4 inches thick provide hinges with a minimum thickness of 0.145 inch and a minimum of 4-1/2 inches in height.
      3) For doors from 42 inches wide up to 48 inches wide and up to 1-3/4 inches thick provide hinges with a minimum thickness of 0.180 inch and a minimum of 5 inches in height.
      4) For doors greater than 1-3/4 inches thick provide hinges with a minimum thickness of 0.180 inch and a minimum of 5 inches in height.
2. Continuous Hinges: One per door leaf.

I. Applications: At swinging doors.
1. Provide non-removable pins at out-swinging doors with locking hardware and all exterior doors.

2.04 EXIT DEVICES

A. Manufacturers:
1. BEST / PRECISION

B. Properties:
1. Actuation: Cross Bar
2. Chassis:
   a. Construction: Investment cast steel, zinc dichromate plated.
   b. Compatibility: Standard Stile and Narrow Stile doors.
3. Latch Bolts: Stainless steel deadlocking with 3/4 inch projection using latch bolt.
4. Lever Design: Match project standard lockset trims.
5. Cylinder: Include where cylinder dogging or locking trim is indicated.
6. Strike as recommended by manufacturer for application indicated.
7. Sound dampening on touch bar.
8. Dogging:
   a. Non-Fire-Resistance-Rated Devices: Cylinder dogging (except on MLR devices).
   b. Fire-Resistance-Rated Devices: Manual dogging not permitted.
9. Touch bar assembly on wide style exit devices to have a 1/4 inch clearance to allow for vision frames.
10. All exposed exit device components to be of architectural metals and “true” architectural finishes.
11. Handing: Field-reversible.
12. Fasteners on Back Side of Device Channel: Concealed - exposed fasteners not allowed.
13. Vertical Latch Assemblies' Operation: Gravity, without use of springs.

C. Grades: Complying with BHMA A156.3, Grade 1.

1. Provide exit devices tested and certified by UL or by a recognized independent laboratory for mechanical operational testing to 10 million cycles minimum with inspection confirming Grade 1 Loaded Forces have been maintained.

D. Standards Compliance:
1. UL Listed for Panic and Fire for Class II Circuitry.
2. Provide UL (DIR) listed exit device assemblies for fire-resistance-rated doors.
3. Comply with UL 10C.

2.05 MORTISE LOCKS

A. Manufacturers:
1. BEST

B. Properties:
1. Mechanical Locks:
a. Shall be tested and approved by BHMA for ANSI A156.13, Series 1000, Operational Grade 1, and be UL 10C.
b. Door Thickness Fit: 1-3/8 inches to 2-1/4 inches thick doors.
c. Cylinders:
1) Cylinder Core Types: Locks capable of supporting manufacturers' cores, as applicable.
(a) Small format interchangeable.
d. Lever Trim:
1) Style: See Door Hardware Schedule.
2) Strength: Locksets outside locked lever designed to withstand minimum1,400 inch-lbs. of torque. In excess of that, a replaceable part will shear. Key from outside and/or inside lever will still operate lockset.

C. Finishes: See Door Hardware Schedule.
1. Core Faces: Match finish of lockset.

2.06 CLOSERS

A. Manufacturers:
1. BEST

B. Properties:
1. Surface Mounted Closers: Manufacturer's standard.
a. Construction: R14 high silicon aluminum alloy.
b. Maximum Projection from Face of Door: 2-7/16 inches.
c. Mechanism: Separate tamper-resistant adjusting valves for closing and latching speeds.
1) Include advanced backcheck feature.
2) Include delayed action feature.
d. Pinion: Stainless steel.
e. Hydraulic Fluid: All-weather type.
f. Arm Assembly: Standard for product specified.
1) Material: Steel.
2) Include hold-open, integral stop, or spring-loaded stop feature, as specified in Door Hardware Schedule.
3) Parallel arm to be a heavy-duty rigid arm.

4) Where “IS” or “S-IS” arms are specified in hardware sets, if manufacturer does not offer this arm provide a regular arm mount closer in conjunction with a heavy-duty overhead stop equal to a dormakaba 900 Series.

g. Covers:
1) Type: Standard for product selected.
(a) Full.
2) Material: Plastic.
3) Finish: Painted.

C. Grades:
1. Closers: Comply with BHMA A156.4, Grade 1.
a. Underwriters Laboratories Compliance:
1) Product Listing: UL (DIR) and ULC for use on fire-resistance-rated doors.
(a) UL 228 - Door Closers-Holders, With or Without Integral Smoke Detectors.
b. Testing Standards Compliance: Meeting requirements of UL 10C for positive pressure.

D. Types:
1. Rack-and-pinion, surface-mounted. 1-1/2 inches minimum bore.

E. Options:
1. Delayed action, adjustable with an independent valve.
2. Advanced backcheck.

F. Installation:
1. Mounting: Includes surface mounted installations.
2. Mount closers on non-public side of door and stair side of stair doors unless otherwise noted in hardware sets.
3. At out swinging exterior doors, mount closer on interior side of door.
4. Provide adapter plates, shim spacers, and blade stop spacers as required by frame and door conditions.
5. Where an overlapping astragal is included on pairs of swinging doors, provide coordinator to ensure door leaves close in proper order.

2.07 PROTECTION PLATES

A. Manufacturers:
1. BURNS

B. Properties:
1. Plates:
a. Kick Plates: Provide along bottom edge of push side of each door, where indicated in hardware sets.
1) Size: 10 inches high by inches less than door width (LDW) on push side of door, or 1 inch LDW on pairs of doors without mullion.
b. Mop Plates: Provide along bottom edge of pull side of doors, where indicated in hardware sets.
1) Size: 6 inches high by 1 inch less than door width (LDW) on pull side of door.
c. Edges: Beveled, on four (4) unless otherwise indicated.

C. Grades: Comply with BHMA A156.6.

D. Material: As indicated for each item by BHMA material and finish designation.
   1. Metal Properties: Stainless steel.
      a. Metal, Standard Duty: Thickness 0.050 inch, minimum.

E. Installation:
   1. Fasteners: Countersunk screw fasteners

2.08 STOPS AND HOLDERS

A. Manufacturers:
   1. ABH

B. General: Provide overhead stop/holder when wall or floor stop is not feasible.

C. Grades:
   1. Wall Bumpers: Comply with BHMA A156.16 and Resilient Material Retention Test as described in this standard.

D. Material: Base metal as indicated for each item by BHMA material and finish designation.

E. Types:
   1. Wall Bumpers: Bumper, concave, wall stop.

F. Installation:
   1. Non-Masonry Walls: Confirm adequate wall reinforcement has been installed to allow lasting installation of wall bumpers.

G. Products:
   1. Wall Bumpers. 1270WV

2.09 THRESHOLDS

A. Manufacturers:
   1. NATIONAL GUARD PRODUCTS

B. Properties:
   1. Threshold Surface: Fluted horizontal grooves across full width.

C. Grades: Thresholds: Comply with BHMA A156.21.

D. Material: Base metal as indicated for each item by BHMA material and finish designation.

E. Types: As applicable to project conditions. Provide barrier-free type at every location where specified.
   1. Saddle Thresholds: Without thermal break.

F. Products:
   1. 425.

2.10 WEATHERSTRIPPING AND GASKETING

A. Manufacturers:
   1. NATIONAL GUARD PRODUCTS

B. Properties:
   1. Weatherstripping Air Leakage Performance: Not exceeding 0.3 cfm/sq ft of door opening at 0.3 inches of water pressure differential for single doors, and 0.5 cfm/sq ft of door area at 0.3 inches of water pressure differential for double doors for gasketing other than smoke control, as tested according to ASTM E283/E283M; with resilient or flexible seal strips that are easily replaceable and readily available from stocks maintained by manufacturer.

2. Adhesive-Backed Perimeter Gasketing: Silicone gasket material applied to frame with self- adhesive.
3. Rigid, Housed, Perimeter Gasketing: Sponge neoprene gasket material held in place by aluminum housing; fastened to frame stop with screws.
4. Door Sweeps: Nylon brush gasket material held in place by flat Aluminum housing or flange; surface mounted to face of door with screws. Provide integral rain drip where indicated.
5. Automatic Door Bottoms: Sponge neoprene gasket material held in place by aluminum housing that automatically drops to form seal when door is closed.
   a. Mounting: Mortised into bottom of door.

C. Grades: Comply with BHMA A156.22.

D. Products:
1. Weatherstripping: See Door Hardware Schedule.
2. Smoke Seals: See Door Hardware Schedule.
3. Door Bottom Seals:
   a. Door Sweeps: See Door Hardware Schedule.
   b. Door Bottoms: See Door Hardware Schedule.
   c. Automatic Door Bottoms: See Door Hardware Schedule.

2.11 KEYS AND CORES

A. Manufacturers:
1. BEST

B. Properties: Complying with guidelines of BHMA A156.28.
1. CORMAX
2. Provide small format interchangeable core (SFIC).
3. Provide keying information in compliance with DHI (KSN) standards.
4. Keying Schedule: Arrange for a keying meeting, with Architect, Owner and hardware supplier, and other involved parties to ensure locksets and locking hardware, are functionally correct and keying complies with project requirements.
5. Keying: Grand master keyed.
6. Include construction keying and control keying with removable core cylinders.
7. Supply keys in following quantities:
   a. Grand Master Keys: 1 each.
   b. Construction Master Keys: 6 each.
   c. Construction Keys: 15 each.
   d. Construction Control Keys: 2 each.
   e. Control Keys if New System: 2 each.
8. Provide key collection envelopes, receipt cards, and index cards in quantity suitable to manage number of keys.
9. Deliver keys with identifying tags to Owner by security shipment direct from manufacturer.
10. Permanent Keys and Cores: Stamped with applicable key marking for identification. Do not include actual key cuts within visual key control marks or codes. Stamp permanent keys "Do Not Duplicate."
11. Include installation of permanent cores and return construction cores to hardware supplier. Construction cores and keys to remain property of hardware supplier.

2.12 FINISHES

A. Finishes: Identified in Hardware Sets.

PART 3 EXECUTION

3.01 EXAMINATION

A. Verify that doors and frames are ready to receive this work; labeled, fire-rated doors and frames are properly installed, and dimensions are as indicated on shop drawings.

B. Correct all defects prior to proceeding with installation.

C. Verify that electric power is available to power operated devices and of correct characteristics.

3.02 INSTALLATION

A. Install hardware in accordance with manufacturer's instructions and applicable codes.

B. Install hardware using the manufacturer's fasteners provided. Drill and tap all screw holes located in metallic materials. Do not use "Riv-Nuts" or similar products.

C. Install hardware on fire-rated doors and frames in accordance with applicable codes and NFPA 80.

D. Use templates provided by hardware item manufacturer.

E. Do not install surface mounted items until application of finishes to substrate are fully completed.

F. Wash down masonry walls and complete painting or staining of doors and frames.

G. Complete finish flooring prior to installation of thresholds.

H. Door Hardware Mounting Heights: Distance from finished floor to center line of hardware item. As indicated in following list, unless noted otherwise in Door Hardware Schedule or on drawings.
   1. For Steel Doors and Frames: Install in compliance with DHI (LOCS) recommendations.
   2. For Steel Door Frames: See Section 08 12 13.
   3. For Aluminum-Framed Storefront Doors and Frames: See Section 08 43 13.
   4. For Wood Doors: Install in compliance with DHI WDHS.3 recommendations.
   5. Flush Wood Doors: See Section 08 14 16.
   6. Mounting heights in compliance with ADA Standards:
      a. Locksets: 40-5/16 inch.
      b. Push Plates/Pull Bars: 42 inch.
      c. Exit Devices: 40-5/16 inch.

I. Set exterior door thresholds with full-width bead of elastomeric sealant at each point of contact with floor providing a continuous weather seal. Anchor thresholds with stainless steel countersunk screws.

J. Include in installation for existing doors and frames any necessary field modification and field preparation of doors and frames for new hardware. Provide necessary fillers, reinforcements, and fasteners for mounting new hardware and to cover existing door and frame preparations.

3.03 FIELD QUALITY CONTROL

A. Perform field inspection and testing under provisions of Section 01 40 00 - Quality Requirements.

3.04 ADJUSTING

A. Adjust work under provisions of Section 01 70 00 - Execution and Closeout Requirements.

B. Adjust hardware for smooth operation.

C. Adjust gasketing for complete, continuous seal; replace if unable to make complete seal.

3.05 CLEANING

A. Clean finished hardware in accordance with manufacturer's written instructions after final adjustments have been made.

B. Clean adjacent surfaces soiled by hardware installation activities.

C. Replace items that cannot be cleaned to manufacturer's level of finish quality at no additional cost.

D. See Section 01 74 19 - Construction Waste Management and Disposal, for additional requirements.

3.06 PROTECTION

A. Protect finished Work under provisions of Section 01 70 00 - Execution and Closeout Requirements.Do not permit adjacent work to damage hardware or finish.

B. Do not permit adjacent work to damage hardware or finish.

3.07 HARDWARE SETS

MANUFACTURER LIST

ABH	ARCHITECTURAL BUILDERS HARDWARE
BES	BEST
BRN	BURNS MANUFACTURING
DK	DORMAKABA
DKA	DORMAKABA ARCHITECTURAL
KED	KEDEX
LOC	LOCINEX MAMMOTH
NGP	NATIONAL GUARD PRODUCTS
PRE	BEST (PRECISION)
RCI	RUTHERFORD CONTROLS INC
VON	VON DUPRIN (GATE HARDWARE)

FINISH LIST

CODE:	NAME:
US26D	SATIN CHROMIUM PLATED
US27	MILL ALUMINUM
US28	BRUSHED ANODIZED ALUMINUM
US32D	SATIN STAINLESS STEEL

603	ZINC PLATED
626	SATIN CHROMIUM PLATED
630	SATIN STAINLESS STEEL
689	ALUMINUM (PAINTED)
A	ANODIZED ALUMINUM
B	BLACK
C	CHARCOAL
GRAY	GRAY

SET #1.0
DOORS: 108, 118, 119, 120, 121, 122, 134, 135A, 135B, 138, 139

3.0	HINGE	FBB179 45X45	26D	BES
1.0	LOCK (OFFICE)	45H 7 AB 14 H CORMAX	630	BES
1.0	WALL STOP	560	626	BRN
3.0	SILENCER	500	GRAY	BRN

SET #2.0 (BULLET RESISTANT)
DOOR: 100B

1.0	PIVOT SET	OP440	626	DKA
1.0	INTERMEDIATE PIVOT	75220	626	DKA
1.0	EXIT DEVICE	2108 4908 D S300	630	PRE
1.0	RIM CYLINDER	12E 7 2 CORMAX S2 RP	626	BES
1.0	CONSTRUCTION CORE	7190224 (7P)		BES
1.0	DOOR CLOSER	EHD90 16 SPA90	689	BES
1.0	KICK PLATE	KP50 CSK B4E HEAVY 10" DOOR WIDTH LESS 1.5"		630
	BRN			
1.0	WALL STOP	1842	US32D	ABH
3.0	SILENCER	500	GRAY	BRN

SET #3.0
DOORS: 102, 103, 106, 128, 130, 132

3.0	HINGE	FBB179 45X45	26D	BES
1.0	PRIVACY X OCC IND	45H 0L 14H VIT	630	BES
1.0	DOOR CLOSER	EHD90 16 DAAVB AF90	689	BES
1.0	KICK PLATE	KP50 CSK B4E HEAVY 10" DOOR WIDTH LESS 1.5"		630
	BRN			
1.0	MOP PLATE	MP50 CSK B4E HEAVY 5" DOOR WIDTH LESS 1"		630
	BRN			
1.0	WALL STOP	1842	US32D	ABH
3.0	SILENCER	500	GRAY	BRN

SET #3.1
DOORS: 158

3.0	HINGE	FBB179 45X45	26D	BES
1.0	KEYED PRIVACY X OCC IND		45H 7T 14H	
CORMAX VIT		630	BES	
1.0	CONSTRUCTION CORE	7190224 (7P)		BES
1.0	DOOR CLOSER	EHD90 16 DAAVB AF90	689	BES
1.0	KICK PLATE	KP50 CSK B4E HEAVY 10" DOOR WIDTH LESS 1.5"		630
	BRN			
1.0	MOP PLATE	MP50 CSK B4E HEAVY 5" DOOR WIDTH LESS 1"		630
	BRN			
1.0	WALL STOP	1842	US32D	ABH
3.0	SILENCER	500	GRAY	BRN

SET #3.2 (SOUND CONTROL)
DOORS: 141

3.0	HINGE	FBB179 45X45	26D	BES
1.0	KEYED PRIVACY X OCC IND		45H 7T 14H	
CORMAX VIT		630	BES	
1.0	CONSTRUCTION CORE	7190224 (7P)		BES
1.0	DOOR CLOSER	EHD90 16 DAAVB AF90	689	BES
1.0	KICK PLATE	KP50 CSK B4E HEAVY 10" DOOR WIDTH LESS 1.5"		630
	BRN			
1.0	MOP PLATE	MP50 CSK B4E 5" X 1" LDW X SEC SCREWS	630	BRN
1.0	WALL STOP	1842	US32D	ABH
1.0	GASKETING	5060 HEAD & JAMBS (2)	C	NGP
1.0	GASKETING	5075 HEAD & JAMBS (2)	C	NGP
1.0	THRESHOLD	896S-ADJ LAR	A	NGP

SET #3.3
DOORS: 112, 113

3.0	HINGE	FBB168 45X45	26D	BES
1.0	DEADLOCK (CLASSROOM)		45H 7RD	
CORMAX		630	BES	
1.0	PUSH PLATE	77	630	BRN
1.0	PULL PLATE	7426C	630	BRN
1.0	DOOR CLOSER	EHD90 16 AF90	689	BES
1.0	KICK PLATE	KP50 CSK B4E HEAVY 10" DOOR WIDTH LESS 1.5"		630
	BRN			
1.0	MOP PLATE	MP50 CSK B4E HEAVY 5" DOOR WIDTH LESS 1"		630
	BRN			
1.0	WALL STOP	1842	US32D	ABH
3.0	SILENCER	500	GRAY	BRN

SET #4.0
DOOR: 104A, 107, 133

3.0	HINGE	FBB179 45X45	26D	BES
1.0	LOCK (STOREROOM)	45H 7D 14H CORMAX	630	BES
2.0	CONSTRUCTION CORE	7190224 (7P)		BES
1.0	DOOR CLOSER	EHD90 16 AF90	689	BES
1.0	KICK PLATE	KP50 CSK B4E HEAVY 10" DOOR WIDTH LESS 1.5"		630
	BRN			
1.0	WALL STOP	1842	US32D	ABH
3.0	SILENCER	500	GRAY	BRN

SET #4.1
DOOR: 104B, 105B, 115, 129, 131

3.0	HINGE	FBB179 45X45	26D	BES
1.0	LOCK (STOREROOM)	45H 7D 14H CORMAX	630	BES
1.0	CONSTRUCTION CORE	7190224 (7P)		BES
1.0	WALL STOP	1842	US32D	ABH
3.0	SILENCER	500	GRAY	BRN

SET #4.2
DOOR: 159C

3.0	HINGE	FBB179 45X45	26D	BES
1.0	LOCK (STOREROOM)	45H 7D 14H CORMAX	630	BES
2.0	CONSTRUCTION CORE	7190224 (7P)		BES
1.0	OVERHEAD CONCEALED		1020 SERIES	
	US32D	ABH		
	STOP			
3.0	SILENCER	500	GRAY	BRN

SET #4.3

3.0	HINGE	FBB179 45X45	26D	BES
1.0	LOCK (STOREROOM)	45H 7D 14H CORMAX	630	BES
2.0	CONSTRUCTION CORE	7190224 (7P)		BES
1.0	DOOR CLOSER	EHD90 16 AF90	689	BES

1.0	KICK PLATE BRN	KP50 CSK B4E HEAVY 10" DOOR WIDTH LESS 1.5"		630
1.0	WALL STOP	1842	US32D	ABH
3.0	SILENCER	500	GRAY	BRN

SET #5.0
DOORS: 153

3.0	HINGE	FBB179 45X45	26D	BES
1.0	LOCK (STOREROOM)	45H 7D 14H CORMAX	630	BES
2.0	CONSTRUCTION CORE	7190224 (7P)		BES
1.0	DOOR CLOSER	EHD90 16 AF90	689	BES
1.0	KICK PLATE BRN	KP50 CSK B4E HEAVY 10" DOOR WIDTH LESS 1.5"		630
1.0	WALL STOP	1842	US32D	ABH
1.0	GASKETING	5050 HEAD & JAMBS (2)	C	NGP

SET #6.0 (BULLET RESISTANT)
DOOR: 105, 125

1.0	PIVOT SET	OP440	626	DKA
1.0	INTERMEDIATE PIVOT	75220	626	DKA
1.0	LOCK (STOREROOM)	45H 7D 14H CORMAX	630	BES
2.0	CONSTRUCTION CORE	7190224 (7P)		BES
1.0	DOOR CLOSER	EHD90 16 AF90	689	BES
1.0	KICK PLATE BRN	KP50 CSK B4E HEAVY 10" DOOR WIDTH LESS 1.5"		630
1.0	WALL STOP	1842	US32D	ABH
3.0	SILENCER	500	GRAY	BRN

SET #7.0
DOORS: 142, 143, 157

3.0	HINGE	FBB179 45X45	26D	BES
1.0	LOCK (STOREROOM)	45H 7D 14H CORMAX	630	BES
1.0	CONSTRUCTION CORE	7190224 (7P)		BES
1.0	DOOR CLOSER	EHD90 16 AF90	689	BES
1.0	KICK PLATE BRN	KP50 CSK B4E HEAVY 10" DOOR WIDTH LESS 1.5"		630
1.0	WALL STOP	1842	US32D	ABH
1.0	GASKETING	5060 HEAD & JAMBS (2)	C	NGP

1.0	GASKETING	5075 HEAD & JAMBS (2)	C	NGP
1.0	THRESHOLD	896S-ADJ LAR	A	NGP

SET #8.0
DOORS: 136

3.0	HINGE	FBB179 45X45	26D	BES
1.0	LOCK (CLASSROOM)	45H 7R 14H CORMAX	630	BES
2.0	CONSTRUCTION CORE	7190224 (7P)		BES
1.0	WALL STOP	1842	US32D	ABH
3.0	SILENCER	500	GRAY	BRN

SET #9.0
DOORS: 109, 116, 123, 137, 151, 152

3.0	HINGE	FBB168 45X45	26D	BES
1.0	LOCK (CLASSROOM)	45H 7R 14H CORMAX	630	BES
2.0	CONSTRUCTION CORE	7190224 (7P)		BES
1.0	DOOR CLOSER	EHD90 16 AF90	689	BES
1.0	KICK PLATE	KP50 CSK B4E HEAVY 10" DOOR WIDTH LESS 1.5"		630
	BRN			
1.0	WALL STOP	1842	US32D	ABH
1.0	GASKETING	5050 HEAD & JAMBS (2)	C	NGP

SET #10.0 (DOUBLE EGRESS)
DOOR: 101A

6.0	HINGE	FBB168 45X45	26D	BES
2.0	EXIT DEVICE	2201 LBR S300	630	PRE
2.0	OVERHEAD CONCEALED		1020 SERIES	
	US32D	ABH		
	STOP			
1.0	DOOR CLOSER	EHD90 16 AF90 (INSTALL ON COMM RM SIDE)		689
	BES			
1.0	DOOR CLOSER	EHD90 16 SPA90 (INSTALL ON COMM RM SIDE)		689
	BES			
1.0	GASKETING	5060 HEAD & JAMBS (2)	C	NGP
1.0	GASKETING	MEETING EDGE GASKET 600 (SET) X FULL HEIGHT		A
	NGP			

NOTE: 1. CARD READER, POWER SUPPLY AND ALL OTHER ELECTRONIC ACCESS CONTROL ITEMS PROVIDED BY OTHER. 2. VERIFY CODE COMPLIANCE WITH LOCAL AHJ.

SET #11.0
DOOR: 114

3.0	HINGE	FBB199 NRP 45X45	32D	BES
1.0	LOCK (STOREROOM)	45H 7D 14H CORMAX	630	BES
1.0	CONSTRUCTION CORE	7190224 (7P)		BES
1.0	LATCH PROTECTOR	623	603	BRN
1.0	OVERHEAD CONCEALED		1020 SERIES	
	US32D	ABH		
	STOP			
1.0	DRIP CAP	16 4" ODW	A	NGP
1.0	GASKETING	5050 HEAD & JAMBS (2)	C	NGP
1.0	SWEEP	198N LAR	A	NGP
1.0	THRESHOLD	425 LAR (1/4-20 MS/EA) HD	A	NGP

SET #12.0 (OVERHEAD COILING DOOR)
DOORS: 160B, 160C

NOTES:

1. ALL HARDWARE PROVIDED BY OVERHEAD COILING DOOR MANUFACTURER.
2. CARD READER, POWER SUPPLY AND ALL OTHER ELECTRONIC ACCESS CONTROL ITEMS PROVIDED BY OTHER.

SET #12.1 (HOLDING CELL)
DOORS: 155, 156

NOTES:

1. ALL HARDWARE PROVIDED BY CELL DOOR MANUFACTURER.
2. CARD READER, POWER SUPPLY AND ALL OTHER ELECTRONIC ACCESS CONTROL ITEMS PROVIDED BY OTHER.

SET #13.0
DOOR: 162

3.0	HINGE	FBB179 45X45	26D	BES
1.0	LOCK (STOREROOM)	45H 7D 14H CORMAX	630	BES
1.0	CONSTRUCTION CORE	7190224 (7P)		BES
1.0	DOOR CLOSER	EHD90 16 AF90	689	BES
1.0	KICK PLATE	KP50 CSK B4E HEAVY 10" DOOR WIDTH LESS 1.5"		630
	BRN			
1.0	MOP PLATE	MP50 CSK B4E HEAVY 5" DOOR WIDTH LESS 1"		630
	BRN			
1.0	WALL STOP	1842	US32D	ABH
1.0	GASKETING	5060 HEAD & JAMBS (2)	C	NGP

1.0	GASKETING	5075 HEAD & JAMBS (2)	C	NGP
1.0	THRESHOLD	896S-ADJ LAR	A	NGP

SET #14.0
DOORS: 140A

3.0	HINGE	FBB199 NRP 45X45	32D	BES
1.0	EXIT DEVICE (CLASSROOM)		FL 2303 M 4908D	
	630	PRE		
1.0	RIM CYLINDER	12E 7 2 CORMAX S2 RP	626	BES
1.0	CONSTRUCTION CORE	7190224 (7P)		BES
1.0	WALL STOP	1842	US32D	ABH
1.0	DOOR CLOSER	EHD90 16 SPA90	689	BES
1.0	KICK PLATE	KP50 CSK B4E HEAVY 10" DOOR WIDTH LESS 1.5"		630
	BRN			
1.0	GASKETING	5050 HEAD & JAMBS (2)	C	NGP

SET #EAC-1.0 (3 DOOR INTERLOCK-2 CARD READERS - NR)
DOOR: 159A

2.0	HINGE	FBB168 NRP 45X45	26D	BES
1.0	HINGE	PT HINGE CE FBB168 56 45X45 6 WIRE	26D	BES
1.0	ELECTROMECHANICAL	45HW 7WEL 14H CORMAX C RQE	630	BES
	LOCK	(2 CYL X FAIL SAFE)		
2.0	CONSTRUCTION CORE	7190224 (7P)		BES
1.0	DOOR CLOSER	EHD90 16 AF90P	689	BES
1.0	KICK PLATE	KP50 CSK B4E HEAVY 10" DOOR WIDTH LESS 1.5"		630
	BRN			
1.0	WIRING HARNESS	WH-(VERIFY LENGTH)-P (POWER-TO-HINGE)		BES
1.0	WIRING HARNESS	WH-(VERIFY LENGTH)-P (HINGE-TO-ELEC LOCK)		
	BES			
1.0	DOOR POSITION SWITCH	9540	B	RCI
1.0	WALL STOP	1842	US32D	ABH
1.0	GASKETING	5050 HEAD & JAMBS (2)	C	NGP
1.0	SWEEP	198N LAR	A	NGP
1.0	THRESHOLD	425 LAR (1/4-20 MS/EA) HD	A	NGP
1.0	CONTROLLER	DORTRONICS 48501PLC		
		(SHARED FOR 3 DOOR INTERLOCK)		

NOTE: CARD READER, POWER SUPPLY AND ALL OTHER ELECTRONIC ACCESS CONTROL ITEMS PROVIDED BY OTHER.

SET #EAC-1.1 (3 DOOR INTERLOCK-2 CARD READERS - 90 MIN)
DOOR: 159B

2.0	HINGE	FBB168 NRP 45X45	26D	BES
1.0	HINGE	PT HINGE CE FBB168 56 45X45 6 WIRE	26D	BES

1.0	ELECTROMECHANICAL LOCK	45HW 7WEL 14H CORMAX C RQE (2 CYL X FAIL SAFE)	630	BES
2.0	CONSTRUCTION CORE	7190224 (7P)		BES
1.0	DOOR CLOSER	EHD90 16 AF90P	689	BES
1.0	KICK PLATE BRN	KP50 CSK B4E HEAVY 10" DOOR WIDTH LESS 1.5"		630
1.0	WIRING HARNESS	WH-(VERIFY LENGTH)-P (POWER-TO-HINGE)		BES
1.0	WIRING HARNESS BES	WH-(VERIFY LENGTH)-P (HINGE-TO-ELEC LOCK)		
1.0	WALL STOP	1842	US32D	ABH
1.0	GASKETING	5050 HEAD & JAMBS (2)	C	NGP
1.0	DOOR POSITION SWITCH	9540	B	RCI

NOTE: CARD READER, POWER SUPPLY AND ALL OTHER ELECTRONIC ACCESS CONTROL ITEMS PROVIDED BY OTHER.

<u>SET #EAC-1.2</u> (3 DOOR INTERLOCK-EXTERIOR-1 CARD READER)
DOOR: 160A

1.0	HINGE	PT HINGE CE FBB199 56 45X45	32D	BES
2.0	HINGE	FBB199 NRP 45X45	32D	BES
1.0	ELECTROMECHANICAL LOCK	45HW 7WEL 14H CORMAX C RQE (2 CYL X FAIL SAFE)	630	BES
2.0	CONSTRUCTION CORE	7190224 (7P)		BES
1.0	OVERHEAD CONCEALED US32D STOP	ABH	1020 SERIES	
1.0	DOOR CLOSER	EHD90 16 SPA90	689	BES
1.0	KICK PLATE BRN	KP50 CSK B4E HEAVY 10" DOOR WIDTH LESS 1.5"		630
1.0	WIRING HARNESS	WH-(VERIFY LENGTH)-P (POWER-TO-HINGE)		BES
1.0	WIRING HARNESS BES	WH-(VERIFY LENGTH)-P (HINGE-TO-ELEC LOCK)		
1.0	DOOR POSITION SWITCH	9540	B	RCI
1.0	GASKETING	5050 HEAD & JAMBS (2)	C	NGP
1.0	DRIP CAP	16 4" ODW	A	NGP
1.0	DOOR BOTTOM	101V LAR	US27	NGP
1.0	THRESHOLD	425 LAR (1/4-20 MS/EA) HD	A	NGP

NOTE: CARD READER, POWER SUPPLY AND ALL OTHER ELECTRONIC ACCESS CONTROL ITEMS PROVIDED BY OTHER.

SET #EAC-2.0
DOORS: 111A, 111B

1.0	HINGE	PT HINGE CE FBB199 56 45X45	32D	BES
2.0	HINGE	FBB199 NRP 45X45	32D	BES
1.0	EXIT DEVICE	C E TS 2303 CD M 4908D (FSE-RQE)	630	PRE
1.0	RIM CYLINDER	12E 7 2 CORMAX S2 RP	626	BES
1.0	MORTISE CYLINDER	1E-74 CORMAX (CYLINDER DOGGING)	626	BES
2.0	CONSTRUCTION CORE	7190224 (7P)		BES
1.0	OVERHEAD CONCEALED		1020 SERIES	
	US32D	ABH		
	STOP			
1.0	DOOR CLOSER	EHD90 16 SPA90	689	BES
1.0	KICK PLATE	KP50 CSK B4E HEAVY 10" DOOR WIDTH LESS 1.5"		630
	BRN			
1.0	DOOR POSITION SWITCH	9540	B	RCI
1.0	WIRING HARNESS	WH-(VERIFY LENGTH)-P (POWER-TO-HINGE)		BES
1.0	WIRING HARNESS	WH-(VERIFY LENGTH)-P (HINGE-TO-EL EXIT DEVICE)		
	BES			
1.0	DRIP CAP	16 4" ODW	A	NGP
1.0	GASKETING	5050 HEAD & JAMBS (2)	C	NGP
1.0	DOOR BOTTOM	101V LAR	US27	NGP
1.0	THRESHOLD	425 LAR (1/4-20 MS/EA) HD	A	NGP

NOTE: CARD READER, POWER SUPPLY AND ALL OTHER ELECTRONIC ACCESS CONTROL ITEMS PROVIDED BY OTHER.

SET #EAC-2.1
DOORS: 111C, 161

1.0	HINGE	PT HINGE CE FBB199 56	32D	BES
		(COORDINATE HINGE SIZE TO ACCOMMODATE 180 DEGREE		
SWING)				
2.0	HINGE	FBB199 NRP 45X45	32D	BES
		(COORDINATE HINGE SIZE TO ACCOMMODATE 180 DEGREE		
SWING)				
1.0	EXIT DEVICE	C E TS 2303 M 4908D (FSE-RQE)	630	PRE
1.0	RIM CYLINDER	12E 7 2 CORMAX S2 RP	626	BES
1.0	MORTISE CYLINDER	1E-74 CORMAX (CYLINDER DOGGING)	626	BES
2.0	CONSTRUCTION CORE	7190224 (7P)		BES
1.0	WALL STOP	1842	US32D	ABH
1.0	DOOR CLOSER	EHD90 16 SPA90	689	BES
1.0	KICK PLATE	KP50 CSK B4E HEAVY 10" DOOR WIDTH LESS 1.5"		630
	BRN			
1.0	DOOR POSITION SWITCH	9540	B	RCI

1.0	WIRING HARNESS	WH-(VERIFY LENGTH)-P (POWER-TO-HINGE)		BES
1.0	WIRING HARNESS BES	WH-(VERIFY LENGTH)-P (HINGE-TO-EL EXIT DEVICE)		
1.0	DRIP CAP	16 4" ODW	A	NGP
1.0	GASKETING	5050 HEAD & JAMBS (2)	C	NGP
1.0	DOOR BOTTOM	101V LAR	US27	NGP
1.0	THRESHOLD	425 LAR (1/4-20 MS/EA) HD	A	NGP

NOTE: CARD READER, POWER SUPPLY AND ALL OTHER ELECTRONIC ACCESS CONTROL ITEMS PROVIDED BY OTHER.

SET #EAC-3.0
DOOR: 100A

2.0	PIVOT SET	OP440	626	DKA
2.0	INTERMEDIATE PIVOT	75220	626	DKA
2.0	POWER TRANSFER	EPT-12C		PRE
1.0	MULLION	RM 0 KR 811 8	689	PRE
2.0	ELEC EXIT DEVICE	C MLR WTS 2403 CD A 2003 S300	630	PRE
2.0	MORTISE CYLINDER	1E-74 CORMAX (CYLINDER DOGGING)	626	BES
2.0	RIM CYLINDER	12E 7 2 CORMAX S2 RP	626	BES
1.0	RIM CYLINDER	12E 72 CORMAX S2 RP (KR MULLION)	626	BES
5.0	CONSTRUCTION CORE	7190224 (7P)		BES
2.0	OVERHEAD CONCEALED US32D STOP	ABH	1020 SERIES	
2.0	DOOR CLOSER	EHD90 16 AF90J (TOP JAMB)	689	BES
1.0	DRIP CAP	16 4" ODW	A	NGP
1.0	GASKETING	5050 HEAD & JAMBS (2)	C	NGP
2.0	DOOR BOTTOM	101V LAR	US27	NGP
1.0	THRESHOLD	425 LAR (1/4-20 MS/EA) HD	A	NGP
2.0	DOOR POSITION SWITCH	9540	B	RCI
2.0	WIRING HARNESS	WH-(VERIFY LENGTH)-P (POWER-TO-HINGE)		BES
2.0	WIRING HARNESS BES	WH-(VERIFY LENGTH)-P (HINGE-TO-EL EXIT DEVICE)		
1.0	POWER SUPPLY	RPSMLR2BB		PRE

NOTE: TIMER CONTROLLER AND ALL OTHER ELECTRONIC ACCESS CONTROL ITEMS PROVIDED BY OTHER.

SET #EAC-4.0
DOOR: 110

1.0	HINGE	PT HINGE CE FBB199 56 45X45	32D	BES
2.0	HINGE	FBB199 NRP 45X45	32D	BES
1.0	ELECTROMECHANICAL LOCK	45HW 7 DEU 14 H CORMAX C RQE (1 CYL X FAIL SECURE)	630	BES

1.0	CONSTRUCTION CORE	7190224 (7P)		BES
1.0	OVERHEAD CONCEALED		1020 SERIES	
	US32D	ABH		
	STOP			
1.0	DOOR CLOSER	EHD90 16 SPA90	689	BES
1.0	KICK PLATE	KP50 CSK B4E HEAVY 10" DOOR WIDTH LESS 1.5"		630
	BRN			
1.0	LATCH PROTECTOR	623	603	BRN
1.0	DOOR POSITION SWITCH	9540	B	RCI
1.0	WIRING HARNESS	WH-(VERIFY LENGTH)-P (POWER-TO-HINGE)		BES
1.0	WIRING HARNESS	WH-(VERIFY LENGTH)-P (HINGE-TO-ELEC LOCK)		
	BES			
1.0	DRIP CAP	16 4" ODW	A	NGP
1.0	GASKETING	5050 HEAD & JAMBS (2)	C	NGP
1.0	DOOR BOTTOM	101V LAR	US27	NGP
1.0	THRESHOLD	425 LAR (1/4-20 MS/EA) HD	A	NGP

NOTE: CARD READER, POWER SUPPLY AND ALL OTHER ELECTRONIC ACCESS CONTROL ITEMS PROVIDED BY OTHER.

SET #EAC-5.0
DOOR: 150

1.0	HINGE	PT HINGE CE FBB199 56 45X45	32D	BES
2.0	HINGE	FBB199 45X45	32D	BES
1.0	ELECTROMECHANICAL	45HW 7 DEU 14 H CORMAX C RQE	630	BES
	LOCK	(1 CYL X FAIL SECURE)		
1.0	CONSTRUCTION CORE	7190224 (7P)		BES
1.0	DOOR CLOSER	EHD90 16 AF90	689	BES
1.0	KICK PLATE	KP50 CSK B4E HEAVY 10" DOOR WIDTH LESS 1.5"		630
	BRN			
1.0	WALL STOP	560	626	BRN
1.0	DOOR POSITION SWITCH	9540	B	RCI
1.0	WIRING HARNESS	WH-(VERIFY LENGTH)-P (POWER-TO-HINGE)		BES
1.0	WIRING HARNESS	WH-(VERIFY LENGTH)-P (HINGE-TO-ELEC LOCK)		
	BES			
1.0	SWEEP	198N LAR	A	NGP
1.0	GASKETING	5050 HEAD & JAMBS (2)	C	NGP
1.0	THRESHOLD	425 LAR (1/4-20 MS/EA) HD	A	NGP

NOTE: CARD READER, POWER SUPPLY AND ALL OTHER ELECTRONIC ACCESS CONTROL ITEMS PROVIDED BY OTHER.

SET #EAC-6.0
DOOR: 116A, 116B, 126, 127, 145, 146, 147, 148, 149, 156

2.0	HINGE	FBB168 45X45 (NRP @ OUTSWING)	26D	BES
1.0	HINGE	PT HINGE CE FBB168 56 45X45 6 WIRE	26D	BES
1.0	ELECTROMECHANICAL LOCK	45HW 7 DEU 14 H CORMAX C RQE (1 CYL X FAIL SECURE)	630	BES
1.0	CONSTRUCTION CORE	7190224 (7P)		BES
1.0	DOOR CLOSER	EHD90 16 AF90	689	BES
1.0	KICK PLATE	KP50 CSK B4E HEAVY 10" DOOR WIDTH LESS 1.5"		630 BRN
1.0	WALL STOP	560	626	BRN
1.0	DOOR POSITION SWITCH	9540	B	RCI
1.0	WIRING HARNESS	WH-(VERIFY LENGTH)-P (POWER-TO-HINGE)		BES
1.0	WIRING HARNESS	WH-(VERIFY LENGTH)-P (HINGE-TO-ELEC LOCK)		BES
1.0	SWEEP	198N LAR	A	NGP
1.0	GASKETING	5050 HEAD & JAMBS (2)	C	NGP
1.0	THRESHOLD	425 LAR (1/4-20 MS/EA) HD	A	NGP

NOTE: CARD READER, POWER SUPPLY AND ALL OTHER ELECTRONIC ACCESS CONTROL ITEMS PROVIDED BY OTHER.

SET #G-1.0 (GATES)
GATES: G01, G02, G03

1.0	SELF CLOSING HINGE SET		MAMMOTH 180-LOC	9005
1.0	GATE LOCK BOX	K-BXMOR2		KED
1.0	ELECTROMECHANICAL LOCK	45HW 7 DEU 14 H CORMAX C RQE (1 CYL X FAIL SECURE)	630	BES
1.0	CONSTRUCTION CORE	7190224 (7P)		BES

NOTES:
1. BALANCE OF HARDWARE PROVIDED BY GATE MANUFACTURER.
2. CARD READER, POWER SUPPLY AND ALL OTHER ELECTRONIC ACCESS CONTROL ITEMS PROVIDED BY OTHER.

SET #G-2.0 (GATES)
GATES: G03

1.0	SELF CLOSING HINGE SET		MAMMOTH 180-LOC	9005
1.0	EXIT DEVICE	9953 x 252-L x WS x LD x WH	630	VON

1.0	RIM CYLINDER	12E 7 2 CORMAX S2 RP	626	BES
1.0	CONSTRUCTION CORE	7190224 (7P)		BES
1.0	ELECTRIC STIRKE	HES 9600 (OUTDOOR RATED)	626	HES

NOTES:
1. BALANCE OF HARDWARE PROVIDED BY GATE MANUFACTURER.
2. CARD READER, POWER SUPPLY AND ALL OTHER ELECTRONIC ACCESS CONTROL ITEMS PROVIDED BY OTHER.

END OF SECTION 08 71 00

SECTION 088000 - GLAZING

PART 1 - GENERAL

1.1 SUMMARY

A. Section Includes:

1. Glass products.
2. Laminated glass.
3. Insulating glass.
4. Glazing sealants.
5. Glazing tapes.
6. Miscellaneous glazing materials.

B. Related Requirements:
1. Section 084113 "Aluminum Framed Entrances and Storefronts".
2. Section 084413 "Glazed Aluminum Curtain walls".
3. Section 088813 "Fire-Rated Glazing."
4. Section 088853 “Security Glazing” for bullet resistant glazing.

1.2 DEFINITIONS

A. Glass Manufacturers: Firms that produce primary glass, fabricated glass, or both, as defined in referenced glazing publications.

B. Glass Thicknesses: Indicated by thickness designations in millimeters in accordance with ASTM C1036.

C. IBC: International Building Code.

D. Interspace: Space between lites of an insulating-glass unit.

1.3 COORDINATION

A. Coordinate glazing channel dimensions to provide necessary bite on glass, minimum edge and face clearances, and adequate sealant thicknesses, with reasonable tolerances to achieve proper safety margins for glazing retention under each design load case, load case combination, and service condition.

1.4 PREINSTALLATION MEETINGS

A. Preinstallation Conference: Conduct conference at Project site.

1. Review and finalize construction schedule and verify availability of materials, Installer's personnel, equipment, and facilities needed to make progress and avoid delays.
2. Review temporary protection requirements for glazing during and after installation.

1.5 ACTION SUBMITTALS

A. Product Data: For each type of product.

B. Glass Samples: For each type of glass product other than clear monolithic vision glass; 12 inches (300 mm) square.
1. Coated glass.
2. Insulating glass.

C. Glazing Schedule: List glass types and thicknesses for each size opening and location. Use same designations indicated on Drawings.

D. Delegated Design Submittal: For glass indicated to comply with performance requirements and design criteria, including analysis data signed and sealed by qualified professional engineer responsible for their preparation.

1.6 INFORMATIONAL SUBMITTALS

A. Qualification Data: For Installer.

B. Product Certificates: For glass.

C. Product Test Reports: For fabricated glass and glazing sealants, for tests performed by a qualified testing agency.

1. For glazing sealants, provide test reports based on testing current sealant formulations within previous 36-month period.

D. Preconstruction adhesion and compatibility test report.

E. Sample Warranties: For special warranties.

1.7 QUALITY ASSURANCE

A. Fabricated-Glass Manufacturer Qualifications: A qualified manufacturer of fabricated glass units who is approved by primary glass manufacturer.

B. Installer Qualifications: A qualified glazing contractor for this Project who is certified under the North American Contractor Certification Program (NACC) for Architectural Glass & Metal (AG&M) contractors.

1.8 PRECONSTRUCTION TESTING

A. Preconstruction Adhesion and Compatibility Testing: Test each glass product, tape sealant, gasket, glazing accessory, and glass-framing member for adhesion to and compatibility with elastomeric glazing sealants.

1. Testing is not required if data are submitted based on previous testing of current sealant products and glazing materials matching those submitted.
2. Use ASTM C1087 to determine whether priming and other specific joint-preparation techniques are required to obtain rapid, optimum adhesion of glazing sealants to glass, tape sealants, gaskets, and glazing channel substrates.
3. Test no fewer than eight Samples of each type of material, including joint substrates, shims, sealant backings, secondary seals, and miscellaneous materials.
4. Schedule enough time for testing and analyzing results to prevent delaying the Work.
5. For materials failing tests, submit sealant manufacturer's written instructions for corrective measures including use of specially formulated primers.

1.9 DELIVERY, STORAGE, AND HANDLING

A. Protect glazing materials in accordance with manufacturer's written instructions. Prevent damage to glass and glazing materials from condensation, temperature changes, direct exposure to sun, or other causes.

B. Comply with insulating-glass manufacturer's written instructions for venting and sealing units to avoid hermetic seal ruptures due to altitude change.

1.10 FIELD CONDITIONS

A. Environmental Limitations: Do not proceed with glazing when ambient and substrate temperature conditions are outside limits permitted by glazing material manufacturers and when glazing channel substrates are wet from rain, frost, condensation, or other causes.

1. Do not install glazing sealants when ambient and substrate temperature conditions are outside limits permitted by sealant manufacturer or are below 40 deg F (4.4 deg C).

1.11 WARRANTY

A. Manufacturer's Special Warranty for Coated-Glass Products: Manufacturer agrees to replace coated-glass units that deteriorate within specified warranty period. Deterioration of coated glass is defined as defects developed from normal use that are not attributed to glass breakage or to maintaining and cleaning coated glass contrary to manufacturer's written instructions. Defects include peeling, cracking, and other indications of deterioration in coating.

1. Warranty Period: 10 years from date of Substantial Completion.

B. Manufacturer's Special Warranty for Insulating Glass: Manufacturer agrees to replace insulating-glass units that deteriorate within specified warranty period. Deterioration of

insulating glass is defined as failure of hermetic seal under normal use that is not attributed to glass breakage or to maintaining and cleaning insulating glass contrary to manufacturer's written instructions. Evidence of failure is obstruction of vision by dust, moisture, or film on interior surfaces of glass.

1. Warranty Period: 10 years from date of Substantial Completion.

PART 2 - PRODUCTS

2.1 MANUFACTURERS

A. Source Limitations for Glazing Accessories: For each product and installation method, obtain from single source from single manufacturer.

2.2 PERFORMANCE REQUIREMENTS

A. General: Installed glazing systems shall withstand normal thermal movement and wind and impact loads (where applicable) without failure, including loss or glass breakage attributable to defective manufacture, fabrication, or installation; failure of sealants or gaskets to remain watertight and airtight; deterioration of glazing materials; or other defects in construction.

B. Delegated Design: Engage a qualified professional engineer, as defined in Section 014000 "Quality Requirements," to design glazing.

C. Structural Performance: Glazing shall withstand the following design loads within limits and under conditions indicated determined in accordance with the IBC and ASTM E1300:

1. Design Wind Pressures: As indicated on Drawings.

   a. Wind Design Data: As indicated on Drawings.
   b. Importance Factor: 1.0.
   c. Exposure Category: B.

2. Design Snow Loads: As indicated on Drawings.
3. Maximum Lateral Deflection: For glass supported on all four edges, limit center-of-glass deflection at design wind pressure to not more than 1/50 times the short-side length or 1 inch (25 mm), whichever is less.
4. Thermal Loads: Design glazing to resist thermal stress breakage induced by differential temperature conditions and limited air circulation within individual glass lites and insulated glazing units.

D. Safety Glazing: Where safety glazing is indicated, provide glazing that complies with 16 CFR 1201, Category II.

E. Thermal and Optical Performance Properties: Provide glass with performance properties specified, as indicated in manufacturer's published test data, based on procedures indicated below:

1. For monolithic-glass lites, properties are based on units with lites 6 mm thick.
2. For insulating-glass units, properties are based on units of thickness indicated for overall unit and for each lite.
3. U-Factors: Center-of-glazing values, in accordance with NFRC 100 and based on most current non-beta version of LBL's WINDOW computer program, expressed as Btu/sq. ft. x h x deg F (W/sq. m x K).
4. SHGC and Visible Transmittance: Center-of-glazing values, in accordance with NFRC 200 and based on most current non-beta version of LBL's WINDOW computer program.
5. Visible Reflectance: Center-of-glazing values, in accordance with NFRC 300.

2.3 GLASS PRODUCTS, GENERAL

A. Glazing Publications: Comply with published recommendations of glass product manufacturers and organizations below unless more stringent requirements are indicated. See these publications for glazing terms not otherwise defined in this Section or in referenced standards.

1. NGA Publications: "Laminated Glazing Reference Manual" and "Glazing Manual."
2. IGMA Publication for Insulating Glass: SIGMA TM-3000, "North American Glazing Guidelines for Sealed Insulating Glass Units for Commercial and Residential Use."

B. Safety Glazing Labeling: Where safety glazing is indicated, permanently mark glazing with certification label of the SGCC or another certification agency acceptable to authorities having jurisdiction. Label shall indicate manufacturer's name, type of glass, thickness, and safety glazing standard with which glass complies.

C. Thickness: Where glass thickness is indicated, it is a minimum. Provide glass that complies with performance requirements and is not less than thickness indicated.

1. Minimum Glass Thickness for Exterior Lites: 6 mm.
2. Thickness of Tinted Glass: Provide same thickness for each tint color indicated throughout Project.

D. Strength: Where annealed float glass is indicated, provide annealed float glass, heat-strengthened float glass, or fully tempered float glass as needed to comply with "Performance Requirements" Article. Where heat-strengthened float glass is indicated, provide heat-strengthened float glass or fully tempered float glass as needed to comply with "Performance Requirements" Article. Where fully tempered float glass is indicated, provide fully tempered float glass.

2.4 GLASS PRODUCTS

A. Clear Annealed Float Glass: ASTM C1036, Type I, Class 1 (clear), Quality-Q3.

B. Fully Tempered Float Glass: ASTM C1048, Kind FT (fully tempered), Condition A (uncoated) unless otherwise indicated, Type I, Class 1 (clear) or Class 2 (tinted) as indicated, Quality-Q3.

1. Fabrication Process: By horizontal (roller-hearth) process with roll-wave distortion parallel to bottom edge of glass as installed unless otherwise indicated.

C. Heat-Strengthened Float Glass: ASTM C1048, Kind HS (heat strengthened), Type I, Condition A (uncoated) unless otherwise indicated, Type I, Class 1 (clear) or Class 2 (tinted) as indicated, Quality-Q3.

1. Fabrication Process: By horizontal (roller-hearth) process with roll-wave distortion parallel to bottom edge of glass as installed unless otherwise indicated.

D. Reflective- and Low-E-Coated Vision Glass: ASTM C1376.

2.5 LAMINATED GLASS

A. Laminated Glass: ASTM C1172. Use materials that have a proven record of no tendency to bubble, discolor, or lose physical and mechanical properties after fabrication and installation.

1. Manufacturers: Subject to compliance with requirements, provide products by one of the following:

   a. Kuraray America, Inc.
   b. Pilkington North America; NSG Group.
   c. Saflex; Eastman.

2. Construction: Laminate glass with polyvinyl butyral interlayer to comply with interlayer manufacturer's written instructions.
3. Interlayer Thickness: Provide thickness not less than that indicated and as needed to comply with requirements.
4. Interlayer Color: Clear unless otherwise indicated.

2.6 INSULATING GLASS

A. Insulating-Glass Units: Factory-assembled units consisting of sealed lites of glass separated by a dehydrated interspace, qualified in accordance with ASTM E2190.

1. Sealing System: Dual seal, with manufacturer's standard primary and secondary sealants.
1. Perimeter Spacer: Manufacturer's standard spacer material and construction, finish listed below:
   a. Aluminum with mill or clear anodic finish.
2. Desiccant: Molecular sieve or silica gel, or a blend of both.

2.7 GLAZING SEALANTS

A. General:

1. Compatibility: Compatible with one another and with other materials they contact, including glass products, seals of insulating-glass units, and glazing channel substrates,

under conditions of service and application, as demonstrated by sealant manufacturer based on testing and field experience.

2. Suitability: Comply with sealant and glass manufacturers' written instructions for selecting glazing sealants suitable for applications indicated and for conditions existing at time of installation.
3. Colors of Exposed Glazing Sealants: As selected by Architect from manufacturer's full range of industry colors.

B. Neutral-Curing Silicone Glazing Sealant, Class 50: Complying with ASTM C920, Type S, Grade NS, Use NT.

2.8 GLAZING TAPES

A. Back-Bedding Mastic Glazing Tapes: Preformed, butyl-based, 100 percent solids elastomeric tape; nonstaining and nonmigrating in contact with nonporous surfaces; with or without spacer rod as recommended in writing by tape and glass manufacturers for application indicated; and complying with ASTM C1281 and AAMA 800 for products indicated below:

1. AAMA 804.3 tape, where indicated.
2. AAMA 806.3 tape, for glazing applications in which tape is subject to continuous pressure.
3. AAMA 807.3 tape, for glazing applications in which tape is not subject to continuous pressure.

B. Expanded Cellular Glazing Tapes: Closed-cell, PVC foam tapes; factory coated with adhesive on both surfaces; and complying with AAMA 800 for the following types:

1. AAMA 810.1, Type 1, for glazing applications in which tape acts as primary sealant.
2. AAMA 810.1, Type 2, for glazing applications in which tape is used in combination with a full bead of liquid sealant.

2.9 MISCELLANEOUS GLAZING MATERIALS

A. General: Provide products of material, size, and shape complying with referenced glazing standard, recommended in writing by manufacturers of glass and other glazing materials for application indicated, and with a proven record of compatibility with surfaces contacted in installation.

B. Cleaners, Primers, and Sealers: Types recommended by sealant or gasket manufacturer.

C. Setting Blocks:

1. EPDM or Silicone with Shore A durometer hardness of 85, plus or minus 5.
2. Type recommended in writing by sealant or glass manufacturer.

D. Spacers:

1. Neoprene blocks or continuous extrusions of hardness required by glass manufacturer to maintain glass lites in place for installation indicated.

E. Edge Blocks:

1. EPDM or Silicone Insert type with Shore A durometer hardness per manufacturer's written instructions.
2. Type recommended in writing by sealant or glass manufacturer.

F. Cylindrical Glazing Sealant Backing: ASTM C1330, Type O (open-cell material), of size and density to control glazing sealant depth and otherwise produce optimum glazing sealant performance.

2.10 FABRICATION OF GLAZING UNITS

A. Fabricate glazing units in sizes required to fit openings indicated for Project, with edge and face clearances, edge and surface conditions, and bite complying with written instructions of product manufacturer and referenced glazing publications, to comply with system performance requirements.

1. Allow for thermal movements from ambient and surface temperature changes acting on glass framing members and glazing components.

a. Temperature Change: 120 deg F (67 deg C), ambient; 180 deg F (100 deg C), material surfaces.

B. Clean-cut or flat-grind vertical edges of butt-glazed monolithic lites to produce square edges with slight chamfers at junctions of edges and faces.

C. Grind smooth and polish exposed glass edges and corners.

PART 3 - EXECUTION

3.1 EXAMINATION

A. Examine framing, glazing channels, and stops, with Installer present, for compliance with the following:

1. Manufacturing and installation tolerances, including those for size, squareness, and offsets at corners.
2. Presence and functioning of weep systems.
3. Minimum required face and edge clearances.
4. Effective sealing between joints of glass-framing members.

B. Proceed with installation only after unsatisfactory conditions have been corrected.

3.2 PREPARATION

A. Clean glazing channels and other framing members receiving glass immediately before glazing. Remove coatings not firmly bonded to substrates.

B. Examine glazing units to locate exterior and interior surfaces. Label or mark units as needed so that exterior and interior surfaces are readily identifiable. Do not use materials that leave visible marks in the completed Work.

3.3 GLAZING, GENERAL

A. Comply with combined written instructions of manufacturers of glass, sealants, gaskets, and other glazing materials, unless more stringent requirements are indicated, including those in referenced glazing publications.

B. Protect glass edges from damage during handling and installation. Remove damaged glass from Project site and legally dispose of off Project site. Damaged glass includes glass with edge damage or other imperfections that, when installed, could weaken glass, impair performance, or impair appearance.

C. Apply primers to joint surfaces where required for adhesion of sealants, as determined by preconstruction testing.

D. Install setting blocks in sill rabbets, sized and located to comply with referenced glazing publications, unless otherwise required by glass manufacturer. Set blocks in thin course of compatible sealant suitable for heel bead.

E. Do not exceed edge pressures stipulated by glass manufacturers for installing glass lites.

F. Provide spacers for glass lites where length plus width is larger than 50 inches (1270 mm).

1. Locate spacers directly opposite each other on both inside and outside faces of glass. Install correct size and spacing to preserve required face clearances, unless gaskets and glazing tapes are used that have demonstrated ability to maintain required face clearances and to comply with system performance requirements.
2. Provide 1/8-inch- (3-mm-) minimum bite of spacers on glass and use thickness equal to sealant width. With glazing tape, use thickness slightly less than final compressed thickness of tape.

G. Provide edge blocking where indicated or needed to prevent glass lites from moving sideways in glazing channel, as recommended in writing by glass manufacturer and in accordance with requirements in referenced glazing publications.

H. Set glass lites in each series with uniform pattern, draw, bow, and similar characteristics.

I. Set glass lites with proper orientation so that coatings face exterior or interior as specified.

J. Where wedge-shaped gaskets are driven into one side of channel to pressurize sealant or gasket on opposite side, provide adequate anchorage so gasket cannot walk out when installation is subjected to movement.

K. Square cut wedge-shaped gaskets at corners and install gaskets in a manner recommended by gasket manufacturer to prevent corners from pulling away; seal corner joints and butt joints with sealant recommended in writing by gasket manufacturer.

3.4 TAPE GLAZING

A. Position tapes on fixed stops so that, when compressed by glass, their exposed edges are flush with or protrude slightly above sightline of stops.

B. Install tapes continuously, but not necessarily in one continuous length. Do not stretch tapes to make them fit opening.

C. Cover vertical framing joints by applying tapes to heads and sills first, then to jambs. Cover horizontal framing joints by applying tapes to jambs, then to heads and sills.

D. Place joints in tapes at corners of opening with adjoining lengths butted together, not lapped. Seal joints in tapes with compatible sealant approved by tape manufacturer.

E. Do not remove release paper from tape until right before each glazing unit is installed.

F. Apply heel bead of elastomeric sealant.

G. Center glass lites in openings on setting blocks, and press firmly against tape by inserting dense compression gaskets formed and installed to lock in place against faces of removable stops. Start gasket applications at corners and work toward centers of openings.

H. Apply cap bead of elastomeric sealant over exposed edge of tape.

3.5 GASKET GLAZING (DRY)

A. Cut compression gaskets to lengths recommended by gasket manufacturer to fit openings exactly, with allowance for stretch during installation.

B. Insert soft compression gasket between glass and frame or fixed stop so it is securely in place with joints miter cut and bonded together at corners.

C. Installation with Drive-in Wedge Gaskets: Center glass lites in openings on setting blocks, and press firmly against soft compression gasket by inserting dense compression gaskets formed and installed to lock in place against faces of removable stops. Start gasket applications at corners and work toward centers of openings. Compress gaskets to produce a weathertight seal without developing bending stresses in glass. Seal gasket joints with sealant recommended in writing by gasket manufacturer.

D. Installation with Pressure-Glazing Stops: Center glass lites in openings on setting blocks, and press firmly against soft compression gasket. Install dense compression gaskets and pressure-glazing stops, applying pressure uniformly to compression gaskets. Compress gaskets to produce a weathertight seal without developing bending stresses in glass. Seal gasket joints with sealant recommended in writing by gasket manufacturer.

E. Install gaskets so they protrude past face of glazing stops.

3.6 SEALANT GLAZING (WET)

A. Install continuous spacers, or spacers combined with cylindrical sealant backing, between glass lites and glazing stops to maintain glass face clearances and to prevent sealant from extruding into glass channel and blocking weep systems until sealants cure. Secure spacers or spacers and backings in place and in position to control depth of installed sealant relative to edge clearance for optimum sealant performance.

B. Force sealants into glazing channels to eliminate voids and to ensure complete wetting or bond of sealant to glass and channel surfaces.

C. Tool exposed surfaces of sealants to provide a substantial wash away from glass.

3.7 CLEANING AND PROTECTION

A. Immediately after installation, remove nonpermanent labels and clean surfaces.

B. Protect glass from contact with contaminating substances resulting from construction operations. Examine glass surfaces adjacent to or below exterior concrete and other masonry surfaces at frequent intervals during construction, but not less than once a month, for buildup of dirt, scum, alkaline deposits, or stains.

1. If, despite such protection, contaminating substances do contact with glass, remove substances immediately as recommended in writing by glass manufacturer. Remove and replace glass that cannot be cleaned without damage to coatings.

C. Remove and replace glass that is damaged during construction period.

D. Wash glass on both exposed surfaces not more than four days before date scheduled for inspections that establish date of Substantial Completion. Wash glass as recommended in writing by glass manufacturer.

3.8 MONOLITHIC GLASS SCHEDULE

A. Clear Glass Type **G3**: Fully Tempered float glass.

1. Minimum Thickness: 6 mm.
2. Safety glazing required.

3.9 LAMINATED GLASS SCHEDULE

A. Glass Type **GL-5**: Laminated clear, tempered, float glass.

1. Thickness of Each Glass Ply: 6.0 mm.
2. Interlayer Thickness: 0.030 inch (0.76 mm).
3. Provide safety glazing labeling.

3.10 INSULATING GLASS SCHEDULE

A. Glass Type **G1**: Low-e-coated, clear insulating glass.

1. Basis-of-Design Product: Vitro Architectural Glass Solarban 70.

2. Overall Unit Thickness: 1 inch (25 mm).
3. Thickness of Each Glass Lite: 6.0 mm.
4. Outdoor Lite: Fully tempered float glass.
5. Tint Color: None.
6. Interspace Content: Argon.
7. Indoor Lite: Fully tempered float glass.
8. Low-E Coating: Pyrolytic on second surface.
9. Visible Light Transmittance: 42 percent minimum.
10. Winter Nighttime U-Factor: 0.46 maximum.
11. Solar Heat Gain Coefficient: 0.25 maximum.
12. Provide safety glazing labeling.

END OF SECTION 088000

SECTION 088300 - MIRRORS

PART 1 - GENERAL

1.1 RELATED DOCUMENTS

A. Drawings and general provisions of the Contract, including General and Supplementary Conditions and Division 01 Specification Sections, apply to this Section.

1.2 SUMMARY

A. Section includes the following types of silvered flat glass mirrors:

1. Annealed monolithic glass mirrors.
2. Tempered glass mirrors qualifying as safety glazing.

B. Related Sections:

1. Division 08 Section "Glazing" for glass with reflective coatings used for vision and spandrel lites.
2. Division 10 Section "Toilet, Bath, and Laundry Accessories" for metal-framed mirrors.

1.3 SUBMITTALS

A. Product Data: For each type of product indicated.

1. Mirrors. Include description of materials and process used to produce each type of silvered flat glass mirror specified that indicates sources of glass, glass coating components, edge sealer, and quality-control provisions.

B. Shop Drawings: Include mirror elevations, edge details, mirror hardware, and attachments to other work.

C. Samples: For each type of the following products:

1. Mirrors: 12 inches square, including edge treatment on two adjoining edges.
2. Mirror Clips: Full size.
3. Mirror Trim: 12 inches long.

D. Qualification Data: For qualified Installer.

E. Product Certificates: For each type of mirror and mirror mastic, from manufacturer.

F. Preconstruction Test Reports: From mirror manufacturer indicating that mirror mastic was tested for compatibility and adhesion with mirror backing and substrates on which mirrors are installed.

G. Maintenance Data: For mirrors to include in maintenance manuals.

H. Warranty: Sample of special warranty.

1.4 QUALITY ASSURANCE

A. Installer Qualifications: A qualified installer who employs glass installers for this Project who are certified under the National Glass Association's Certified Glass Installer Program.

B. Source Limitations for Mirrors: Obtain mirrors from single source from single manufacturer.

C. Source Limitations for Mirror Accessories: Obtain mirror glazing accessories from single source.

D. Glazing Publications: Comply with the following published recommendations:

1. GANA's "Glazing Manual" unless more stringent requirements are indicated. Refer to this publication for definitions of glass and glazing terms not otherwise defined in this Section or in referenced standards.
2. GANA Mirror Division's "Mirrors, Handle with Extreme Care: Tips for the Professional on the Care and Handling of Mirrors."

E. Safety Glazing Products: For tempered mirrors, provide products complying with testing requirements in 16 CFR 1201 for Category II materials.

F. Preconstruction Mirror Mastic Compatibility Test: Submit mirror mastic products to mirror manufacturer for testing to determine compatibility of mastic with mirror backing paint and substrates on which mirrors are installed.

1.5 DELIVERY, STORAGE, AND HANDLING

A. Protect mirrors according to mirror manufacturer's written instructions and as needed to prevent damage to mirrors from moisture, condensation, temperature changes, direct exposure to sun, or other causes.

B. Comply with mirror manufacturer's written instructions for shipping, storing, and handling mirrors as needed to prevent deterioration of silvering, damage to edges, and abrasion of glass surfaces and applied coatings. Store indoors.

1.6 PROJECT CONDITIONS

A. Environmental Limitations: Do not install mirrors until ambient temperature and humidity conditions are maintained at levels indicated for final occupancy.

1.7 WARRANTY

A. Special Warranty: Manufacturer's standard form in which mirror manufacturer agrees to replace mirrors that deteriorate within specified warranty period. Deterioration of mirrors is defined as defects developed from normal use that are not attributed to mirror breakage or to maintaining and cleaning mirrors contrary to manufacturer's written instructions. Defects include discoloration, black spots, and clouding of the silver film.

1. Warranty Period: Five years from date of Substantial Completion.

PART 2 - PRODUCTS

2.1 SILVERED FLAT GLASS MIRRORS

A. Glass Mirrors, General: ASTM C 1503**;** manufactured using copper-free, low-lead mirror coating process.

1. Manufacturers: Subject to compliance with requirements, available manufacturers offering products that may be incorporated into the Work include, but are not limited to, the following:

a. Arch Aluminum & Glass Co., Inc.
b. Avalon Glass and Mirror Company.
c. Binswanger Mirror; a division of Vitro America, Inc.
d. D & W Incorporated
e. Donisi Mirror Company.
f. Gardner Glass, Inc.
g. Gilded Mirrors, Inc.
h. Guardian Industries.
i. Head West.
j. Independent Mirror Industries, Inc.
k. Lenoir Mirror Company.
l. Maran-Wurzell Glass & Mirror.
m. National Glass Industries.
n. Stroupe Mirror Co., Inc.
o. Sunshine Mirror; Westshore Glass Corp.
p. Virginia Mirror Company, Inc.
q. Walker Glass Co., Ltd.

B. Clear Glass: Mirror Glazing Quality[**;** ultraclear (low-iron) float glass with a minimum 91 percent visible light transmission.

1. Nominal Thickness: 4.0 mm.

C. Tempered Clear Glass: Mirror Glazing Quality, for blemish requirements; and comply with ASTM C 1048 for Kind FT, Condition A, tempered float glass before silver coating is applied.

1. Nominal Thickness: 4.0 mm.

2.2 MISCELLANEOUS MATERIALS

A. Setting Blocks: Elastomeric material with a Shore, Type A durometer hardness of 85, plus or minus 5.

B. Edge Sealer: Coating compatible with glass coating and approved by mirror manufacturer for use in protecting against silver deterioration at mirrored glass edges.

C. Mirror Mastic: An adhesive setting compound, asbestos-free, produced specifically for setting mirrors and certified by both mirror manufacturer and mastic manufacturer as compatible with glass coating and substrates on which mirrors will be installed.

1. Manufacturers: Subject to compliance with requirements, available manufacturers offering products that may be incorporated into the Work include, but are not limited to, the following:

a. Franklin International; Titebond Division.
b. Laurence, C. R. Co., Inc.
c. Macco Adhesives; Liquid Nails Division.
d. OSI Sealants, Inc.
e. Palmer Products Corporation.
f. Pecora Corporation.
g. Royal Adhesives & Sealants; Gunther Mirror Mastics Division.
h. Sommer & Maca Industries, Inc.

D. Film Backing for Safety Mirrors: Film backing and pressure-sensitive adhesive; both compatible with mirror backing paint as certified by mirror manufacturer.

2.3 MIRROR HARDWARE

A. Top and Bottom Aluminum J-Channels: Aluminum extrusions with a return deep enough to produce a glazing channel to accommodate mirrors of thickness indicated and in lengths required to cover bottom and top edges of each mirror in a single piece.

1. Bottom Trim: J-channels formed with front leg and back leg not less than 3/8 and 7/8 inch in height, respectively, and a thickness of not less than 0.04 inch.

a. Products: Subject to compliance with requirements, available products that may be incorporated into the Work include, but are not limited to, the following:

1) Laurence, C. R. Co., Inc.; CRL Standard "J" Channel.
2) Sommer & Maca Industries, Inc.; Aluminum Shallow Nose "J" Moulding Lower Bar.
3) Sommer & Maca Industries, Inc.; Heavy Gauge Aluminum Shallow Nose "J" Moulding Lower Bar.

2. Top Trim: J-channels formed with front leg and back leg not less than 5/8 and 1 inch in height, respectively, and a thickness of not less than 0.04 inch.

a. Products: Subject to compliance with requirements, available products that may be incorporated into the Work include, but are not limited to, the following:

1) Laurence, C. R. Co., Inc.; CRL Deep "J" Channel.
2) Sommer & Maca Industries, Inc.; Aluminum Deep Nose "J" Moulding Upper Bar.
3) Sommer & Maca Industries, Inc.; Heavy Gauge Aluminum Deep Nose "J" Moulding Lower Bar.

3. Finish: Clear bright anodized.

B. Top Channel/Cleat and Bottom Aluminum J-Channels: Aluminum extrusions with a return deep enough to produce a glazing channel to accommodate mirrors of thickness indicated and in lengths required to cover bottom and top edges of each mirror in a single piece.

1. Bottom Trim: J-channels formed with front leg and back leg not less than 5/16 and 3/4 inch (7.9 and 19 mm) in height, respectively.

a. Product: Subject to compliance with requirements, provide D638 FHA Type "J" Channel by Laurence, C. R. Co., Inc.

2. Top Trim: Formed with front leg with a height of 5/16 inch and back leg designed to fit into the pocket created by wall-mounted aluminum cleat.

a. Product: Subject to compliance with requirements, provide D 1638 Top Channel and D 1637M Mirror Mount System Cleat by Laurence, C. R. Co., Inc.

3. Finish: Clear bright anodized.

C. Fasteners: Fabricated of same basic metal and alloy as fastened metal and matching it in finished color and texture where fasteners are exposed.

D. Anchors and Inserts: Provide devices as required for mirror hardware installation. Provide toothed or lead-shield expansion-bolt devices for drilled-in-place anchors. Provide galvanized anchors and inserts for applications on inside face of exterior walls and where indicated.

2.4 FABRICATION

A. Mirror Sizes: To suit Project conditions, and before tempering, cut mirrors to final sizes and shapes.

B. Cutouts: Fabricate cutouts before tempering for notches and holes in mirrors without marring visible surfaces. Locate and size cutouts so they fit closely around penetrations in mirrors.

C. Mirror Edge Treatment: Flat polished.

1. Seal edges of mirrors with edge sealer after edge treatment to prevent chemical or atmospheric penetration of glass coating.

2. Require mirror manufacturer to perform edge treatment and sealing in factory immediately after cutting to final sizes.

D. Film-Backed Safety Mirrors: Apply film backing with adhesive coating over mirror backing paint as recommended in writing by film-backing manufacturer to produce a surface free of bubbles, blisters, and other imperfections.

PART 3 - EXECUTION

3.1 EXAMINATION

A. Examine substrates, over which mirrors are to be mounted, with Installer present, for compliance with installation tolerances, substrate preparation, and other conditions affecting performance of the Work.

B. Verify compatibility with and suitability of substrates, including compatibility of mirror mastic with existing finishes or primers.

C. Proceed with installation only after unsatisfactory conditions have been corrected and surfaces are dry.

3.2 PREPARATION

A. Comply with mastic manufacturer's written installation instructions for preparation of substrates, including coating substrates with mastic manufacturer's special bond coating where applicable.

3.3 INSTALLATION

A. General: Install mirrors to comply with mirror manufacturer's written instructions and with referenced GANA publications. Mount mirrors accurately in place in a manner that avoids distorting reflected images.

B. Provide a minimum air space of 1/8 inch between back of mirrors and mounting surface for air circulation between back of mirrors and face of mounting surface.

C. Wall-Mounted Mirrors: Install mirrors with mirror hardware. Attach mirror hardware securely to mounting surfaces with mechanical fasteners installed with anchors or inserts as applicable. Install fasteners so heads do not impose point loads on backs of mirrors.

1. Top and Bottom Aluminum J-Channels: Provide setting blocks 1/8 inch thick by 4 inches long at quarter points. To prevent trapping water, provide, between setting blocks, two slotted weeps not less than 1/4 inch wide by 3/8 inch long at bottom channel.
2. Top Channel/Cleat and Bottom Aluminum J-Channels: Fasten J-channel directly to wall and attach top trim to continuous cleat fastened directly to wall.

3. Mirror Clips: Place a felt or plastic pad between mirror and each clip to prevent spalling of mirror edges. Locate clips so they are symmetrically placed and evenly spaced.
4. Install mastic as follows:

    a. Apply barrier coat to mirror backing where approved in writing by manufacturers of mirrors and backing material.
    b. Apply mastic to comply with mastic manufacturer's written instructions for coverage and to allow air circulation between back of mirrors and face of mounting surface.
    c. After mastic is applied, align mirrors and press into place while maintaining a minimum air space of 1/8 inch between back of mirrors and mounting surface.

3.4 CLEANING AND PROTECTION

A. Protect mirrors from breakage and contaminating substances resulting from construction operations.

B. Do not permit edges of mirrors to be exposed to standing water.

C. Maintain environmental conditions that will prevent mirrors from being exposed to moisture from condensation or other sources for continuous periods of time.

D. Wash exposed surface of mirrors not more than four days before date scheduled for inspections that establish date of Substantial Completion. Wash mirrors as recommended in writing by mirror manufacturer.

END OF SECTION 088300

SECTION 088813 - FIRE-RATED GLAZING

PART 1 - GENERAL

1.1 RELATED DOCUMENTS

A. Drawings and general provisions of the Contract, including General and Supplementary Conditions and Division 01 Specification Sections, apply to this Section.

1.2 SUMMARY

A. Section Includes:

1. Fire-protection-rated glazing.

1.3 DEFINITIONS

A. Glass Manufacturers: Firms that produce primary glass, fabricated glass, or both, as defined in referenced glazing publications.

B. Glass Thicknesses: Indicated by thickness designations in millimeters in accordance with ASTM C1036.

1.4 COORDINATION

A. Coordinate glazing channel dimensions to provide necessary bite on glass, minimum edge and face clearances, and adequate sealant thicknesses, with reasonable tolerances.

1.5 ACTION SUBMITTALS

A. Product Data: For each type of product.

B. Glass Samples: For each type of glass product; 12 inches (300 mm) square.

C. Glazing Schedule: List glass types and thicknesses for each size opening and location. Use same designations indicated on Drawings.

1.6 INFORMATIONAL SUBMITTALS

A. Product Certificates: For each type of glass and glazing product.

B. Sample Warranties: For special warranties.

1.7 QUALITY ASSURANCE

A. Installer Qualifications: A qualified installer who employs glass installers for this Project who are certified under the NGA's Certified Glass Installer Program.

1.8 DELIVERY, STORAGE, AND HANDLING

A. Protect glazing materials in accordance with manufacturer's written instructions. Prevent damage to glass and glazing materials from condensation, temperature changes, direct exposure to sun, or other causes.

1.9 FIELD CONDITIONS

A. Environmental Limitations: Do not deliver or install fire-resistant glazing until spaces are enclosed and weathertight and temporary HVAC system is operating and maintaining ambient temperature conditions at occupancy levels during remainder of construction period.

1.10 WARRANTY

A. Manufacturer's Special Warranty for Laminated Glass: Manufacturer agrees to replace laminated-glass units that deteriorate within specified warranty period. Deterioration of laminated glass is defined as defects developed from normal use that are not attributed to glass breakage or to maintaining and cleaning laminated glass contrary to manufacturer's written instructions. Defects include edge separation, delamination materially obstructing vision through glass, and blemishes exceeding those allowed by referenced laminated-glass standard.

1. Warranty Period: 10 years from date of Substantial Completion.

PART 2 - PRODUCTS

2.1 MANUFACTURERS

A. Source Limitations for Glass: For each glass type, obtain from single source from single manufacturer.

B. Source Limitations for Glazing Accessories: For each product and installation method, obtain from single source from single manufacturer.

2.2 PERFORMANCE REQUIREMENTS

A. General: Installed glazing systems shall withstand normal thermal movement and impact loads (where applicable) without failure, including loss or glass breakage attributable to defective manufacture, fabrication, or installation; deterioration of glazing materials; or other defects in construction.

2.3 GLASS PRODUCTS, GENERAL

A. Glazing Publications: Comply with published recommendations of glass product manufacturers and organization below unless more stringent requirements are indicated. See these publications for glazing terms not otherwise defined in this Section or in referenced standards.

1. NGA Publications: "Laminated Glazing Reference Manual" and "Glazing Manual."

B. Safety Glazing Labeling: Where safety glazing is indicated, permanently mark glazing with certification label of the SGCC or another certification agency acceptable to authorities having jurisdiction or manufacturer. Label shall indicate manufacturer's name, type of glass, glass thickness, and safety glazing standard with which glass complies.

2.4 GLASS PRODUCTS

A. Float Glass: ASTM C1036, Type I, Quality-Q3, Class I (clear) unless otherwise indicated.

B. Ultraclear Float Glass: ASTM C1036, Type I, Quality-Q3, Class I (clear), with visible light transmission not less than 91 percent.

C. Tempered Float Glass: ASTM C1048, Kind FT (fully tempered), Condition A (uncoated) unless otherwise indicated, Type I, Class I (clear) unless otherwise indicated, Quality-Q3.

1. Fabrication Process: By horizontal (roller-hearth) process with roll-wave distortion parallel to bottom edge of glass as installed unless otherwise indicated.

D. Laminated Glass: ASTM C1172. Use materials that have a proven record of no tendency to bubble, discolor, or lose physical and mechanical properties after fabrication and installation.

1. Construction: Laminate glass with polyvinyl butyral interlayer unless fire-protection or fire-resistance rating is based on another product.
2. Interlayer Thickness: Provide thickness as needed to comply with requirements.
3. Interlayer Color: Clear unless otherwise indicated.

2.5 FIRE-PROTECTION-RATED GLAZING

A. Fire-Protection-Rated Glazing: Listed and labeled by a testing agency acceptable to authorities having jurisdiction, for fire-protection ratings indicated, based on positive-pressure testing in accordance with NFPA 257 or UL 9, including hose-stream test, and shall comply with NFPA 80.

1. Fire-protection-rated glazing required to have a fire-protection rating of 45 minutes shall be exempt from hose-stream test.

B. Fire-Protection-Rated Glazing Labeling: Permanently mark fire-protection-rated glazing with certification label of a testing agency acceptable to authorities having jurisdiction. Label shall indicate manufacturer's name; test standard; whether glazing is permitted to be used in doors or openings; if permitted in openings, whether glazing has passed hose-stream test; whether

glazing meets 450 deg F (250 deg C) temperature-rise limitation; and fire-resistance rating in minutes.

C. Fire-Protection-Rated Laminated Ceramic Glazing **G-2**: Laminated glass made from two plies of clear, ceramic glass; 8-mm total thickness; complying with 16 CFR 1201, Category II.

1. Products: Subject to compliance with requirements, provide one of the following:

a. SAFTI FIRST Fire Rated Glazing Solutions; Pyran Platinum L.
b. Technical Glass Products; FireLite Plus®.
c. Vetrotech Saint-Gobain; Keralite Laminated.

2.6 GLAZING ACCESSORIES

A. Provide glazing gaskets, glazing sealants, glazing tapes, setting blocks, spacers, edge blocks, and other glazing accessories that are compatible with glazing products and each other and are approved by testing agencies that listed and labeled fire-resistant glazing products with which products are used for applications and fire-protection ratings indicated.

B. Glazing Sealants for Fire-Rated Glazing Products: Neutral-curing silicone glazing sealant complying with ASTM C920, Type S, Grade NS, Class 50, Use NT. Comply with sealant and glass manufacturers' written instructions for selecting glazing sealants suitable for applications indicated.
1. Colors of Exposed Glazing Sealants: As selected by Architect from manufacturer's full range of industry colors.

C. Back-Bedding Mastic Glazing Tapes: Preformed, butyl-based, 100 percent solids elastomeric tape; nonstaining and nonmigrating in contact with nonporous surfaces; with or without spacer rod as recommended in writing by tape and glass manufacturers for application indicated; and complying with ASTM C1281 and AAMA 800 for products indicated below:

1. AAMA 804.3 tape, where indicated.
2. AAMA 806.3 tape, for glazing applications in which tape is subject to continuous pressure.
3. AAMA 807.3 tape, for glazing applications in which tape is not subject to continuous pressure.

D. Expanded Cellular Glazing Tapes: Closed-cell, PVC foam tapes; factory coated with adhesive on both surfaces; and complying with AAMA 800 for the following types:

1. AAMA 810.1, Type 1, for glazing applications in which tape acts as primary sealant.
2. AAMA 810.1, Type 2, for glazing applications in which tape is used in combination with a full bead of liquid sealant.

2.7 MISCELLANEOUS GLAZING MATERIALS

A. General: Provide products of material, size, and shape complying with referenced glazing standard, recommended in writing by manufacturers of glass and other glazing materials for

application indicated, and with a proven record of compatibility with surfaces contacted in installation.

B. Cylindrical Glazing Sealant Backing: ASTM C1330, Type O (open-cell material), of size and density to control glazing sealant depth and otherwise produce optimum glazing sealant performance.

C. Perimeter Insulation for Fire-Resistance-Rated Glazing: Product that is approved by testing agency that listed and labeled fire-resistant glazing product with which it is used for application and fire-protection rating indicated.

2.8 FABRICATION OF GLAZING UNITS

A. Fabricate glazing units in sizes required to fit openings indicated for Project, with edge and face clearances, edge and surface conditions, and bite complying with written instructions of product manufacturer and referenced glazing publications, to comply with system performance requirements.

PART 3 - EXECUTION

3.1 EXAMINATION

A. Examine framing, glazing channels, and stops, with Installer present, for compliance with manufacturing and installation tolerances, including those for size, squareness, and offsets at corners, and for compliance with minimum required face and edge clearances.

B. Proceed with installation only after unsatisfactory conditions have been corrected.

3.2 PREPARATION

A. Clean glazing channels and other framing members receiving glass immediately before glazing. Remove coatings not firmly bonded to substrates.

B. Examine glazing units to locate fire side and protected side. Label or mark units as needed so that fire side and protected side are readily identifiable. Do not use materials that leave visible marks in the completed Work.

3.3 GLAZING, GENERAL

A. Use methods approved by testing agencies that listed and labeled fire-resistant glazing products.

B. Comply with combined written instructions of manufacturers of glass, sealants, gaskets, and other glazing materials unless more stringent requirements are indicated, including those in referenced glazing publications.

C. Protect glass edges from damage during handling and installation. Remove damaged glass from Project site and legally dispose of off Project site. Damaged glass is glass with edge damage or other imperfections that, when installed, could weaken glass and impair performance and appearance.

D. Apply primers to joint surfaces where required for adhesion of sealants, as determined by preconstruction testing.

E. Install setting blocks in sill rabbets, sized and located to comply with referenced glazing publications unless otherwise required by glass manufacturer. Set blocks in thin course of compatible sealant suitable for heel bead.

F. Do not exceed edge pressures stipulated by glass manufacturers for installing glass lites.

G. Provide spacers for glass lites where length plus width is larger than 50 inches (1270 mm).

1. Locate spacers directly opposite each other on both inside and outside faces of glass. Install correct size and spacing to preserve required face clearances unless gaskets and glazing tapes are used that have demonstrated ability to maintain required face clearances and to comply with system performance requirements.
2. Provide 1/8-inch- (3-mm-) minimum bite of spacers on glass and use thickness equal to sealant width. With glazing tape, use thickness slightly less than final compressed thickness of tape.

H. Provide edge blocking where indicated or needed to prevent glass lites from moving sideways in glazing channel, as recommended in writing by glass manufacturer and in accordance with requirements in referenced glazing publications.

I. Set glass lites with proper orientation so that coatings face fire side or protected side as specified.

J. Where wedge-shaped gaskets are driven into one side of channel to pressurize sealant or gasket on opposite side, provide adequate anchorage so gasket cannot walk out when installation is subjected to movement.

K. Square cut wedge-shaped gaskets at corners and install gaskets in a manner recommended by gasket manufacturer to prevent corners from pulling away; seal corner joints and butt joints with sealant recommended in writing by gasket manufacturer.

3.4 TAPE GLAZING

A. Position tapes on fixed stops so that, when compressed by glass, their exposed edges are flush with or protrude slightly above sightline of stops.

B. Install tapes continuously, but not necessarily in one continuous length. Do not stretch tapes to make them fit opening.

C. Cover vertical framing joints by applying tapes to heads and sills first and then to jambs. Cover horizontal framing joints by applying tapes to jambs and then to heads and sills.

D. Place joints in tapes at corners of opening with adjoining lengths butted together, not lapped. Seal joints in tapes with compatible sealant approved by tape manufacturer.

E. Do not remove release paper from tape until right before each glazing unit is installed.

F. Apply heel bead of elastomeric sealant.

G. Center glass lites in openings on setting blocks and press firmly against tape by inserting dense compression gaskets formed and installed to lock in place against faces of removable stops. Start gasket applications at corners and work toward centers of openings.

H. Apply cap bead of elastomeric sealant over exposed edge of tape.

3.5 GASKET GLAZING (DRY)

A. Cut compression gaskets to lengths recommended by gasket manufacturer to fit openings exactly, with allowance for stretch during installation.

B. Insert soft compression gasket between glass and frame or fixed stop, so it is securely in place with joints miter cut and bonded together at corners.

C. Installation with Drive-in Wedge Gaskets: Center glass lites in openings on setting blocks and press firmly against soft compression gasket by inserting dense compression gaskets formed and installed to lock in place against faces of removable stops. Start gasket applications at corners and work toward centers of openings.

D. Install gaskets so they protrude past face of glazing stops.

3.6 SEALANT GLAZING (WET)

A. Install continuous spacers, or spacers combined with cylindrical sealant backing, between glass lites and glazing stops to maintain glass face clearances. Secure spacers or spacers and backings in place and in position to control depth of installed sealant relative to edge clearance for optimum sealant performance.

B. Force sealants into glazing channels to eliminate voids and to ensure complete wetting or bond of sealant to glass and channel surfaces.

C. Tool exposed surfaces of sealants to provide a substantial washaway from glass.

3.7 CLEANING AND PROTECTION

A. Immediately after installation, remove nonpermanent labels and clean surfaces.

B. Protect glass from contact with contaminating substances resulting from construction operations. Examine glass surfaces adjacent to or below exterior concrete and other masonry surfaces at frequent intervals during construction, but not less than once a month, for buildup of dirt, scum, alkaline deposits, or stains.

1. If, despite such protection, contaminating substances do contact with glass, remove substances immediately as recommended in writing by glass manufacturer.

C. Remove and replace glass that is damaged during construction period.

D. Wash glass on both exposed surfaces not more than four days before date scheduled for inspections that establish date of Substantial Completion. Wash glass as recommended in writing by glass manufacturer.

3.8 FIRE-PROTECTION-RATED GLAZING SCHEDULE

A. Glass Type **GL-5**: 45-minute fire-protection-rated glazing with 450 deg F (250 deg C) temperature-rise limitation in rated doors only, with a maximum vision area of 100 sq. in. (0.065 sq. m); fire-protection-rated laminated ceramic glazing.

END OF SECTION 088813

SECTION 088853 - SECURITY GLAZING

PART 1 - GENERAL

1.1 SUMMARY

A. Section includes:

1. Polycarbonate Security Glazing.

B. Related Requirements:

1.2 DEFINITIONS

A. Glazing Manufacturers: Firms that produce primary glass, monolithic plastic glazing, or fabricated security glazing, as defined in referenced glazing publications.

B. Interspace: Space between lites of air-gap security glazing or insulating security glazing.

1.3 COORDINATION

A. Coordinate glazing channel dimensions to provide necessary bite on security glazing, minimum edge and face clearances, and adequate sealant thicknesses, with reasonable tolerances.

1.4 ACTION SUBMITTALS

A. Product Data: For each type of product.

B. Samples for Initial Selection: Manufacturer's standard color sheets, showing full range of available colors for each type of glass tint.

C. Samples for Verification:

1. Glazing: Actual sample of finished products for each type of security glazing.

   a. Size: Manufacturers' standard size.

2. Glazing Accessories: Actual sample of sealants.
3. Size: Manufacturers' standard size.

D. Security Glazing Schedule: List security glazing types and thicknesses for each size opening and location. Use same designations indicated on Drawings. Indicate coordinated dimensions of security glazing and construction that receives security glazing, including clearances and glazing channel dimensions.

E. Delegated Design Submittal: For security glazing, including analysis data signed and sealed by the qualified professional engineer responsible for their preparation.

1.5 INFORMATIONAL SUBMITTALS

A. Qualification Statements: For installers.

B. Delegated design engineer qualifications.

C. Sample warranties.

1.6 QUALITY ASSURANCE

A. Qualifications:

1. Delegated Design Engineer: A professional engineer who is legally qualified to practice in IL where Project is located and who is experienced in providing engineering services of type indicated.
2. Security Glazing Testing Agency: Subject to compliance with requirements, testing agency is one of the following:

   a. Intertek.
   b. Underwriters Laboratories, Inc.
   c. Wiss, Janney, Elstner Associates, Inc.

3. Sealant Testing Agency: An independent testing agency qualified in accordance with ASTM C1021 to conduct the testing indicated.

1.7 DELIVERY, STORAGE, AND HANDLING

A. Protect security glazing and glazing materials according to manufacturer's written instructions. Prevent damage from condensation, temperature changes, direct exposure to sun, or other causes.

B. Comply with insulating security glazing and with air-gap security glazing manufacturers' written recommendations for venting and sealing units to avoid hermetic seal ruptures due to altitude change.

1.8 FIELD CONDITIONS

A. Environmental Limitations: Do not proceed with glazing when ambient and substrate temperature conditions are outside limits permitted by glazing material manufacturers and when glazing channel substrates are wet from rain, frost, condensation, or other causes.

1. Do not install glazing sealants when ambient and substrate temperature conditions are outside limits permitted by sealant manufacturer or below 40 deg F (4.4 deg C).

1.9 WARRANTY

A. Special Warranty, Laminated-Polycarbonate Security Glazing: Manufacturer agrees to replace laminated-polycarbonate security glazing that fails in materials or workmanship within specified warranty period.

1. Failures include, but are not limited to, the following:

a. Defects developed from normal use that are not attributed to maintaining and cleaning laminated-polycarbonate security glazing contrary to manufacturer's written instructions. Defects include edge separation, delamination materially obstructing vision through glazing, blemishes exceeding those allowed by referenced standard, yellowing, and loss of light transmission.

2. Warranty Period: Five years from date of Substantial Completion.

B. Special Warranty, Laminated-Glass and -Polycarbonate Security Glazing: Manufacturer agrees to replace laminated-glass and -polycarbonate security glazing that fails in materials or workmanship within specified warranty period.

1. Failures include, but are not limited to, the following:
2. Defects developed from normal use that are not attributed to glass breakage or to maintaining and cleaning laminated-glass and -polycarbonate security glazing contrary to manufacturer's written instructions. Defects include edge separation, delamination materially obstructing vision through glazing, blemishes exceeding those allowed by referenced polycarbonate standard, yellowing, and loss of light transmission.
3. Warranty Period: Five years from date of Substantial Completion.

C. Special Warranty, Insulating Security Glazing: Manufacturer agrees to replace insulating security glazing that fails in materials and workmanship within specified warranty period.

1. Failures include, but are not limited to, the following:

a. Defects in individual lites developed from normal use or failure of hermetic seal under normal use. Defects in individual lites or failure of hermetic seal that is attributed to glass breakage or to maintaining and cleaning insulating security glazing contrary to manufacturer's written instructions are not included.
b. Defects in glass-clad polycarbonate lites include edge separation, delamination materially obstructing vision through glazing, blemishes exceeding those allowed by referenced glass-clad polycarbonate standard, yellowing, and loss of light transmission.
c. Evidence of hermetic seal failure is the obstruction of vision by dust, moisture, or film on interior surfaces of glazing.

D. Special Warranty, Air-Gap Security Glazing: Manufacturer agrees to replace air-gap security glazing that fails in materials and workmanship within specified warranty period.

1. Failures include, but are not limited to, the following:

a. Defects in individual lites developed from normal use or failure of hermetic seal under normal use. Defects in individual lites or failure of hermetic seal that is attributed to glass breakage or to maintaining and cleaning air-gap security glazing contrary to manufacturer's written instructions are not included.
b. Defects in laminated-polycarbonate lites include edge separation, delamination materially obstructing vision through glazing, blemishes exceeding those allowed by referenced standard, yellowing, and loss of light transmission.
c. Evidence of hermetic seal failure is the obstruction of vision by dust, moisture, or film on interior surfaces of glazing.

PART 2 - PRODUCTS

2.1 SOURCE LIMITATIONS

A. Obtain each type of security glazing from single source from single manufacturer.

1. Obtain glass from single source from single manufacturer.

B. Obtain glazing sealants from single source from single manufacturer for each product and installation method.

2.2 PERFORMANCE REQUIREMENTS

A. General:
1. Installed security glazing will withstand security-related loads and forces without damage to the glazing beyond that allowed by referenced standards.

B. Delegated Design: Engage a qualified professional engineer, as defined in Section 014000 "Quality Requirements," to design security glazing.

C. Structural Performance: Glazing will withstand the following design loads within limits and under conditions indicated.

1. Design Procedure for Glass: ASTM E1300 and the IBC.

2.3 SECURITY GLAZING, GENERAL

A. Safety Glazing Labeling: Where safety glazing is indicated, permanently mark glazing with certification label of manufacturer. Label will indicate manufacturer's name, type of glazing, glass thickness, and safety glazing standard with which glazing complies.

2.4 POLYCARBONATE SECURITY GLAZING: **G2**

1. Manufacturers: Subject to compliance with requirements, provide products by one of the following:

a. Basis of Design: Total Security Systems LP 1250, clear; or approved equal by:

1) Insulargard Lexgard
Armortex

B. Laminated-Polycarbonate Security Glazing: Two or more polycarbonate sheets bonded with clear urethane interlayer that complies with ASTM C1349, Appendix X2, and has a proven record of no tendency to bubble, discolor, or lose physical and mechanical properties after fabrication and installation. Provide laminated units that comply with requirements of ASTM C1349 for maximum allowable laminating process blemishes and haze.

2.5 GLAZING SEALANTS

A. General:

1. Compatibility: Provide glazing sealants that are compatible with one another and with other materials they contact, including security glazing, seals of insulating security glazing and air-gap security glazing, and glazing channel substrates, under conditions of service and application, as demonstrated by sealant manufacturer based on testing and field experience.
2. Suitability: Comply with sealant and security glazing manufacturers' written instructions for selecting glazing sealants suitable for applications indicated and for conditions existing at time of installation.
3. Colors of Exposed Glazing Sealants: As selected by Architect from manufacturer's full range of Industry colors.

B. Glazing Sealant:

1. Neutral-Curing Silicone Glazing Sealant, Class 25: Complying with ASTM C920, Type S, Grade NS, Use NT.

2.6 GLAZING TAPES

A. Back-Bedding Mastic Glazing Tapes: Preformed, butyl-based, 100 percent solids elastomeric tape; nonstaining and nonmigrating in contact with nonporous surfaces; with or without spacer rod as recommended in writing by tape and security glazing manufacturers for application indicated; and complying with ASTM C1281 and AAMA 800 for products indicated below:

1. AAMA 806.3 tape, for glazing applications in which tape is subject to continuous pressure.
2. AAMA 807.3 tape, for glazing applications in which tape is not subject to continuous pressure.

B. Expanded Cellular Glazing Tapes: Closed-cell, PVC foam tapes; factory coated with adhesive on both surfaces; and complying with AAMA 800 for the following types:

1. AAMA 810.1, Type 1, for glazing applications in which tape acts as the primary sealant.

2. AAMA 810.1, Type 2, for glazing applications in which tape is used in combination with a full bead of liquid sealant.

2.7 MISCELLANEOUS GLAZING MATERIALS

A. General: Provide products of material, size, and shape complying with referenced glazing standard, recommended in writing by manufacturers of security glazing and other glazing materials for application indicated, and with a proven record of compatibility with surfaces contacted in installation.

B. Cleaners, Primers, and Sealers: Types recommended by sealant or gasket manufacturer.

C. Setting Blocks:

1. EPDM with Shore A durometer hardness of 85, plus or minus 5.
2. Type recommended in writing by sealant or glass manufacturer.

D. Spacers:

1. Neoprene blocks or continuous extrusions of hardness required by security glazing manufacturer to maintain security glazing lites in place for installation indicated.
2. Type recommended in writing by sealant or security glazing manufacturer.

E. Edge Blocks:

1. EPDM with Shore A durometer hardness in accordance with manufacturer's written instructions.
2. Type recommended in writing by sealant or security glazing manufacturer.

F. Cylindrical Glazing Sealant Backing: ASTM C1330, Type O (open-cell material), of size and density to control glazing sealant depth and otherwise produce optimum glazing sealant performance.

2.8 FABRICATION OF SECURITY GLAZING

A. Fabricate security glazing in sizes required to fit openings indicated for Project, with edge and face clearances, edge and surface conditions, and bite complying with written instructions of product manufacturer and referenced glazing publications, to comply with system performance requirements.

B. Grind smooth and polish exposed security glazing edges and corners.

PART 3 - EXECUTION

3.1 EXAMINATION

A. Examine framing for security glazing, with Installer present, for compliance with the following:

1. Manufacturing and installation tolerances, including those for size, squareness, and offsets at corners.
2. Presence and functioning of weep system.
3. Minimum required face or edge clearances.
4. Minimum required bite.
5. Effective sealing between joints of framing members.

B. Proceed with installation only after unsatisfactory conditions have been corrected.

3.2 PREPARATION

A. Clean glazing channels and other framing members receiving security glazing immediately before glazing. Remove coatings not firmly bonded to substrates.

B. Examine glazing units to locate exterior and interior surfaces. Label or mark units as needed so that exterior and interior surfaces are readily identifiable. Do not use materials that will leave visible marks in the completed work.

3.3 GLAZING, GENERAL

A. Comply with combined written instructions of manufacturers of security glazing, sealants, gaskets, and other glazing materials unless more stringent requirements are indicated, including those in referenced glazing publications.

B. Protect edges of security glazing from damage during handling and installation. Remove damaged security glazing from Project site and legally dispose of it off Project site. Damaged security glazing includes units with edge or face damage or other imperfections that, when installed, could weaken security glazing and impair performance and appearance.

C. Apply primers to joint surfaces where required for adhesion of sealants, as determined by preconstruction testing.

D. Install setting blocks in sill rabbets, sized and located to comply with referenced glazing publications unless otherwise required by glazing unit manufacturer. Set blocks in thin course of compatible sealant suitable for heel bead.

E. Do not exceed edge pressures stipulated by security glazing manufacturers for installing lites.

F. Provide spacers for security glazing lites where the length plus width is larger than 50 inches (1270 mm).

1. Locate spacers directly opposite each other on both inside and outside faces of security glazing. Install correct size and spacing to preserve required face clearances unless gaskets and glazing tapes are used that have demonstrated ability to maintain required face clearances and to comply with performance requirements.
2. Provide 1/8-inch (3-mm) minimum bite of spacers on glazing lites and use thickness equal to sealant width. With glazing tape, use thickness of slightly less than final compressed thickness of tape.

G. Provide edge blocking where indicated or needed to prevent security glazing from moving sideways in glazing channel, as recommended in writing by security glazing manufacturer and in accordance with requirements in referenced glazing publications.

H. Set security glazing in each series with uniform pattern, draw, bow, and similar characteristics.

I. Set coated security glazing with proper orientation so that coatings and films face exterior or interior as specified.

J. Where wedge-shaped gaskets are driven into one side of channel to pressurize sealant or gasket on opposite side, provide adequate anchorage so gasket cannot walk out when installation is subjected to movement.

K. Square cut wedge-shaped gaskets at corners and install gaskets in a manner recommended by gasket manufacturer to prevent corners from pulling away; seal corner joints and butt joints with sealant recommended in writing by gasket manufacturer.

3.4 TAPE GLAZING

A. Position tapes on fixed stops so that, when compressed by security glazing, their exposed edges are flush with or protrude slightly above sightline of stops.

B. Install tapes continuously, but not necessarily in one continuous length. Do not stretch tapes to make them fit opening.

C. Cover vertical framing joints by applying tapes to heads and sills first and then to jambs. Cover horizontal framing joints by applying tapes to jambs and then to heads and sills.

D. Place joints in tapes at corners of opening with adjoining lengths butted together, not lapped. Seal joints in tapes with compatible sealant approved by tape manufacturer.

E. Do not remove release paper from tape until just before each glazing unit is installed.

F. Apply heel bead of elastomeric sealant.

G. Center security glazing in openings on setting blocks and press firmly against tape by inserting dense compression gaskets formed and installed to lock in place against faces of removable stops. Start gasket applications at corners and work toward centers of openings.

H. Apply cap bead of elastomeric sealant over exposed edge of tape.

3.5 GASKET GLAZING (DRY)

A. Cut compression gaskets to lengths recommended in writing by gasket manufacturer to fit openings exactly, with allowance for stretch during installation.

B. Insert soft compression gasket between glazing unit and frame or fixed stop, so it is securely in place with joints miter cut and bonded together at corners.

C. Installation with Drive-in Wedge Gaskets: Center security glazing in openings on setting blocks and press firmly against soft compression gasket by inserting dense compression gaskets formed and installed to lock in place against faces of removable stops. Start gasket applications at corners and work toward centers of openings. Compress gaskets to produce a weathertight seal without developing bending stresses in security glazing. Seal gasket joints with sealant recommended in writing by gasket manufacturer.

D. Installation with Pressure-Glazing Stops: Center security glazing in openings on setting blocks and press firmly against soft compression gasket. Install dense compression gaskets and pressure-glazing stops, applying pressure uniformly to compression gaskets. Compress gaskets to produce a weathertight seal without developing bending stresses in security glazing. Seal gasket joints with sealant recommended in writing by gasket manufacturer.

E. Install gaskets so they protrude past face of glazing stops.

3.6 SEALANT GLAZING (WET)

A. Install continuous spacers, or spacers combined with cylindrical sealant backing, between security glazing and glazing stops to maintain face clearances and to prevent sealant from extruding into glazing channel and blocking weep systems. Secure spacers, or spacers and backings, in place and in position to control depth of installed sealant relative to edge clearance for optimum sealant performance.

B. Force sealants into glazing channels to eliminate voids and to ensure complete wetting or bond of sealant to security glazing and channel surfaces.

C. Tool exposed surfaces of sealants to provide a substantial wash away from security glazing.

3.7 CLEANING AND PROTECTION

A. Immediately after installation remove nonpermanent labels and clean surfaces.

B. Protect security glazing from contact with contaminating substances resulting from construction operations, including weld splatter. Examine security glazing surfaces adjacent to or below exterior concrete and other masonry surfaces at frequent intervals during construction, but not less than once a month, for buildup of dirt, scum, alkaline deposits, or stains.

1. If, despite such protection, contaminating substances do contact with security glazing, remove substances immediately as recommended in writing by security glazing

manufacturer. Remove and replace security glazing that cannot be cleaned without damage.

C. Wash security glazing on both exposed surfaces not more than four days before date scheduled for inspections that establish date of Substantial Completion. Wash security glazing as recommended in writing by security glazing manufacturer.

3.8 LAMINATED-POLYCARBONATE SECURITY GLAZING SCHEDULE

A. Security Glazing, Type GL2: Laminated polycarbonate.

1. Basis-of-Design Product: Total Security Systems LP 1250;
2. Ballistic Resistance, UL 752: Level 3 in accordance with UL 752.
3. Maximum Overall Unit Thickness: 1.24” (±5%) .

END OF SECTION 088853

SECTION 089000 - LOUVERS AND VENTS

PART 1 - GENERAL

1.1 SUMMARY

A. Section Includes:

1. Fixed, extruded-aluminum louvers with insect screens.

B. Related Sections:

1. Division 04 Section "Concrete Unit Masonry" for installing anchors and other items built into unit masonry.
2. Division 07 Section “Joint Sealants” for perimeter sealant.

1.2 DEFINITIONS

A. Louver Terminology: Definitions of terms for metal louvers contained in AMCA 501 apply to this Section unless otherwise defined in this Section or in referenced standards.

B. Horizontal Louver: Louver with horizontal blades; i.e., the axes of the blades are horizontal.

C. Drainable-Blade Louver: Louver with blades having gutters that collect water and drain it to channels in jambs and mullions, which carry it to bottom of unit and away from opening.

1.3 PERFORMANCE REQUIREMENTS

A. Delegated Design: Design louvers, including comprehensive engineering analysis by a qualified professional engineer, using structural and seismic performance requirements and design criteria indicated.

B. Structural Performance: Louvers shall withstand the effects of gravity loads and the following loads and stresses within limits and under conditions indicated without permanent deformation of louver components, noise or metal fatigue caused by louver blade rattle or flutter, or permanent damage to fasteners and anchors. Wind pressures shall be considered to act normal to the face of the building.

1. Wind Loads: Determine loads based on pressures as indicated on Drawings.

C. Thermal Movements: Allow for thermal movements from ambient and surface temperature changes, without buckling, opening of joints, overstressing of components, failure of connections, or other detrimental effects.

1. Temperature Change (Range): 120 deg F (67 deg C), ambient; 180 deg F (100 deg C), material surfaces.

D. Louver Performance Ratings: Provide louvers complying with requirements specified, as demonstrated by testing manufacturer's stock units identical to those provided, except for length and width according to AMCA 500-L.

1.4 SUBMITTALS

A. Product Data: For each type of product indicated.

1. For louvers specified to bear AMCA seal, include printed catalog pages showing specified models with appropriate AMCA Certified Ratings Seals.

B. Shop Drawings: For louvers and accessories. Include plans, elevations, sections, details, and attachments to other work. Show frame profiles and blade profiles, angles, and spacing.

C. Samples for Initial Selection: For units with factory-applied color finishes.

D. Warranties: Sample of warranty.

1.5 QUALITY ASSURANCE

A. Source Limitations: Obtain louvers and vents from single source from a single manufacturer where indicated to be of same type, design, or factory-applied color finish.

B. Welding: Qualify procedures and personnel according to the following:

1. AWS D1.2/D1.2M, "Structural Welding Code - Aluminum."

C. SMACNA Standard: Comply with recommendations in SMACNA's "Architectural Sheet Metal Manual" for fabrication, construction details, and installation procedures.

1.6 PROJECT CONDITIONS

A. Field Measurements: Verify actual dimensions by field measurements before fabrication.

1.7 WARRANTY

A. Warranty: Manufacturer's standard form in which manufacturer agrees to repair or replace components of louvers and vents that fail in materials or workmanship within specified warranty period.

1. Failures include, but are not limited to, the following:

a. Failure to meet performance requirements.
b. Structural failures including excessive deflection.
c. Water leakage.
d. Deterioration of metals, metal finishes, and other materials beyond normal weathering.

2. Warranty Period: One year from date of Substantial Completion.
3. Warranty Period for Metal Finishes: 10 years from date of Substantial Completion.

PART 2 - PRODUCTS

2.1 MATERIALS

A. Aluminum Extrusions: ASTM B 221 (ASTM B 221M), Alloy 6063-T5, T-52, or T6.

B. Aluminum Sheet: ASTM B 209 (ASTM B 209M), Alloy 3003 or 5005 with temper as required for forming, or as otherwise recommended by metal producer for required finish.

C. Fasteners: Use types and sizes to suit unit installation conditions.

1. For fastening aluminum, use aluminum or 300 series stainless-steel fasteners.
2. For color-finished louvers, use fasteners with heads that match color of louvers.

D. Bituminous Paint: Cold-applied asphalt emulsion complying with ASTM D 1187.

2.2 FABRICATION, GENERAL

A. Assemble louvers in factory to minimize field splicing and assembly. Disassemble units as necessary for shipping and handling limitations. Clearly mark units for reassembly and coordinated installation.

B. Maintain equal louver blade spacing to produce uniform appearance.

C. Fabricate frames, including integral sills, to fit in openings of sizes indicated, with allowances made for fabrication and installation tolerances, adjoining material tolerances, and perimeter sealant joints.

D. Include supports, anchorages, and accessories required for complete assembly.

E. Provide vertical mullions of type and at spacings indicated, but not more than recommended by manufacturer, or 72 inches (1830 mm) o.c., whichever is less.

F. Join frame members to each other and to fixed louver blades with fillet welds concealed from view unless otherwise indicated or size of louver assembly makes bolted connections between frame members necessary.

2.3 FIXED, EXTRUDED-ALUMINUM LOUVERS

A. Horizontal, Continuous line Drainable-Blade Louver with semi-recessed mullions capable of collecting and draining water from blades:

1. Basis-of-Design Product: Subject to compliance with requirements, provide Ruskin; ELF445DX or comparable product by one of the following:

a. Airolite Company, LLC (The).
b. Architectural Louvers
c. Construction Specialties, Inc.
d. Greenheck Fan Corporation.
e. Ruskin Company; Tomkins PLC.

2. Louver Depth: 4 inches (102 mm).
3. Frame and Blade Nominal Thickness: Not less than 0.081 inch (2.1 mm) for blades and frames.
4. Louver Performance Ratings:

a. Free Area: Not less than 50%.

2.4 LOUVER SCREENS

A. General: Provide screen at each exterior louver.

1. Screen Location for Fixed Louvers: Interior face.
2. Screening Type: Insect screening.

B. Secure screen frames to louver frames with stainless-steel machine screws, spaced a maximum of 6 inches (150 mm) from each corner and at 12 inches (300 mm) o.c.

C. Louver Screen Frames: Fabricate with mitered corners to louver sizes indicated.

1. Metal: Same kind and form of metal as indicated for louver to which screens are attached. Reinforce extruded-aluminum screen frames at corners with clips.
2. Finish: Same finish as louver frames to which louver screens are attached.
3. Type: Non-rewirable, U-shaped frames.

D. Louver Screening for Aluminum Louvers:

1. Bird Screening, Aluminum: 1/2-inch- (13-mm-) square mesh, 0.063-inch (1.60-mm) wire.

2.5 FINISHES, GENERAL

A. Comply with NAAMM's "Metal Finishes Manual for Architectural and Metal Products" for recommendations for applying and designating finishes.

2.6 ALUMINUM FINISHES

A. Colored Anodic Finish: AAMA 611, AA-M12C22A41, Class I, 0.018 mm or thicker.

1. Color: Black.

PART 3 - EXECUTION

3.1 EXAMINATION

A. Examine substrates and openings, with Installer present, for compliance with requirements for installation tolerances and other conditions affecting performance.

B. Proceed with installation only after unsatisfactory conditions have been corrected.

3.2 PREPARATION

A. Coordinate setting drawings, diagrams, templates, instructions, and directions for installation of anchorages that are to be embedded in concrete or masonry construction. Coordinate delivery of such items to Project site.

3.3 INSTALLATION

A. Locate and place louvers and vents level, plumb, and at indicated alignment with adjacent work.

B. Use concealed anchorages where possible. Provide brass or lead washers fitted to screws where required to protect metal surfaces and to make a weathertight connection.

C. Form closely fitted joints with exposed connections accurately located and secured.

D. Provide perimeter reveals and openings of uniform width for sealants and joint fillers, as indicated.

E. Repair finishes damaged by cutting, welding, soldering, and grinding. Restore finishes so no evidence remains of corrective work. Return items that cannot be refinished in the field to the factory, make required alterations, and refinish entire unit or provide new units.

F. Protect unpainted galvanized and nonferrous-metal surfaces that will be in contact with concrete, masonry, or dissimilar metals from corrosion and galvanic action by applying a heavy coating of bituminous paint or by separating surfaces with waterproof gaskets or nonmetallic flashing.

G. Install concealed gaskets, flashings, joint fillers, and insulation as louver installation progresses, where weathertight louver joints are required. Comply with Division 07 Section "Joint Sealants" for sealants applied during louver installation.

3.4 ADJUSTING AND CLEANING

A. Clean exposed surfaces of louvers and vents that are not protected by temporary covering, to remove fingerprints and soil during construction period. Do not let soil accumulate during construction period.

B. Before final inspection, clean exposed surfaces with water and a mild soap or detergent not harmful to finishes. Thoroughly rinse surfaces and dry.

C. Restore louvers and vents damaged during installation and construction so no evidence remains of corrective work. If results of restoration are unsuccessful, as determined by Architect, remove damaged units and replace with new units.

END OF SECTION 089000

SECTION 092216 - NON-STRUCTURAL METAL FRAMING

PART 1 - GENERAL

1.1 RELATED DOCUMENTS

A. Drawings and general provisions of the Contract, including General and Supplementary Conditions and Division 01 Specification Sections, apply to this Section.

1.2 SUMMARY

A. Section Includes:

1. Non-load-bearing steel framing systems for interior partitions.
2. Suspension systems for interior ceilings and soffits.
3. Grid suspension systems for gypsum board ceilings.

B. Related Requirements:

1. Section 054000 "Cold-Formed Metal Framing" for exterior and interior load-bearing and exterior non-load-bearing wall studs; floor joists; roof rafters and ceiling joists; and roof trusses.

1.3 ACTION SUBMITTALS

A. Product Data: For each type of product.

B. Evaluation Reports: For embossed steel studs and tracks firestop tracks, post-installed anchors and power-actuated fasteners, from ICC-ES or other qualified testing agency acceptable to authorities having jurisdiction.

1.4 QUALITY ASSURANCE

A. Code-Compliance Certification of Studs and Tracks: Provide documentation that framing members are certified according to the product-certification program of the Certified Steel Stud Association, the Steel Framing Industry Association or the Steel Stud Manufacturers Association.

PART 2 - PRODUCTS

2.1 PERFORMANCE REQUIREMENTS

A. Fire-Test-Response Characteristics: For fire-resistance-rated assemblies that incorporate non-load-bearing steel framing, provide materials and construction identical to those tested in assembly indicated, according to ASTM E 119 by an independent testing agency.

B. Horizontal Deflection: For wall assemblies, limited to 1/360 of the wall height based on horizontal loading of 5 lbf/sq. ft. (239 Pa).

2.2 FRAMING SYSTEMS

A. Recycled Content of Steel Products: Postconsumer recycled content plus one-half of preconsumer recycled content not less than 25 percent.

B. Framing Members, General: Comply with ASTM C 754 for conditions indicated.

1. Steel Sheet Components: Comply with ASTM C 645 requirements for metal unless otherwise indicated.
2. Protective Coating: ASTM A 653/A 653M, G60 (Z180), hot-dip galvanized unless otherwise indicated.

C. Studs and Runners: ASTM C 645. Use either steel studs and runners or embossed steel studs and runners.

1. Steel Studs and Runners:
   a. Minimum Base-Metal Thickness: 0.0329 inch (0.836 mm), 20 Gauge.
   b. Depth: As indicated on Drawings.

D. Embossed, High Strength Steel Studs and Tracks **(AT STC 40 RATED WALLS)**: Roll-formed and embossed with surface deformations to stiffen the framing members so that they are structurally comparable to conventional ASTM C645 steel studs and tracks.

   a. Minimum Base-Steel Thickness: 0.0190 inch (18 or 19 mil), 70 ksi.
   b. Depth: As indicated on Drawings.

E. Slip-Type Head Joints: Where indicated, provide one of the following:

1. Single Long-Leg Runner System: ASTM C 645 top runner with 2-inch- (51-mm-) deep flanges in thickness not less than indicated for studs, installed with studs friction fit into top runner and with continuous bridging located within 12 inches (305 mm) of the top of studs to provide lateral bracing.
2. Deflection Track: Steel sheet top runner manufactured to prevent cracking of finishes applied to interior partition framing resulting from deflection of structure above; in thickness not less than indicated for studs and in width to accommodate depth of studs.

F. Firestop Tracks: Top runner manufactured to allow partition heads to expand and contract with movement of structure while maintaining continuity of fire-resistance-rated assembly indicated; in thickness not less than indicated for studs and in width to accommodate depth of studs.

1. Products: Subject to compliance with requirements, provide one of the following:

a. Blazeframe Industries; Intumescent Framing, Fire Stop System.
b. ClarkDietrich Building Systems; BlazeFrame.
c. Fire Trak Corp; Fire Trak System attached to studs with Fire Trak Posi Klip.
d. Metal-Lite; The System.

G. Flat Strap and Backing Plate: Steel sheet for blocking and bracing in length and width indicated.
1. Minimum Base-Metal Thickness: 16 gauge.

H. Cold-Rolled Channel Bridging: Steel, 0.0538-inch (1.367-mm) minimum base-metal thickness, with minimum 1/2-inch- (13-mm-) wide flanges.
1. Depth: As indicated on Drawings.
2. Clip Angle: Not less than 1-1/2 by 1-1/2 inches (38 by 38 mm), 0.068-inch- (1.72-mm-) thick, galvanized steel.

I. Hat-Shaped, Rigid Furring Channels: ASTM C 645.
1. Minimum Base-Metal Thickness: 0.0329 inch (0.836 mm).
2. Depth: As indicated on Drawings.

J. Z-Shaped Furring: With slotted or nonslotted web, face flange of 1-1/4 inches (32 mm), wall attachment flange of 7/8 inch (22 mm), minimum uncoated-metal thickness of 0.0359 inch – 20 gauge, and depth required to fit insulation thickness indicated.

2.3 SUSPENSION SYSTEMS

A. Tie Wire: ASTM A 641/A 641M, Class 1 zinc coating, soft temper, 0.062-inch- (1.59-mm-) diameter wire, or double strand of 0.048-inch- (1.21-mm-) diameter wire.

B. Hanger Attachments to Concrete:

1. Expansion Anchors: Fabricated from corrosion-resistant materials, with allowable load or strength design capacities calculated according to ICC-ES AC193 and ACI 318 greater than or equal to the design load, as determined by testing per ASTM E 488/E 488M conducted by a qualified testing agency.
2. Power-Actuated Anchors: Fastener system of type suitable for application indicated, fabricated from corrosion-resistant materials, with allowable load capacities calculated according to ICC-ES AC70, greater than or equal to the design load, as determined by testing per ASTM E 1190 conducted by a qualified testing agency.

C. Wire Hangers: ASTM A 641/A 641M, Class 1 zinc coating, soft temper, 0.16 inch (4.12 mm) in diameter.

D. Furring Channels (Furring Members):

1. Cold-Rolled Channels: 0.0538-inch (1.367-mm) uncoated-steel thickness, with minimum 1/2-inch- (13-mm-) wide flanges, 3/4 inch (19 mm) deep.
2. Steel Studs and Runners: ASTM C 645.

    a. Minimum Base-Metal Thickness: 0.0329 inch (0.836 mm).
    b. Depth: 1-5/8 inches (41 mm) 2-1/2 inches (64 mm) 3-5/8 inches (92 mm).

3. Hat-Shaped, Rigid Furring Channels: ASTM C 645, 7/8 inch (22 mm) deep.

    a. Minimum Base-Metal Thickness: 0.0329 inch (0.836 mm).

E. Grid Suspension System for Gypsum Board Ceilings: ASTM C 645, direct-hung system composed of main beams and cross-furring members that interlock.

1. Products: Subject to compliance with requirements, provide one of the following:

    a. Armstrong World Industries, Inc; Drywall Grid Systems.
    b. Chicago Metallic Corporation; 640/660 Drywall Ceiling Suspension.
    c. United States Gypsum Company; Drywall Suspension System.

2.4 AUXILIARY MATERIALS

A. General: Provide auxiliary materials that comply with referenced installation standards.

1. Fasteners for Metal Framing: Of type, material, size, corrosion resistance, holding power, and other properties required to fasten steel members to substrates.

B. Isolation Strip at Exterior Walls: Provide one of the following:

1. Asphalt-Saturated Organic Felt: ASTM D 226/D 226M, Type I (No. 15 asphalt felt), nonperforated.
2. Foam Gasket: Adhesive-backed, closed-cell vinyl foam strips that allow fastener penetration without foam displacement, 1/8 inch (3.2 mm) thick, in width to suit steel stud size.

PART 3 - EXECUTION

3.1 EXAMINATION

A. Examine areas and substrates, with Installer present, and including welded hollow-metal frames, cast-in anchors, and structural framing, for compliance with requirements and other conditions affecting performance of the Work.

B. Proceed with installation only after unsatisfactory conditions have been corrected.

3.2 PREPARATION

A. Suspended Assemblies: Coordinate installation of suspension systems with installation of overhead structure to ensure that inserts and other provisions for anchorages to building structure have been installed to receive hangers at spacing required to support the Work and that hangers will develop their full strength.

1. Furnish concrete inserts and other devices indicated to other trades for installation in advance of time needed for coordination and construction.

3.3 INSTALLATION, GENERAL

A. Installation Standard: ASTM C 754.
1. Gypsum Board Assemblies: Also comply with requirements in ASTM C 840 that apply to framing installation.

B. Install framing and accessories plumb, square, and true to line, with connections securely fastened.

C. Install supplementary framing, and blocking to support fixtures, equipment services, heavy trim, grab bars, toilet accessories, furnishings, or similar construction.

D. Install bracing at terminations in assemblies.

E. Do not bridge building control and expansion joints with non-load-bearing steel framing members. Frame both sides of joints independently.

3.4 INSTALLING FRAMED ASSEMBLIES

A. Install framing system components according to spacings indicated, but not greater than spacings required by referenced installation standards for assembly types.

1. Single-Layer Application: 16 inches (406 mm) o.c. unless otherwise indicated.
2. Multilayer Application: 16 inches (406 mm) o.c. unless otherwise indicated.
3. Tile Backing Panels: 16 inches (406 mm) o.c. unless otherwise indicated.

B. Where studs are installed directly against exterior masonry walls or dissimilar metals at exterior walls, install isolation strip between studs and exterior wall.

C. Install studs so flanges within framing system point in same direction.

D. Install tracks (runners) at floors and overhead supports. Extend framing full height to structural supports or substrates above suspended ceilings except where partitions are indicated to terminate at suspended ceilings. Continue framing around ducts that penetrate partitions above ceiling.

1. Slip-Type Head Joints: Where framing extends to overhead structural supports, install to produce joints at tops of framing systems that prevent axial loading of finished assemblies.
2. Door Openings: Screw vertical studs at jambs to jamb anchor clips on door frames; install runner track section (for cripple studs) at head and secure to jamb studs.

    a. Install two studs at each jamb unless otherwise indicated.
    b. Install cripple studs at head adjacent to each jamb stud, with a minimum 1/2-inch (13-mm) clearance from jamb stud to allow for installation of control joint in finished assembly.
    c. Extend jamb studs through suspended ceilings and attach to underside of overhead structure.

3. Other Framed Openings: Frame openings other than door openings the same as required for door openings unless otherwise indicated. Install framing below sills of openings to match framing required above door heads.
4. Fire-Resistance-Rated Partitions: Install framing to comply with fire-resistance-rated assembly indicated and support closures and to make partitions continuous from floor to underside of solid structure.

    a. Firestop Track: Where indicated, install to maintain continuity of fire-resistance-rated assembly indicated.

5. Sound-Rated Partitions: Install framing to comply with sound-rated assembly indicated.
    a. Fill void between track and metal deck with mineral wool.

E. Direct Furring:
1. Attach to concrete or masonry with stub nails, screws designed for masonry attachment, or powder-driven fasteners spaced 24 inches (610 mm) o.c.

F. Installation Tolerance: Install each framing member so fastening surfaces vary not more than 1/8 inch (3 mm) from the plane formed by faces of adjacent framing.

3.5 INSTALLING CEILING SUSPENSION SYSTEMS

A. Install suspension system components according to spacings indicated, but not greater than spacings required by referenced installation standards for assembly types.

1. Hangers: 48 inches (1219 mm) o.c.
2. Carrying Channels (Main Runners): 48 inches (1219 mm) o.c.
3. Furring Channels (Furring Members): 16 inches (406 mm) o.c.

B. Isolate suspension systems from building structure where they abut or are penetrated by building structure to prevent transfer of loading imposed by structural movement.

C. Suspend hangers from building structure as follows:

1. Install hangers plumb and free from contact with insulation or other objects within ceiling plenum that are not part of supporting structural or suspension system.

a. Splay hangers only where required to miss obstructions and offset resulting horizontal forces by bracing, countersplaying, or other equally effective means.

2. Where width of ducts and other construction within ceiling plenum produces hanger spacings that interfere with locations of hangers required to support standard suspension system members, install supplemental suspension members and hangers in the form of trapezes or equivalent devices.

   a. Size supplemental suspension members and hangers to support ceiling loads within 1/360.

3. Wire Hangers: Secure by looping and wire tying, either directly to structures or to inserts, eye screws, or other devices and fasteners that are secure and appropriate for substrate, and in a manner that will not cause hangers to deteriorate or otherwise fail.
4. Flat Hangers: Secure to structure, including intermediate framing members, by attaching to inserts, eye screws, or other devices and fasteners that are secure and appropriate for structure and hanger, and in a manner that will not cause hangers to deteriorate or otherwise fail.
5. Do not attach hangers to steel roof deck.
6. Do not attach hangers to permanent metal forms. Furnish cast-in-place hanger inserts that extend through forms.
7. Do not attach hangers to rolled-in hanger tabs of composite steel floor deck.
8. Do not connect or suspend steel framing from ducts, pipes, or conduit.

D. Fire-Resistance-Rated Assemblies: Wire tie furring channels to supports.

E. Grid Suspension Systems: Attach perimeter wall track or angle where grid suspension systems meet vertical surfaces. Mechanically join main beam and cross-furring members to each other and butt-cut to fit into wall track.

F. Installation Tolerances: Install suspension systems that are level to within 1/8 inch in 12 feet (3 mm in 3.6 m) measured lengthwise on each member that will receive finishes and transversely between parallel members that will receive finishes.

END OF SECTION 092216

SECTION 092900 - GYPSUM BOARD

PART 1 - GENERAL

1.1 RELATED DOCUMENTS

A. Drawings and general provisions of the Contract, including General and Supplementary Conditions and Division 01 Specification Sections, apply to this Section.

1.2 SUMMARY

A. Section Includes:

1. Interior gypsum board.
2. Specialty gypsum products
3. Sound Attenuation blanket.
4. Tile backing panels.
5. Security lath/mesh.

B. Related Requirements:
1. Section 061600 "Sheathing" for gypsum sheathing for exterior walls.
2. Section 092216 "Non-Structural Metal Framing" for non-structural steel framing and suspension systems that support gypsum board panels.
3. Section 093013 "Ceramic Tiling" for cementitious backer units installed as substrates for ceramic tile.

1.3 ACTION SUBMITTALS

A. Product Data: For each type of product.

B. Samples: For the following products:

1. Trim Accessories: Full-size Sample in 12-inch- (300-mm-) long length for each trim accessory indicated.

1.4 DELIVERY, STORAGE AND HANDLING

A. Store materials inside under cover and keep them dry and protected against weather, condensation, direct sunlight, construction traffic, and other potential causes of damage. Stack panels flat and supported on risers on a flat platform to prevent sagging.

1.5 FIELD CONDITIONS

A. Environmental Limitations: Comply with ASTM C 840 requirements or gypsum board manufacturer's written instructions, whichever are more stringent.

B. Do not install paper-faced gypsum panels until installation areas are enclosed and conditioned.

C. Do not install panels that are wet, moisture damaged, and mold damaged.

1. Indications that panels are wet or moisture damaged include, but are not limited to, discoloration, sagging, or irregular shape.
2. Indications that panels are mold damaged include, but are not limited to, fuzzy or splotchy surface contamination and discoloration.

PART 2 - PRODUCTS

2.1 PERFORMANCE REQUIREMENTS

A. Fire-Resistance-Rated Assemblies: For fire-resistance-rated assemblies, provide materials and construction identical to those tested in assembly indicated according to ASTM E 119 by an independent testing agency.

2.2 GYPSUM BOARD, GENERAL

A. Size: Provide maximum lengths and widths available that will minimize joints in each area and that correspond with support system indicated.

2.3 INTERIOR GYPSUM BOARD

A. Gypsum Board, Type X: ASTM C 1396/C 1396M.
1. Products: Subject to compliance with requirements, provide one of the following:
a. Georgia-Pacific Building Products; ToughRock Fireguard Gypsum Board
b. National Gypsum Company; Gold Bond Fire-Shield Wallboard.
c. USG Corporation; USG Sheetrock® Brand Firecode® X Gypsum Panels.

2. Thickness: 5/8 inch (15.9 mm).

3. Long Edges: Tapered and featured (rounded or beveled) for prefilling.

B. Gypsum Ceiling Board: ASTM C 1396/C 1396M.
1. Thickness: 1/2 inch (12.7 mm).
2. Long Edges: Tapered.

C. Impact-Resistant Gypsum Board: ASTM C 1396/C 1396M gypsum board, tested according to ASTM C 1629/C 1629M.

1. Products: Subject to compliance with requirements, provide one of the following:

a. CertainTeed Corporation; Saint-Gobain North America; CertainTeed Extreme Impact Resistant drywall with M2Tech.
b. National Gypsum Company; Gold Bond Hi Impact XP.
c. United States Gypsum Company; USG Sheetrock® Brand Mold Tough® VHI (Very High Impact) Firecode® Core.

2. Core: 5/8 inch (15.9 mm), Type X.
3. Long Edges: Tapered.
4. Mold Resistance: ASTM D 3273, score of 10 as rated according to ASTM D 3274.

2.4 SPECIALTY GYPSUM BOARD

A. Acoustically Enhanced Gypsum Board: ASTM C 1396/C 1396M. Multilayer products constructed of two layers of gypsum boards sandwiching a viscoelastic sound-absorbing polymer core.

1. Products: Subject to compliance with requirements, provide one of the following:

a. CertainTeed Corporation; SilentFX.
b. National Gypsum Company; SoundBreak XP.
c. Quiet Solution; Quiet Rock.

2. Core: 5/8 inch (15.9 mm), Type X.

3. Long Edges: Tapered.

2.5 TILE BACKING PANELS

A. Cementitious Backer Units: ANSI A118.9 and ASTM C 1288 or ASTM C 1325, with manufacturer's standard edges.

1. Products: Subject to compliance with requirements, provide one of the following:

a. Custom Building Products; Wonderboard.
b. National Gypsum Company; PermaBase BRAND Cement Board.
c. United States Gypsum Company; USG Durock® Brand Cement Board.

2. Thickness: 1/2 inch.

3. Mold Resistance: ASTM D 3273, score of 10 as rated according to ASTM D 3274.

2.6 TRIM ACCESSORIES

A. Interior Trim: ASTM C 1047.

1. Material: Galvanized or aluminum-coated steel sheet or rolled zinc, or plastic.
2. Shapes:

a. Cornerbead.
b. Bullnose bead.
c. LC-Bead: J-shaped; exposed long flange receives joint compound.
d. L-Bead: L-shaped; exposed long flange receives joint compound.
e. U-Bead: J-shaped; exposed short flange does not receive joint compound.
f. Expansion (control) joint.
g. Curved-Edge Cornerbead: With notched or flexible flanges.

B. Exterior Trim: ASTM C 1047.

1. Material: Hot-dip galvanized-steel sheet, plastic, or rolled zinc.
2. Shapes:

a. Cornerbead.
b. LC-Bead: J-shaped; exposed long flange receives joint compound.
c. Expansion (Control) Joint: One-piece, rolled zinc with V-shaped slot and removable strip covering slot opening.

C. Aluminum Trim: Extruded accessories of profiles and dimensions indicated.

1. Basis-of-Design Product: Subject to compliance with requirements, provide Fry Reglet Corporation; or a comparable product by one of the following:

a. Flannery, Inc.
b. Gordon, Inc.
c. Pittcon Industries.

2. Aluminum: Alloy and temper with not less than the strength and durability properties of ASTM B 221 (ASTM B 221M), Alloy 6063-T5.
3. Finish: Clear anodized.

2.7 JOINT TREATMENT MATERIALS

A. General: Comply with ASTM C 475/C 475M.

B. Joint Tape:

1. Interior Gypsum Board: Paper.
2. Glass-Mat Gypsum Sheathing Board: 10-by-10 glass mesh.
3. Tile Backing Panels: As recommended by panel manufacturer.

C. Joint Compound for Interior Gypsum Board: For each coat, use formulation that is compatible with other compounds applied on previous or for successive coats.

1. Prefilling: At open joints, rounded or beveled panel edges, and damaged surface areas, use setting-type taping compound.
2. Embedding and First Coat: For embedding tape and first coat on joints, fasteners, and trim flanges, use drying-type, all-purpose compound.

a. Use setting-type compound for installing paper-faced metal trim accessories.

3. Fill Coat: For second coat, use drying-type, all-purpose compound.
4. Finish Coat: For third coat, use setting-type, sandable topping compound.

D. Joint Compound for Tile Backing Panels:
1. Cementitious Backer Units: As recommended by backer unit manufacturer.

2.8 AUXILIARY MATERIALS

A. General: Provide auxiliary materials that comply with referenced installation standards and manufacturer's written instructions.

B. Laminating Adhesive: Adhesive or joint compound recommended for directly adhering gypsum panels to continuous substrate.

C. Steel Drill Screws: ASTM C 1002 unless otherwise indicated.

1. Use screws complying with ASTM C 954 for fastening panels to steel members from 0.033 to 0.112 inch (0.84 to 2.84 mm) thick.
2. For fastening cementitious backer units, use screws of type and size recommended by panel manufacturer.

D. Sound-Attenuation Blankets: ASTM C 665, Type I (blankets without membrane facing) produced by combining thermosetting resins with mineral fibers manufactured from glass, slag wool, or rock wool.

1. Fire-Resistance-Rated Assemblies: Comply with mineral-fiber requirements of assembly.

E. Acoustical Sealant: Manufacturer's standard nonsag, paintable, nonstaining latex sealant complying with ASTM C 834. Product effectively reduces airborne sound transmission through perimeter joints and openings in building construction as demonstrated by testing representative assemblies according to ASTM E 90.

1. Products: Subject to compliance with requirements, provide one of the following:

a. Franklin International; Titebond GREENchoice Professional Acoustical Smoke & Sound Sealant.
b. Hilti, Inc.; CP 506 Smoke and Acoustical Sealant.
c. Pecora Corporation; AC-20 FTR.
d. Specified Technologies, Inc.; Smoke N Sound Acoustical Sealant.

F. Putty Pads: Fire resistant acoustical putty pad, minimum 1/8 inch thick.

G. Security Lath/Mesh: Expanded metal sheet, carbon steel.

1. Basis-of-Design Product: Subject to compliance with requirements, provide Amico Security Mesh ASM .75-13F or a comparable product by Clark Dietrich.

a. Clark Dietrich: BM75.

PART 3 - EXECUTION

3.1 EXAMINATION

A. Examine areas and substrates including welded hollow-metal frames and support framing, with Installer present, for compliance with requirements and other conditions affecting performance of the Work.

B. Examine panels before installation. Reject panels that are wet, moisture damaged, and mold damaged.

C. Proceed with installation only after unsatisfactory conditions have been corrected.

3.2 APPLYING AND FINISHING PANELS, GENERAL

A. Comply with ASTM C 840.

B. Install ceiling panels across framing to minimize the number of abutting end joints and to avoid abutting end joints in central area of each ceiling. Stagger abutting end joints of adjacent panels not less than one framing member.

C. Install panels with face side out. Butt panels together for a light contact at edges and ends with not more than 1/16 inch (1.5 mm) of open space between panels. Do not force into place.

D. Locate edge and end joints over supports, except in ceiling applications where intermediate supports or gypsum board back-blocking is provided behind end joints. Do not place tapered edges against cut edges or ends. Stagger vertical joints on opposite sides of partitions. Do not make joints other than control joints at corners of framed openings.

E. Form control and expansion joints with space between edges of adjoining gypsum panels.

F. Cover both faces of support framing with gypsum panels in concealed spaces (above ceilings, etc.), except in chases braced internally.

1. Unless concealed application is indicated or required for sound, fire, air, or smoke ratings, coverage may be accomplished with scraps of not less than 8 sq. ft. (0.7 sq. m) in area.
2. Fit gypsum panels around ducts, pipes, and conduits.
3. Where partitions intersect structural members projecting below underside of floor/roof slabs and decks, cut gypsum panels to fit profile formed by structural members; allow 1/4- to 3/8-inch- (6.4- to 9.5-mm-) wide joints to install sealant.

G. Isolate perimeter of gypsum board applied to non-load-bearing partitions at structural abutments. Provide 1/4- to 1/2-inch- (6.4- to 12.7-mm-) wide spaces at these locations and trim

edges with edge trim where edges of panels are exposed. Seal joints between edges and abutting structural surfaces with acoustical sealant.

H. Attachment to Steel Framing: Attach panels so leading edge or end of each panel is attached to open (unsupported) edges of stud flanges first.

I. STC-Rated Assemblies: Seal construction at perimeters, behind control joints, and at openings and penetrations with a continuous bead of acoustical sealant. Install acoustical sealant at both faces of partitions at perimeters and through penetrations. Comply with ASTM C 919 and with manufacturer's written instructions for locating edge trim and closing off sound-flanking paths around or through assemblies, including sealing partitions above acoustical ceilings.
   1. Include at all walls that have sound attenuation blankets.
   2. Include at all walls that have acoustically enhanced gypsum board.
   3. Provide putty pads at all electrical, low voltage, and data back boxes at walls that have sound attenuation blankets or acoustically enhanced gypsum board.
   4. “Castle” cut top of gypsum board to follow profile of metal deck where acoustically enhanced gypsum board is used, or where 19 mil, 70 ksi studs are used.

J. Install sound attenuation blankets before installing gypsum panels unless blankets are readily installed after panels have been installed on one side.

3.3 APPLYING INTERIOR GYPSUM BOARD

A. Install interior gypsum board in the following locations:
   1. Type X: Where required for fire-resistance-rated assembly and Vertical surfaces unless otherwise indicated.
   2. Ceiling Type: Ceiling surfaces.
   3. Impact-Resistant Type: As indicated on Drawings.
   4. Acoustically Enhanced Type: As indicated on Drawings.

B. Single-Layer Application:

   1. On ceilings, apply gypsum panels before wall/partition board application to greatest extent possible and at right angles to framing unless otherwise indicated.
   2. On partitions/walls, apply gypsum panels vertically (parallel to framing) unless otherwise indicated or required by fire-resistance-rated assembly, and minimize end joints.

      a. Stagger abutting end joints not less than one framing member in alternate courses of panels.
      b. At stairwells and other high walls, install panels horizontally unless otherwise indicated or required by fire-resistance-rated assembly.
   3. Fastening Methods: Apply gypsum panels to supports with steel drill screws.

C. Multilayer Application:

   1. On ceilings, apply gypsum board indicated for base layers before applying base layers on walls/partitions; apply face layers in same sequence. Apply base layers at right angles to framing members and offset face-layer joints one framing member, 16 inches (400 mm)

minimum, from parallel base-layer joints, unless otherwise indicated or required by fire-resistance-rated assembly.

2. On partitions/walls, apply gypsum board indicated for base layers and face layers vertically (parallel to framing) with joints of base layers located over stud or furring member and face-layer joints offset at least one stud or furring member with base-layer joints unless otherwise indicated or required by fire-resistance-rated assembly. Stagger joints on opposite sides of partitions.
3. Fastening Methods: Fasten base layers and face layers separately to supports with screws.

3.4 APPLYING TILE BACKING PANELS

A. Cementitious Backer Units: ANSI A108.11, at showers, tubs, and where indicated and locations indicated to receive tile.

B. Where tile backing panels abut other types of panels in same plane, shim surfaces to produce a uniform plane across panel surfaces.

3.5 INSTALLING TRIM ACCESSORIES

A. General: For trim with back flanges intended for fasteners, attach to framing with same fasteners used for panels. Otherwise, attach trim according to manufacturer's written instructions.

B. Control Joints: Install control joints according to ASTM C 840 and in specific locations approved by Architect for visual effect. Review with Architect prior to installation.

C. Interior Trim: Install in the following locations:

1. Cornerbead: Use at outside corners.
2. LC-Bead: Use at exposed panel edges.
3. Curved-Edge Cornerbead: Use at curved openings.

D. Aluminum Trim: Install in locations indicated on Drawings.

3.6 FINISHING GYPSUM BOARD

A. General: Treat gypsum board joints, interior angles, edge trim, control joints, penetrations, fastener heads, surface defects, and elsewhere as required to prepare gypsum board surfaces for decoration. Promptly remove residual joint compound from adjacent surfaces.

B. Prefill open joints, rounded or beveled edges, and damaged surface areas.

C. Apply joint tape over gypsum board joints, except for trim products specifically indicated as not intended to receive tape.

D. Gypsum Board Finish Levels: Finish panels to levels indicated below and according to ASTM C 840:

1. Level 1: Ceiling plenum areas, concealed areas, and where indicated.
2. Level 2: Panels that are substrate for tile.
3. Level 4: At panel surfaces that will be exposed to view unless otherwise indicated.

    a. Primer and its application to surfaces are specified in Section 099123 "Interior Painting."

4. Level 5: Where indicated on Drawings.

    a. Primer and its application to surfaces are specified in Section 099123 "Interior Painting."

E. Cementitious Backer Units: Finish according to manufacturer's written instructions.

3.7 PROTECTION

A. Protect adjacent surfaces from drywall compound and promptly remove from floors and other non-drywall surfaces. Repair surfaces stained, marred, or otherwise damaged during drywall application.

B. Protect installed products from damage from weather, condensation, direct sunlight, construction, and other causes during remainder of the construction period.

C. Remove and replace panels that are wet, moisture damaged, and mold damaged.

1. Indications that panels are wet or moisture damaged include, but are not limited to, discoloration, sagging, or irregular shape.
2. Indications that panels are mold damaged include, but are not limited to, fuzzy or splotchy surface contamination and discoloration.

END OF SECTION 092900

SECTION 093000 - TILING

PART 1 - GENERAL

1.1 RELATED DOCUMENTS

A. Drawings and general provisions of the Contract, including General and Supplementary Conditions and Division 01 Specification Sections, apply to this Section.

1.2 SUMMARY

A. Section Includes:

1. Porcelain tile and Base.
2. Crack isolation and Waterproofing membrane.
3. Metal edge strips.

B. Related Sections:

1. Section 079200 "Joint Sealants" for sealing of expansion, contraction, control, and isolation joints in tile surfaces.

1.3 DEFINITIONS

A. General: Definitions in the ANSI A108 series of tile installation standards and in ANSI A137.1 apply to Work of this Section unless otherwise specified.

B. ANSI A108 Series: ANSI A108.01, ANSI A108.02, ANSI A108.1A, ANSI A108.1B, ANSI A108.1C, ANSI A108.4, ANSI A108.5, ANSI A108.6, ANSI A108.8, ANSI A108.9, ANSI A108.10, ANSI A108.11, ANSI A108.12, ANSI A108.13, ANSI A108.14, ANSI A108.15, ANSI A108.16, and ANSI A108.17, which are contained in "American National Standard Specifications for Installation of Ceramic Tile."

C. Module Size: Actual tile size plus joint width indicated.

D. Face Size: Actual tile size, excluding spacer lugs.

1.4 PERFORMANCE REQUIREMENTS

A. Static Coefficient of Friction: For tile installed on walkway surfaces, provide products with the following values as determined by testing identical products per ASTM C 1028:

1. Level Surfaces: Minimum 0.6.
2. Step Treads: Minimum 0.6.
3. Ramp Surfaces: Minimum 0.8.

1.5 ACTION SUBMITTALS

A. Product Data: For each type of product indicated.

B. Shop Drawings: Show locations of each type of tile and tile pattern. Show widths, details, and locations of expansion, contraction, control, and isolation joints in tile substrates and finished tile surfaces.

C. Samples for Initial Selection: For each type of grout indicated. Include Samples of accessories involving color selection.

D. Samples for Verification:

1. Full-size units of each type and composition of tile and for each color and finish required. For ceramic mosaic tile in color blend patterns, provide full sheets of each color blend.
2. Metal edge strips in 6-inch (150-mm) lengths.

1.6 INFORMATIONAL SUBMITTALS

A. Qualification Data: For qualified Installer.

B. Master Grade Certificates: For each shipment, type, and composition of tile, signed by tile manufacturer and Installer.

C. Product Certificates: For each type of product, signed by product manufacturer.

D. Material Test Reports: For each tile-setting and -grouting product.

1.7 MAINTENANCE MATERIAL SUBMITTALS

A. Furnish extra materials that match and are from same production runs as products installed and that are packaged with protective covering for storage and identified with labels describing contents.

1. Tile and Trim Units: Furnish quantity of full-size units equal to 3 percent of amount installed for each type, composition, color, pattern, and size indicated.
2. Grout: Furnish quantity of grout equal to 3 percent of amount installed for each type, composition, and color indicated.

1.8 QUALITY ASSURANCE

A. Source Limitations for Tile: Obtain tile of each type and color or finish from one source or producer.

1. Obtain tile of each type and color or finish from same production run and of consistent quality in appearance and physical properties for each contiguous area.

B. Source Limitations for Setting and Grouting Materials: Obtain ingredients of a uniform quality for each mortar, adhesive, and grout component from one manufacturer and each aggregate from one source or producer.

C. Source Limitations for Other Products: Obtain each of the following products specified in this Section from a single manufacturer for each product:

1. Waterproof membrane.
2. Crack isolation membrane.
3. Joint sealants.
4. Metal edge strips.

1.9 WARRANTY

A. Special Warranty: Manufacturer agrees to repair or replace components of tiling system that fail in materials within specified warranty period.
1. Warranty Period: 10 year Commercial System Limited Warranty from date of Substantial Completion.

B. Special Project Warranty: Submit Installer's warranty, signed by Installer, covering the Work of this Section, including all components of tiling system, for the following warranty period:

1. Warranty Period: Two years from date of Substantial Completion.

1.10 DELIVERY, STORAGE, AND HANDLING

A. Deliver and store packaged materials in original containers with seals unbroken and labels intact until time of use. Comply with requirements in ANSI A137.1 for labeling tile packages.

B. Store tile and cementitious materials on elevated platforms, under cover, and in a dry location.

C. Store aggregates where grading and other required characteristics can be maintained and contamination can be avoided.

D. Store liquid materials in unopened containers and protected from freezing.

E. Handle tile that has temporary protective coating on exposed surfaces to prevent coated surfaces from contacting backs or edges of other units. If coating does contact bonding surfaces of tile, remove coating from bonding surfaces before setting tile.

1.11 PROJECT CONDITIONS

A. Environmental Limitations: Do not install tile until construction in spaces is complete and ambient temperature and humidity conditions are maintained at the levels indicated in referenced standards and manufacturer's written instructions.

PART 2 - PRODUCTS

2.1 PRODUCTS, GENERAL

A. ANSI Ceramic Tile Standard: Provide tile that complies with ANSI A137.1 for types, compositions, and other characteristics indicated.

1. Provide tile complying with Standard grade requirements unless otherwise indicated.

B. ANSI Standards for Tile Installation Materials: Provide materials complying with ANSI A108.02, ANSI standards referenced in other Part 2 articles, ANSI standards referenced by TCA installation methods specified in tile installation schedules, and other requirements specified.

C. Factory-Applied Temporary Protective Coating: Protect exposed surfaces of tile against adherence of mortar and grout by precoating with continuous film of petroleum paraffin wax, applied hot. Do not coat unexposed tile surfaces.

2.2 TILE PRODUCTS

A. Refer to Interior Finish Schedule on the Drawings for basis of design tile and related product selections.

2.3 CRACK ISOLATION AND WATERPROOFING MEMBRANE

A. General: Manufacturer's standard product that complies with ANSI A118.12 and ANSI A118.10 for standard performance and is recommended by the manufacturer for the application indicated. Include reinforcement and accessories recommended by manufacturer.

B. Fluid-Applied Membrane: System consisting of liquid-latex rubber or elastomeric polymer and fabric reinforcement.

1. Products: Subject to compliance with requirements, provide one of the following:

a. Custom Building Products; 9240 Waterproofing and Anti-Fracture Membrane.
b. Laticrete International, Inc.; Hydro Barrier Plus.
c. MAPEI Corporation; Mapelastic Aquadefense.

2.4 SETTING MATERIALS

A. Latex-Portland Cement Mortar (Thin-set): ANSI A118.4.

1. Manufacturers: Subject to compliance with requirements, provide products by one of the following:
a. Custom Building Products.
b. Laticrete International, Inc.
c. MAPEI Corporation.

d. TEC; a subsidiary of H. B. Fuller Company.

2. Provide prepackaged, dry-mortar mix containing dry, re-dispersible, vinyl acetate or acrylic additive to which only water must be added at Project site, or prepackaged dry-mortar mix combined with acrylic resin or styrene-butadiene-rubber liquid-latex additive.
3. For wall applications, provide mortar that complies with requirements for non-sagging mortar in addition to the other requirements in ANSI A118.4.

B. Improved Modified Dry-Set Mortar (Thinset): ANSI A118.15. (For large format tiles)
1. Manufacturers: Subject to compliance with requirements, provide products by one of the following:
a. Custom Building Products.
b. Laticrete International, Inc.
c. MAPEI Corporation; UltraFlex 3.
2. Provide prepackaged, dry-mortar mix combined with acrylic resin or styrene-butadiene-rubber liquid-latex additive at Project site.
3. For wall applications, provide mortar that complies with requirements for nonsagging mortar in addition to the other requirements in ANSI A118.15.

2.5 GROUT MATERIALS

A. Polymer-Modified Tile Grout: ANSI A118.7.

1. Manufacturers: Subject to compliance with requirements, provide products by one of the following:
a. Custom Building Products.
b. Laticrete International, Inc.
c. MAPEI Corporation.

2. Polymer Type: Ethylene vinyl acetate or acrylic additive, in dry, re-dispersible form, prepackaged with other dry ingredients, or polymer Type: Acrylic resin in liquid-latex form for addition to prepackaged dry-grout mix.

2.6 ELASTOMERIC SEALANTS

A. General: Provide sealants, primers, backer rods, and other sealant accessories that comply with the following requirements and with the applicable requirements in Section 079200 "Joint Sealants."

1. Use primers, backer rods, and sealant accessories recommended by sealant manufacturer.

B. Colors: Provide colors of exposed sealants to match colors of grout in tile adjoining sealed joints unless otherwise indicated.

C. One-Part, Mildew-Resistant Silicone Sealant: ASTM C 920; Type S; Grade NS; Class 25; Uses NT, G, A, and, as applicable to nonporous joint substrates indicated, O; formulated with fungicide, intended for sealing interior ceramic tile joints and other nonporous substrates that are subject to in-service exposures of high humidity and extreme temperatures.

1. Products: Subject to compliance with requirements, provide one of the following:

   a. Dow Corning Corporation; Dow Corning 786.
   b. GE Silicones; a division of GE Specialty Materials; Sanitary 1700.
   c. Laticrete International, Inc.; Latasil Tile & Stone Sealant.
   d. Pecora Corporation; Pecora 898 Sanitary Silicone Sealant.

D. Multipart, Pourable Urethane Sealant for Use T: ASTM C 920; Type M; Grade P; Class 25; Uses T, M, A, and, as applicable to joint substrates indicated, O.

1. Products: Subject to compliance with requirements, provide one of the following:

   a. BASF; Sonneborn Sonolastic SL 2.
   b. Pecora Corporation; NR-200 Urexpan.
   c. Sika Corporation; Sikaflex-2c SL.
   d. Tremco Incorporated.; Vulkem 245.

2.7 MISCELLANEOUS MATERIALS

A. Trowelable Underlayments and Patching Compounds: Latex-modified, portland cement-based formulation provided or approved by manufacturer of tile-setting materials for installations indicated.

B. Metal Edge Strips: Angle or L-shape, height to match tile and setting-bed thickness, metallic or combination of metal and PVC or neoprene base, designed specifically for flooring applications; stainless-steel, ASTM A 666, 300 Series exposed-edge material. Refer to drawings for specific proposed product per each application.
   a. Outside Corners: Preformed aluminum shape.
      1) Schluter Systems; Jolly at outside edges.
   b. Floor Transitions: Preformed aluminum shape.
      1) Schluter Systems: RENO-RAMP/-K or RENO-U as required.

C. Temporary Protective Coating: Either product indicated below that is formulated to protect exposed surfaces of tile against adherence of mortar and grout; compatible with tile, mortar, and grout products; and easily removable after grouting is completed without damaging grout or tile.

1. Petroleum paraffin wax, fully refined and odorless, containing at least 0.5 percent oil with a melting point of 120 to 140 deg F (49 to 60 deg C) per ASTM D 87.
2. Grout release in form of manufacturer's standard proprietary liquid coating that is specially formulated and recommended for use as temporary protective coating for tile.

D. Tile Cleaner: A neutral cleaner capable of removing soil and residue without harming tile and grout surfaces, specifically approved for materials and installations indicated by tile and grout manufacturers.

2.8 MIXING MORTARS AND GROUT

A. Mix mortars and grouts to comply with referenced standards and mortar and grout manufacturers' written instructions.

B. Add materials, water, and additives in accurate proportions.

C. Obtain and use type of mixing equipment, mixer speeds, mixing containers, mixing time, and other procedures to produce mortars and grouts of uniform quality with optimum performance characteristics for installations indicated.

PART 3 - EXECUTION

3.1 EXAMINATION

A. Examine substrates, areas, and conditions where tile will be installed, with Installer present, for compliance with requirements for installation tolerances and other conditions affecting performance of installed tile.

1. Verify that substrates for setting tile are firm, dry, clean, free of coatings that are incompatible with tile-setting materials including curing compounds and other substances that contain soap, wax, oil, or silicone; and comply with flatness tolerances required by ANSI A108.01 for installations indicated.
2. Verify that concrete substrates for tile floors installed with thin-set mortar comply with surface finish requirements in ANSI A108.01 for installations indicated.

    a. Verify that surfaces that received a steel trowel finish have been mechanically scarified.
    b. Verify that protrusions, bumps, and ridges have been removed by sanding or grinding.

3. Verify that installation of grounds, anchors, recessed frames, electrical and mechanical units of work, and similar items located in or behind tile has been completed.
4. Verify that joints and cracks in tile substrates are coordinated with tile joint locations; if not coordinated, adjust joint locations in consultation with Architect.

B. Proceed with installation only after unsatisfactory conditions have been corrected.

3.2 PREPARATION

A. Fill cracks, holes, and depressions in concrete substrates for tile floors installed with thin-set mortar with trowelable leveling and patching compound specifically recommended by tile-setting material manufacturer.

B. Where indicated, prepare substrates to receive waterproofing by applying a reinforced mortar bed that complies with ANSI A108.1A and is sloped 1/4 inch per foot (1:50) toward drains.

C. Blending: For tile exhibiting color variations, verify that tile has been factory blended and packaged so tile units taken from one package show same range of colors as those taken from other packages and match approved Samples. If not factory blended, either return to manufacturer or blend tiles at Project site before installing.

D. Field-Applied Temporary Protective Coating: If needed to prevent grout from staining or adhering to exposed tile surfaces, precoat them with continuous film of temporary protective coating, taking care not to coat unexposed tile surfaces.

3.3 TILE INSTALLATION

A. Comply with TCA's "Handbook for Ceramic Tile Installation" for TCA installation methods specified in tile installation schedules. Comply with parts of the ANSI A108 Series "Specifications for Installation of Ceramic Tile" that are referenced in TCA installation methods, specified in tile installation schedules, and apply to types of setting and grouting materials used.

1. For the following installations, follow procedures in the ANSI A108 Series of tile installation standards for providing 95 percent mortar coverage:

a. Tile floors in wet areas.
b. Tile floors composed of tiles 8 by 8 inches (200 by 200 mm) or larger.
c. Tile floors composed of rib-backed tiles.

B. Extend tile work into recesses and under or behind equipment and fixtures to form complete covering without interruptions unless otherwise indicated. Terminate work neatly at obstructions, edges, and corners without disrupting pattern or joint alignments.

C. Accurately form intersections and returns. Perform cutting and drilling of tile without marring visible surfaces. Carefully grind cut edges of tile abutting trim, finish, or built-in items for straight aligned joints. Fit tile closely to electrical outlets, piping, fixtures, and other penetrations so plates, collars, or covers overlap tile.

D. Provide manufacturer's standard trim shapes where necessary to eliminate exposed tile edges.

E. Jointing Pattern: Lay tile in grid pattern unless otherwise indicated. Lay out tile work and center tile fields in both directions in each space or on each wall area. Lay out tile work to minimize the use of pieces that are less than half of a tile. Provide uniform joint widths unless otherwise indicated.

1. Where adjoining tiles on floor, base, walls, or trim are specified or indicated to be same size, align joints.
2. Where tiles are specified or indicated to be whole integer multiples of adjoining tiles on floor, base, walls, or trim, align joints unless otherwise indicated.

F. Joint Widths: Provide minimum joint width as recommended by tile manufacturer.

G. Lay out tile wainscots to dimensions indicated or to next full tile beyond dimensions indicated.

H. Expansion Joints: Provide expansion joints and other sealant-filled joints, including control, contraction, and isolation joints, where indicated. Form joints during installation of setting materials, mortar beds, and tile. Do not saw-cut joints after installing tiles.

1. Where joints occur in concrete substrates, locate joints in tile surfaces directly above them.
2. Prepare joints and apply sealants to comply with requirements in Section 079200 "Joint Sealants."

I. Metal Edge Strips: Install at locations indicated and where exposed edge of tile flooring meets carpet, wood, or other flooring that finishes flush with or below top of tile and no threshold is indicated.

3.4 WATERPROOFING CRACK ISOLATION MEMBRANE INSTALLATION

A. Install waterproofing/crack isolation membrane to comply with ANSI A108.13 and manufacturer's written instructions to produce membrane of uniform thickness that is bonded securely to substrate.

B. Allow membrane to cure and verify by testing that it is watertight before installing tile or setting materials over it.

C. Do not install tile or setting materials over membrane until membrane has cured.

D. Provide membrane under all floor tile locations.

3.5 CLEANING AND PROTECTING

A. Cleaning: On completion of placement and grouting, clean all ceramic tile surfaces so they are free of foreign matter.

1. Remove epoxy grout residue from tile as soon as possible.
2. Clean grout smears and haze from tile according to tile and grout manufacturer's written instructions but no sooner than 10 days after installation. Use only cleaners recommended by tile and grout manufacturers and only after determining that cleaners are safe to use by testing on samples of tile and other surfaces to be cleaned. Protect metal surfaces and plumbing fixtures from effects of cleaning. Flush surfaces with clean water before and after cleaning.
3. Remove temporary protective coating by method recommended by coating manufacturer and that is acceptable to tile and grout manufacturer. Trap and remove coating to prevent drain clogging.

B. Protect installed tile work with kraft paper or other heavy covering during construction period to prevent staining, damage, and wear. If recommended by tile manufacturer, apply coat of neutral protective cleaner to completed tile walls and floors.

C. Prohibit foot and wheel traffic from tiled floors for at least seven days after grouting is completed.

D. Before final inspection, remove protective coverings and rinse neutral protective cleaner from tile surfaces.

3.6 INTERIOR TILE INSTALLATION SCHEDULE

A. Interior Wall Installations, Metal Studs or Furring:

1. Tile Installation W244C: Thin-set mortar on cementitious backer units; TCA W244C.

a. Tile Type: As indicated on the Interior Finish Schedule.
b. Thin-Set Mortar: Latex- portland cement mortar.
1) Improved Modified Dry-Set Mortar (Thinset) ANSI A118.4. ANSI A118.15. (For large format tiles)
c. Grout: Polymer Modified Latex. ANSI A118.7.

B. Interior Wall Installations, Masonry or Concrete:

1. Tile Installation W202I: Thin-set mortar; TCA W202I.

a. Tile Type: As indicated on the Interior Finish Schedule.
1) Modified Dry-Set Mortar (Thinset): ANSI A118.4; or Improved Modified Dry-Set Mortar (Thinset): ANSI A118.15. (For large format tiles)
b. Grout: Polymer Modified Latex. ANSI A118.7

C. Interior Floor Installations, Concrete Subfloor:

1. TCNA F113: Thinset mortar.

a. Ceramic Tile Type: As indicated on the Interior Finish Schedule.
1) Thinset Mortar: Improved modified dry-set mortar. ANSI A118.15. (For large format tiles)
b. Grout: Polymer Modified sanded grout.

END OF SECTION 093000

SECTION 09 30 13 - CERAMIC TILING

PART 1 - GENERAL

1.1 SUMMARY

A. Section Includes:

1. Ceramic mosaic tile.
2. Glazed wall tile.
3. Waterproof membranes.
4. Crack isolation membranes.
5. Porcelain paver floor tiles

B. Related Requirements:

1. Section 07 92 00 "Joint Sealants" for sealing of expansion, contraction, control, and isolation joints in tile surfaces.
2. Section 09 29 00 "Gypsum Board" for cementitious backer units and glass-mat, water-resistant backer board.

1.2 DEFINITIONS

A. General: Definitions in the ANSI A108 series of tile installation standards and in ANSI A137.1 apply to Work of this Section unless otherwise specified.

B. Face Size: Actual tile size, excluding spacer lugs.

C. Module Size: Actual tile size plus joint width indicated.

1.3 ACTION SUBMITTALS

A. Product Data: For each type of product.

B. Shop Drawings: Show locations of each type of tile and tile pattern. Show widths, details, and locations of expansion, contraction, control, and isolation joints in tile substrates and finished tile surfaces.

C. Samples for Verification:

1. Full-size units of each type and composition of tile and for each color and finish required. For ceramic mosaic tile in color blend patterns, provide full sheets of each color blend.
2. Full-size units of each type of trim and accessory for each color and finish required.
3. Metal edge strips in 6-inch (150-mm) lengths.

1.4 INFORMATIONAL SUBMITTALS

A. Qualification Data: For Installer.

B. Product Certificates: For each type of product.

1.5 MAINTENANCE MATERIAL SUBMITTALS

A. Furnish extra materials that match and are from same production runs as products installed and that are packaged with protective covering for storage and identified with labels describing contents.

1. Tile and Trim Units: Furnish quantity of full-size units equal to 3 percent of amount installed for each type, composition, color, pattern, and size indicated.

1.6 QUALITY ASSURANCE

A. Installer Qualifications:

1. Installer is a Five-Star member of the National Tile Contractors Association or a Trowel of Excellence member of the Tile Contractors' Association of America.
2. Installer employs at least one installer for Project that has completed the Advanced Certification for Tile Installers (ACT) certification for installation of membranes.

1.7 DELIVERY, STORAGE, AND HANDLING

A. Deliver and store packaged materials in original containers with seals unbroken and labels intact until time of use. Comply with requirements in ANSI A137.1 for labeling tile packages.

B. Store tile and cementitious materials on elevated platforms, under cover, and in a dry location.

C. Store aggregates where grading and other required characteristics can be maintained and contamination can be avoided.

D. Store liquid materials in unopened containers and protected from freezing.

1.8 FIELD CONDITIONS

A. Environmental Limitations: Do not install tile until construction in spaces is complete and ambient temperature and humidity conditions are maintained at the levels indicated in referenced standards and manufacturer's written instructions.

PART 2 - PRODUCTS

2.1 MANUFACTURERS

A. Source Limitations for Tile: Obtain tile of each type and color or finish from single source or producer.

1. Obtain tile of each type and color or finish from same production run and of consistent quality in appearance and physical properties for each contiguous area.
2. Glazed Wall Tile:
   a. Daltile Corporation.
   b. United States Ceramic Tile Company.
   c. American Olean Tile Co., Inc.
   d. Interceramic USA.
3. Floor Tile:
   a. Daltile Corporation.
   b. United States Ceramic Tile Company.
   c. American Olean Tile Co., Inc.
   d. Interceramic USA.
4. Porcelain Pavers:
   a. Cerim-Floor Gres Ceramiche (TZ-1)

B. Source Limitations for Setting and Grouting Materials: Obtain ingredients of a uniform quality for each mortar, adhesive, and grout component from single manufacturer and each aggregate from single source or producer.

1. Obtain setting and grouting materials, except for unmodified Portland cement and aggregate, from single manufacturer.
2. Mortars and Grouts:
   a. Laticrete International, Inc.

C. Source Limitations for Other Products: Obtain each of the following products specified in this Section from a single manufacturer:

1. Waterproof membrane.
2. Crack isolation membrane.

2.2 PRODUCTS, GENERAL

A. ANSI Ceramic Tile Standard: Provide tile that complies with ANSI A137.1 for types, compositions, and other characteristics indicated.

1. Provide tile complying with Standard grade requirements unless otherwise indicated.

B. ANSI Standards for Tile Installation Materials: Provide materials complying with ANSI A108.02, ANSI standards referenced in other Part 2 articles, ANSI standards referenced by TCNA installation methods specified in tile installation schedules, and other requirements specified.

C. Ceramic Tile Flooring shall be stable, firm, slip resistant per CBC Section 11B-302.1.

D. Factory Blending: For tile exhibiting color variations within ranges, blend tile in factory and package so tile units taken from one package show same range in colors as those taken from other packages and match approved Samples.

E. Mounting: For factory-mounted tile, provide back- or edge-mounted tile assemblies as standard with manufacturer unless otherwise indicated.

2.3 TILE PRODUCTS

A. Floor Tile Types **CT-2, TZ-1**:

1. Basis-of-Design Product: Subject to compliance with requirements, provide product indicated on Drawings or comparable product, approved by Architect.
2. Grout Color: As selected by Architect from manufacturer's full range.

B. Wall Tile Types **CT-1, CT-3, CT-4**:

1. Basis-of-Design Product: Subject to compliance with requirements, provide product indicated on Drawings or comparable product, approved by Architect.
2. Grout Color: As selected by Architect from manufacturer's full range.

3. Trim Units **TB-1**: Coordinated with sizes and coursing of adjoining flat tile where applicable and matching characteristics of adjoining flat tile. Provide shapes as follows, selected from manufacturer's standard shapes:

   a. Basis-of-Design Product: Subject to compliance with requirements, provide product indicated on Drawings or comparable product, approved by Architect.
   b. Grout Color: Match grout for wall tile.

2.4 WATERPROOF MEMBRANES

A. General: Manufacturer's standard product that complies with ANSI A118.10 and is recommended by the manufacturer for the application indicated. Include reinforcement and accessories recommended by manufacturer.

B. Waterproof Membrane, Fabric-Reinforced, Fluid-Applied: System consisting of liquid-latex rubber or elastomeric polymer and continuous fabric reinforcement.

1. Manufacturers: Subject to compliance with requirements, provide products by one of the following:

   a. Bostik, Inc.
   b. Custom Building Products.
   c. H.B. Fuller Construction Products Inc. / TEC.
   d. Laticrete International, Inc.
   e. MAPEI Corporation.

2.5 CRACK ISOLATION MEMBRANES

A. General: Manufacturer's standard product that complies with ANSI A118.12 for standard performance and is recommended by the manufacturer for the application indicated. Include reinforcement and accessories recommended by manufacturer.

B. Crack Isolation Membrane, Fabric-Reinforced, Fluid-Applied: System consisting of liquid-latex rubber or elastomeric polymer and fabric reinforcement.

1. Manufacturers: Subject to compliance with requirements, provide products by one of the following:

   a. Bostik, Inc.
   b. Custom Building Products.
   c. H.B. Fuller Construction Products Inc. / TEC.
   d. Laticrete International, Inc.
   e. MAPEI Corporation.

2.6 SETTING MATERIALS

A. Modified Dry-Set Mortar (Thinset): ANSI A118.4.

1. Manufacturers: Subject to compliance with requirements, provide products by one of the following:

   a. Bostik, Inc.
   b. Custom Building Products.
   c. H.B. Fuller Construction Products Inc. / TEC.
   d. Laticrete International, Inc.
   e. MAPEI Corporation.

2. For wall applications, provide mortar that complies with requirements for nonsagging mortar in addition to the other requirements in ANSI A118.4.

2.7 GROUT MATERIALS

A. Sand-Portland Cement Grout: ANSI A108.10, consisting of white or gray cement and white or colored aggregate as required to produce color indicated.

B. Standard Cement Grout: ANSI A118.6.

1. Manufacturers: Subject to compliance with requirements, provide products by one of the following:

   a. Bostik, Inc.
   b. Custom Building Products.
   c. H.B. Fuller Construction Products Inc. / TEC.
   d. Laticrete International, Inc.
   e. MAPEI Corporation.

C. Water-Cleanable Epoxy Grout: ANSI A118.3.

1. Manufacturers: Subject to compliance with requirements, provide products by one of the following:

a. Bostik, Inc.
b. Custom Building Products.
c. H.B. Fuller Construction Products Inc. / TEC.
d. Laticrete International, Inc.
e. MAPEI Corporation.

2.8 MISCELLANEOUS MATERIALS

A. Trowelable Underlayments and Patching Compounds: Latex-modified, portland cement-based formulation provided or approved by manufacturer of tile-setting materials for installations indicated.

B. Metal Edge Strips: Angle or L-shaped, height to match tile and setting-bed thickness, metallic or combination of metal and PVC or neoprene base, designed specifically for flooring applications; stainless steel, ASTM A276/A276M or ASTM A666, 300 Series exposed-edge material.

1. Manufacturers: Subject to compliance with requirements, provide products by one of the following:

a. Blanke Corporation.
b. Ceramic Tool Company, Inc.
c. Schluter Systems L.P.

C. Tile Cleaner: A neutral cleaner capable of removing soil and residue without harming tile and grout surfaces, specifically approved for materials and installations indicated by tile and grout manufacturers.

D. Floor Sealer: Manufacturer's standard product for sealing grout joints and that does not change color or appearance of grout.

1. Manufacturers: Subject to compliance with requirements, provide products by one of the following:

a. Custom Building Products.
b. Jamo Inc.
c. Laticrete International, Inc.
d. Sakrete; CRH Americas, Oldcastle APG.
e. Summitville Tiles, Inc.

2.9 MIXING MORTARS AND GROUT

A. Mix mortars and grouts to comply with referenced standards and mortar and grout manufacturers' written instructions.

B. Add materials, water, and additives in accurate proportions.

C. Obtain and use type of mixing equipment, mixer speeds, mixing containers, mixing time, and other procedures to produce mortars and grouts of uniform quality with optimum performance characteristics for installations indicated.

PART 3 - EXECUTION

3.1 EXAMINATION

A. Examine substrates, areas, and conditions where tile will be installed, with Installer present, for compliance with requirements for installation tolerances and other conditions affecting performance of the Work.

1. Verify that substrates for setting tile are firm; dry; clean; free of coatings that are incompatible with tile-setting materials, including curing compounds and other substances that contain soap, wax, oil, or silicone; and comply with flatness tolerances required by ANSI A108.01 for installations indicated.
2. Verify that concrete substrates for tile floors installed with thinset mortar comply with surface finish requirements in ANSI A108.01 for installations indicated.

    a. Verify that surfaces that received a steel trowel finish have been mechanically scarified.
    b. Verify that protrusions, bumps, and ridges have been removed by sanding or grinding.

3. Verify that installation of grounds, anchors, recessed frames, electrical and mechanical units of work, and similar items located in or behind tile has been completed.
4. Verify that joints and cracks in tile substrates are coordinated with tile joint locations; if not coordinated, adjust joint locations in consultation with Architect.

B. Proceed with installation only after unsatisfactory conditions have been corrected.

3.2 PREPARATION

A. Fill cracks, holes, and depressions in concrete substrates for tile floors installed with thinset mortar with trowelable leveling and patching compound specifically recommended by tile-setting material manufacturer.

B. Where indicated, prepare substrates to receive waterproof membrane by applying a reinforced mortar bed that complies with ANSI A108.1A and is sloped 1/4 inch per foot (1:50) toward drains.

C. Blending: For tile exhibiting color variations, verify that tile has been factory blended and packaged so tile units taken from one package show same range of colors as those taken from other packages and match approved Samples. If not factory blended, either return to manufacturer or blend tiles at Project site before installing.

3.3 INSTALLATION OF CERAMIC TILE

A. Comply with TCNA's "Handbook for Ceramic, Glass, and Stone Tile Installation" for TCNA installation methods specified in tile installation schedules. Comply with parts of the ANSI A108 series "Specifications for Installation of Ceramic Tile" that are referenced in TCNA installation methods, specified in tile installation schedules, and apply to types of setting and grouting materials used.

   1. For the following installations, follow procedures in the ANSI A108 series of tile installation standards for providing 95 percent mortar coverage:

      a. Tile floors in wet areas.
      b. Tile floors consisting of tiles 8 by 8 inches (200 by 200 mm) or larger.

B. Extend tile work into recesses and under or behind equipment and fixtures to form complete covering without interruptions unless otherwise indicated. Terminate work neatly at obstructions, edges, and corners without disrupting pattern or joint alignments.

C. Accurately form intersections and returns. Perform cutting and drilling of tile without marring visible surfaces. Carefully grind cut edges of tile abutting trim, finish, or built-in items for straight aligned joints. Fit tile closely to electrical outlets, piping, fixtures, and other penetrations so plates, collars, or covers overlap tile.

D. Provide manufacturer's standard trim shapes where necessary to eliminate exposed tile edges.

E. Where accent tile differs in thickness from field tile, vary setting-bed thickness so that tiles are flush.

F. Jointing Pattern: Lay tile in grid pattern unless otherwise indicated. Lay out tile work and center tile fields in both directions in each space or on each wall area. Lay out tile work to minimize the use of pieces that are less than half of a tile. Provide uniform joint widths unless otherwise indicated.

   1. Where adjoining tiles on floor, base, walls, or trim are specified or indicated to be same size, align joints.
   2. Where tiles are specified or indicated to be whole integer multiples of adjoining tiles on floor, base, walls, or trim, align joints unless otherwise indicated.

G. Joint Widths: Unless otherwise indicated, install tile with the following joint widths:

   1. Glazed Wall Tile: 1/8 inch (3.2 mm).
   2. Ceramic Mosaic Tile: 1/8 inch (3.2 mm).

H. Lay out tile wainscots to dimensions indicated or to next full tile beyond dimensions indicated.

I. Expansion Joints: Provide expansion joints and other sealant-filled joints, including control, contraction, and isolation joints, where indicated. Form joints during installation of setting materials, mortar beds, and tile. Do not saw-cut joints after installing tiles.

1. Where joints occur in concrete substrates, locate joints in tile surfaces directly above them.

J. Metal Edge Strips: Install at locations indicated and where exposed edge of tile flooring meets carpet, wood, or other flooring that finishes flush with or below top of tile and no threshold is indicated.

K. Floor Sealer: Apply floor sealer to grout joints according to floor-sealer manufacturer's written instructions. As soon as floor sealer has penetrated grout joints, remove excess sealer and sealer from tile faces by wiping with soft cloth.

3.4 INSTALLATION OF WATERPROOF MEMBRANES

A. Install waterproof membrane to comply with ANSI A108.13 and manufacturer's written instructions to produce waterproof membrane of uniform thickness that is bonded securely to substrate.

B. Allow waterproof membrane to cure and verify by testing that it is watertight before installing tile or setting materials over it.

3.5 INSTALLATION OF CRACK ISOLATION MEMBRANES

A. Install crack isolation membrane to comply with ANSI A108.17 and manufacturer's written instructions to produce membrane of uniform thickness that is bonded securely to substrate.

B. Allow crack isolation membrane to cure before installing tile or setting materials over it.

3.6 ADJUSTING AND CLEANING

A. Remove and replace tile that is damaged or that does not match adjoining tile. Provide new matching units, installed as specified and in a manner to eliminate evidence of replacement.

B. Cleaning: On completion of placement and grouting, clean all ceramic tile surfaces so they are free of foreign matter.

1. Remove grout residue from tile as soon as possible.
2. Clean grout smears and haze from tile according to tile and grout manufacturer's written instructions but no sooner than 10 days after installation. Use only cleaners recommended by tile and grout manufacturers and only after determining that cleaners are safe to use by testing on samples of tile and other surfaces to be cleaned. Protect metal surfaces and plumbing fixtures from effects of cleaning. Flush surfaces with clean water before and after cleaning.

3.7 PROTECTION

A. Protect installed tile work with kraft paper or other heavy covering during construction period to prevent staining, damage, and wear. If recommended by tile manufacturer, apply coat of neutral protective cleaner to completed tile walls and floors.

B. Prohibit foot and wheel traffic from tiled floors for at least seven days after grouting is completed.

C. Before final inspection, remove protective coverings and rinse neutral protective cleaner from tile surfaces.

3.8 INTERIOR CERAMIC TILE INSTALLATION SCHEDULE

A. Interior Floor Installations, Concrete Subfloor:

1. TCNA F122: Thinset mortar on waterproof membrane.

   a. Ceramic Tile Type: Refer to Drawings.
   b. Thinset Mortar: Modified dry-set mortar.
   c. Grout: Water-cleanable epoxy grout.

2. TCNA F125-Full: Thinset mortar on crack isolation membrane.

   a. Ceramic Tile Type: Refer to Drawings.
   b. Thinset Mortar: Modified dry-set mortar.
   c. Grout: Water-cleanable epoxy grout.

B. Interior Wall Installations, Wood or Metal Studs or Furring:

1. TCNA W244C or TCNA W244F: Thinset mortar on cementitious backer units or fiber-cement backer board.

   a. Ceramic Tile Type: Refer to Drawings.
   b. Thinset Mortar: Modified dry-set mortar.
   c. Grout: Sand-portland cement grout.

2. TCNA W245 or TCNA W248: Thinset mortar on glass-mat, water-resistant gypsum backer board.

   a. Ceramic Tile Type: Refer to Drawings.
   b. Thinset Mortar: Modified dry-set mortar.
   c. Grout: Sand-portland cement grout.

END OF SECTION 09 30 13

SECTION 09 50 00 –WOOD PANEL CEILINGS

PART 1 - GENERAL

1.1 RELATED DOCUMENTS

A. Drawings and general conditions of Contract, including General and Supplementary Conditions and Divisions-1 Specification sections apply to work of this section.

B. Related Sections:
   1. Section 09 22 16 – Non-Structural Metal Framing
   2. Section 09 29 00 – Gypsum Board
   3. Section 09 51 13 – Acoustical Ceilings

1.2 SUMMARY

A. This section describes the requirements for providing the suspended metal ceiling systems as indicated on the drawings and specified, to include:
   1. Veneered Wood Ceiling Panels
   2. Suspension assemblies
   3. Sound absorbing materials
   4. Accessories: provide all other necessary items including devices for attachments to overhead construction, secondary members, splines, splices, connecting clips, wall connectors, wall trims and all other devices required for a complete installation.
   5. Coordinate items penetrating or being integrated into ceiling systems with responsible trades.

1.3 REFERENCES

A. Reference Standards:
   1. American Society for Testing and Materials (ASTM):
      a. A 1008 Standard Specification for Steel, Sheet, Cold Rolled, Carbon, Structural, High-Strength Low-Alloy and High-Strength Low-Alloy with Improved Formability.
      b. A 641 Standard Specification for Zinc-Coated (Galvanized) Carbon Steel Wire.
      c. A 653 Standard Specification for Steel Sheet, Zinc-Coated (Galvanized) by the Hot- Dip Process.
      d. C 423 Sound Absorption and Sound Absorption Coefficients by the Reverberation Room Method
      e. C 635 Specifications for Metal Suspension for Acoustical Tile and Lay-In Panel Ceiling.
      f. C 636 Practice for Installation of Metal Ceiling Suspension Systems for Acoustical Tile and Lay-In Panels.
      g. E 1264 Classification for Acoustical Ceiling Products
   2. Hardwood Plywood & Veneer Association (HPVA)

3. California Air Resources Board (CARB) compliant.
4. Fire-Performance Characteristics: Provide acoustical ceilings that are identical to those tested for the following fire-performance characteristics, per ASTM test method indicated below, by UL or other testing and inspecting organizations acceptable to authorities having jurisdiction. Identify acoustical ceiling components with appropriate markings of applicable testing and inspecting organization.
   a. Surface Burning Characteristics: As follows, tested per ASTM E 84 and complying with ASTM E 1264 for Class A products.
   b. HPVA certification and audit program per ASTM E 84 tunnel test.
5. All woodworking materials shall meet the requirements of the Architectural Woodworking Institute.
6. Coordination of Work: Coordinate ceiling work with installers of related work including, but not limited to building insulation, gypsum board, light fixtures, mechanical systems, electrical systems, and sprinklers.

1.4 SUBMITTAL

A. Comply with the requirements of Division 1, Submittals.

B. Certifications: Manufacturer's certifications that products comply with specified requirements, including laboratory reports showing compliance with specified tests and standards.

C. Product Data: Submit manufacturer's product descriptions and specifications for metal ceiling system.

D. Samples:
   1. Submit minimum 3-1/2 inch or 5-1/2 inch samples of specified panel, minimum of 12" long showing straight edge detail with an attached suspension system and perimeter trim member in the specified finish.

E. Shop Drawings:
   1. Provide properly dimensioned shop drawings showing ceiling layout. Show all locations, markings, quantities, materials, sizes, and shapes and indicate all methods of connecting, anchoring, fastening, bracing, and attaching to work of other trades. Shop drawing submittals to be on computer aided design systems and furnished on computer disks.

F. Delegated-Design Submittal: For seismic restraints for ceiling systems.

   1. Include design calculations for seismic restraints including analysis data signed and sealed by the qualified professional engineer responsible for their preparation.

G. Installation Instructions:
   1. Submit manufacturer's installation instructions as referenced in Part three, Installation.

1.5 MAINTENANCE MATERIAL SUBMITTAL

A. Extra Materials: Deliver extra materials to Owner. Furnish extra materials described below that match products installed. Packaged with protective covering for storage and identified with appropriate labels.
   1. Ceiling Units: Furnish quality of full-size units equal to 2.0 percent of amount installed.
   2. Exposed Suspension System Components: Furnish quantity of each exposed suspension component equal to 2.0 percent of amount installed.

B. Maintenance Data: For finishes to include in maintenance manuals.

1.6 QUALITY ASSURANCE

A. Single-Source Responsibility: Provide ceiling panel units and grid components by a single manufacturer.

B. Woodworking Standards: Manufacturer must comply with specified provisions of Architectural Woodworking Institute quality standards.

C. Coordination of Work: Coordinate ceiling work with installers of related work including, but not limited to building insulation, gypsum board, light fixtures, mechanical systems, electrical systems, and sprinklers.

1.7 DELIVERY, STORAGE, AND HANDLING

A. Store ceiling components in a dry interior location in their cartons prior to installation to avoid damage. Store cartons in a flat, horizontal position. The protectors between the panels should not be removed until installation.

B. Do not store in unconditioned spaces with humidity greater than 55 percent or lower than 25 percent relative humidity and temperatures lower than 50 degrees F or greater than 86 degrees F. Panels must not be exposed to extreme temperatures, for example, close to a heating source or near a window with direct sunlight.

C. Handle ceiling units carefully to avoid chipped edges or damage to units in any way.

1.8 FIELD CONDITIONS

A. Prior to installation, the wood veneer ceiling materials are required to reach room temperature and have stabilized moisture content for a minimum of 72 hours. Store cartons in a flat, horizontal position. The protectors between the panels should not be removed until installation.

B. The wood panels should not be installed in spaces where the temperature or humidity conditions vary from the temperatures and conditions that will be normal in the occupied space.

C. As interior finish products, the veneered panels are designed for installation in temperature conditions between 50 degrees F and 86 degrees F, in spaces where the building is enclosed, and HVAC systems are functioning and will be in continuous operation. Relative humidity "Pressurized Plenums" Subparagraph below is according to CISCA's recommendations for

cleaning duct system and protecting ceiling units in pressurized plenums from damage and soiling caused by blowing dirt and dust that may be present when duct system is first operated.

PART 2 - PRODUCTS

2.1 PERFORMANCE REQUIREMENTS

A. Surface-Burning Characteristics: Comply with ASTM E 84; testing by a qualified testing agency. Identify products with appropriate markings of applicable testing agency.

1. Flame-Spread Index: Comply with ASTM E 1264 for Class A materials.
2. Smoke-Developed Index: 50 or less.

B. Seismic Performance: Suspended ceilings shall withstand the effects of earthquake motions determined according to ASCE/SEI 7.

2.2 MANUFACTURERS

A. Ceiling Panels:
1. Manufacturers: Acoustical Wood Ceiling Panel products manufactured or supplied by the following manufacturer as the basis of design products: Subject to compliance with requirements, provide the following product:
   a. Armstrong World Industries, Inc.
2. Alternate Manufacturers: Use of Wood Ceiling Panel products other than the Basis of Design products may be used upon approval. Approval criteria include, but are not limited to, aesthetic acceptability as determined by the Architect, and whether use of a product other than the basis of design product will result in revisions to other components of the Work. Alternate manufacturers offering products which may be incorporated into the Work include, but are not limited to the following:
   a. USG Interiors, Inc.
   b. CertainTeed Corp.

B. Suspension Systems:
1. Manufacturers: Suspension Systems products manufactured or supplied by the following manufacturers as the basis of design products: Subject to compliance with requirements, provide the following product:
   a. Armstrong World Industries, Inc.
2. Alternate Manufacturers: Use of Suspension Systems products other than the Basis of Design products may be used upon approval. Approval criteria include, but are not limited to, aesthetic acceptability as determined by the Architect, and whether use of a product other than the basis of design product will result in revisions to other components of the Work. Alternate manufacturers offering products which may be incorporated into the Work include, but are not limited to the following:
   a. USG Interiors, Inc.
   b. CertainTeed Corp.

2.3 WOOD CEILING UNITS

A. Ceiling Panels Type WPC-1
   1. Surface Texture: Smooth
   2. Composition: Real wood veneer on fire rated particle board
   3. Species/Finish: Real Wood Veneer
      a. Quartered Mahogany (NQM)
   4. Panel:
      a. Size: 24" x 96"
      b. Reveal: Square 15/16"
      c. Profile: 15/16"
      d. Sabin: N/A
   5. Edge Banding and Trim: To match face veneer
   6. Noise Reduction Coefficient (NRC): N/A
   7. Flame Spread:
      a. Class A: ASTM E84 surface burning characteristics. Flame Spread Index 25 or less. Smoke Developed Index 50 or less.
   8. Dimensional Stability: Standard

B. Ceiling Panels Type WPC-2
   1. Surface Texture: Smooth
   2. Composition: Real wood veneer on fire rated particle board
   3. Finish(s): Real Wood Veneer
      a. Quartered Mahogany (NQM)
   4. Panel
      a. Width: 12-inch
      b. Length Size(s): With 1” reveal panel to panel @ length
         - 96-inch (Nominal): 95-inch (Actual)
      c. Slats:
         1) Width: 3/4-inch
         2) Height: 4-inch
         3) Number of slats (Spacing)
            a) 3 Slats (3-1/4-inch)
   5. Acoustical Performance Infill Options:
      BioAcoustic Infill Panes - Item 5823 or 6657 – NRC 0.75, CAC N/A
   6. Flame Spread:
      a. Class A: ASTM E84 surface burning characteristics. Flame Spread Index 25 or less. Smoke Developed Index 50 or less.
   7. Accessories:
      a. Backer Clip
      b. Flat Backer Kit

2.4 METAL SUSPENSION SYSTEMS, GENERAL

A. Recycled Content: Postconsumer recycled content plus one-half of preconsumer recycled content not less than 25 percent.

B. Metal Suspension-System Standard: Provide manufacturer's standard direct-hung metal suspension systems of types, structural classifications, and finishes indicated that comply with applicable requirements in ASTM C 635/C 635M.

1. High-Humidity Finish: Comply with ASTM C 635/C 635M requirements for "Coating Classification for Severe Environment Performance" where high-humidity finishes are indicated.

C. Attachment Devices: Size for five times the design load indicated in ASTM C 635/C 635M, Table 1, "Direct Hung," unless otherwise indicated. Comply with seismic design requirements.

1. Anchors in Concrete: Anchors of type and material indicated below, with holes or loops for attaching hangers of type indicated and with capability to sustain, without failure, a load equal to five times that imposed by ceiling construction, as determined by testing according to ASTM E 488 or ASTM E 1512 as applicable, conducted by a qualified testing and inspecting agency.

a. Corrosion Protection: Carbon-steel components zinc plated to comply with ASTM B 633, Class Fe/Zn 5 (0.005 mm) for Class SC 1 service condition.

D. Wire Hangers, Braces, and Ties: Provide wires complying with the following requirements:

1. Zinc-Coated, Carbon-Steel Wire: ASTM A 641/A 641M, Class 1 zinc coating, soft temper.
2. Size: Select wire diameter so its stress at three times hanger design load (ASTM C 635/C 635M, Table 1, "Direct Hung") will be less than yield stress of wire, but not less than 12 gauge.

E. Seismic Clips: Manufacturer's standard seismic clips designed to secure acoustical panels in place during a seismic event.

F. Seismic Stabilizer Bars: Manufacturer's standard perimeter stabilizers designed to accommodate seismic forces.

G. Seismic Struts: Manufacturer's standard compression struts designed to accommodate seismic forces.

2.5 METAL SUSPENSION SYSTEM

A. Wide-Face, Capped, Double-Web, Hot-Dip Galvanized, G60 (Z180), Steel Suspension System: Main and cross runners roll formed from cold-rolled steel sheet; hot-dip galvanized according to ASTM A 653/A 653M, G60 (Z180) coating designation; with prefinished, cold-rolled, 15/16-inch- (24-mm-) wide caps on flanges.

1. Structural Classification: Heavy-duty system.
2. Face Design: Flat, flush.
3. Face Finish: Black.

B. Products, Grid: Subject to compliance with requirements, provide the following products:

a. Armstrong World Industries Inc.; Prelude XL 15/16"
b. USG Interiors, Inc.; Subsidiary of USG Corporation; DXL 15/16”
c. CertainTeed Corporation; 15/16” EZ.

C. Accessories/Edge Moldings and Perimeter Trim:
1. WPC-1
a. Concealed Trim
b. As indicated on ceiling details
2. WPC-2
a. 6” Veneered Trim with Adjustable Trim Clip
b. As indicated on ceiling details

D. Supporting grid system shall consist of straight, and curved, factory formed tee in adequate thickness, to support loads. Finish tee color black.

E. Ceiling suspension shall meet structural requirements as required in ASTM 635, ASTM 636, heavy duty direct hung ceilings. Main runners shall be spaced min 2’ on center to support load of panels.

F. Hanger attachments shall be 12-ga. pre-straightened steel wires, rods or other approved hanging device that will support required loads, and lateral forces.

G. Tolerances: Maximum deviation of ceiling panels from edge to edge in width shall not exceed 1/8" in 10’ when measured with a straightedge placed at any directional location on the finished surfaces. Maximum deviation shall not exceed 1/4" from level in any area or room.

PART 3 - EXECUTION

3.1 EXAMINATION

A. Examine substrates, areas, and conditions, including structural framing to which wood panel ceilings attach or abut, with Installer present, for compliance with requirements specified in this and other Sections that affect ceiling installation and anchorage and with requirements for installation tolerances and other conditions affecting performance of wood panel ceilings.

B. Examine wood panels before installation. Reject wood panels that are wet, moisture damaged, or mold damaged.

C. Do not proceed with installation until all wet work such as concrete, terrazzo, plastering and painting has been completed and thoroughly dried out.

D. Proper designs for both supply air and return air, maintenance of the HVAC filters and building interior space are essential to minimize soiling. Before starting the HVAC system, make sure the air supply is properly filtered, and the building interior is free of construction dust.

3.2 PREPARATION

A. Measure each ceiling area and establish a layout of acoustical units to balance border widths at opposite edges of each ceiling. Avoid use of less than half width units at borders and comply with reflected ceiling plans. Coordinate panel layout with mechanical and electrical fixtures.

B. ceiling materials should be permitted to reach room temperature and have a stabilized moisture content for a minimum of 72 hours before installation. (Remove plastic wrap to allow panels to climatize).

3.3 INSTALLATION

A. General: Install wood panel ceilings to comply with ASTM C 636/C 636M and seismic design requirements indicated, according to manufacturer's written instructions and CISCA's "Ceiling Systems Handbook."

B. Suspend ceiling hangers from building's structural members and as follows:

1. Install hangers plumb and free from contact with insulation or other objects within ceiling plenum that are not part of supporting structure or of ceiling suspension system.
2. Splay hangers only where required to miss obstructions; offset resulting horizontal forces by bracing, counters playing, or other equally effective means.
3. Where width of ducts and other construction within ceiling plenum produces hanger spacings that interfere with location of hangers at spacings required to support standard suspension-system members, furnish and install, as work of this section, supplemental suspension members and hangers in form of trapezes or equivalent devices.
4. Secure wire hangers to ceiling-suspension members and to supports above with a minimum of three tight turns. Connect hangers directly either to structures or to inserts, eye screws, or other devices that are secure and appropriate for substrate and that will not deteriorate or otherwise fail due to age, corrosion, or elevated temperatures.
5. When steel framing does not permit installation of hanger wires at spacing required, install carrying channels or other supplemental support for attachment of hanger wires.
6. Do not attach hangers to steel deck tabs.
7. Do not attach hangers to steel roof deck. Attach hangers to structural members or to supplemental framing provided as work of this section.
8. Space hangers not more than 48 inches (1200 mm) o.c. along each member supported directly from hangers unless otherwise indicated; provide hangers not more than 8 inches (200 mm) from ends of each member.
9. Size supplemental suspension members and hangers to support ceiling loads within performance limits established by referenced standards and publications.

C. Secure bracing wires to ceiling suspension members and to supports with a minimum of four tight turns. Suspend bracing from building's structural members as required for hangers, without attaching to permanent metal forms, steel deck, or steel deck tabs. Fasten bracing wires into concrete with cast-in-place or post installed anchors.

D. Install edge moldings and trim of type indicated at perimeter of acoustical ceiling area and where necessary to conceal edges of wood panels.

1. Screw attach moldings to substrate at intervals not more than 16 inches (400 mm) o.c. and not more than 3 inches (75 mm) from ends, leveling with ceiling suspension system

to a tolerance of 1/8 inch in 12 feet (3.2 mm in 3.6 m). Miter corners accurately and connect securely.

2. Do not use exposed fasteners, including pop rivets, on molding and trim.

E. Install suspension-system runners so they are square and securely interlocked with one another. Remove and replace dented, bent, or kinked members.

F. Install wood panels with undamaged edges and fit accurately into suspension-system runners and edge moldings. Scribe and cut panels at borders and penetrations to provide a neat, precise fit.

1. Arrange directionally patterned wood panels as follows:

a. As indicated on reflected ceiling plans.

2. For reveal-edged panels on suspension-system runners, install panels with bottom of reveal in firm contact with top surface of runner flanges.
3. Paint cut edges of panel remaining exposed after installation; match color of exposed panel surfaces using coating recommended in writing for this purpose by wood panel manufacturer.
4. Install seismic clips in areas indicated; space according to panel manufacturer's written instructions unless otherwise indicated.

3.4 ADJUSTING AND CLEANING

A. Clean exposed surfaces of wood panel ceilings, including trim, edge moldings, and suspension-system members. Comply with manufacturer's written instructions for cleaning and touchup of minor finish damage.

B. Remove and replace ceiling components that cannot be successfully cleaned and repaired to permanently eliminate evidence of damage.

END OF SECTION 09 51 26

SECTION 095113 - ACOUSTICAL PANEL CEILINGS

PART 1 - GENERAL

1.1 RELATED DOCUMENTS

A. Drawings and general provisions of the Contract, including General and Supplementary Conditions and Division 01 Specification Sections, apply to this Section.

1.2 SUMMARY

A. Section includes acoustical panels and exposed suspension systems for ceilings.

1.3 ACTION SUBMITTALS

A. Product Data: For each type of product.

B. Samples: For each exposed product and for each color and texture specified, 6 inches (150 mm) in size.

C. Certification: Provide Certification signed by Manufacturer of acoustical ceiling panels that the panels are suitable for use with a plenum return ceiling, and that panels will not allow return air to pass through them.

D. Delegated-Design Submittal: For seismic restraints for ceiling systems.

1. Include design calculations for seismic restraints including analysis data signed and sealed by the qualified professional engineer responsible for their preparation.

1.4 CLOSEOUT SUBMITTALS

A. Maintenance Data: For finishes to include in maintenance manuals.

1.5 MAINTENANCE MATERIAL SUBMITTALS

A. Furnish extra materials that match products installed and that are packaged with protective covering for storage and identified with labels describing contents.

1. Acoustical Ceiling Panels: Full-size panels equal to 2 percent of quantity installed.
2. Suspension-System Components: Quantity of each exposed component equal to 2 percent of quantity installed.

1.6 DELIVERY, STORAGE, AND HANDLING

A. Deliver acoustical panels, suspension-system components, and accessories to Project site in original, unopened packages and store them in a fully enclosed, conditioned space where they will be protected against damage from moisture, humidity, temperature extremes, direct sunlight, surface contamination, and other causes.

B. Before installing acoustical panels, permit them to reach room temperature and a stabilized moisture content.

C. Handle acoustical panels carefully to avoid chipping edges or damaging units in any way.

1.7 FIELD CONDITIONS

A. Environmental Limitations: Do not install acoustical panel ceilings until spaces are enclosed and weatherproof, wet work in spaces is complete and dry, work above ceilings is complete, and ambient temperature and humidity conditions are maintained at the levels indicated for Project when occupied for its intended use.

PART 2 - PRODUCTS

2.1 PERFORMANCE REQUIREMENTS

A. Surface-Burning Characteristics: Comply with ASTM E 84; testing by a qualified testing agency. Identify products with appropriate markings of applicable testing agency.

1. Flame-Spread Index: Comply with ASTM E 1264 for Class A materials.
2. Smoke-Developed Index: 50 or less.

B. Seismic Performance: Suspended ceilings shall withstand the effects of earthquake motions determined according to ASCE/SEI 7.

2.2 ACOUSTICAL PANELS, GENERAL

A. Source Limitations:

1. Acoustical Ceiling Panel: Obtain each type from single source from single manufacturer.
2. Suspension System: Obtain each type from single source from single manufacturer.

B. Source Limitations: Obtain each type of acoustical ceiling panel and supporting suspension system from single source from single manufacturer.

C. Recycled Content: Postconsumer recycled content plus one-half of preconsumer recycled content not less than 40 percent.

D. Acoustical Panel Standard: Provide manufacturer's standard panels of configuration indicated that comply with ASTM E 1264 classifications as designated by types, patterns, acoustical ratings, and light reflectance unless otherwise indicated.

1. Mounting Method for Measuring NRC: Type E-400; plenum mounting in which face of test specimen is 15-3/4 inches (400 mm) away from test surface according to ASTM E 795.

E. Acoustical Panel Colors and Patterns: Match appearance characteristics indicated for each product type.

1. Where appearance characteristics of acoustical panels are indicated by referencing pattern designations in ASTM E 1264 and not manufacturers' proprietary product designations, provide products selected by Architect from each manufacturer's full range that comply with requirements indicated for type, pattern, color, light reflectance, acoustical performance, edge detail, and size.

2.3 ACOUSTICAL PANELS **ACT-1**

A. Manufacturers: Subject to compliance with requirements, provide one of the following:

1. Armstrong World Industries, Inc.; No. 1915 “ULTIMA”
2. CertainTeed Corp.; Symphony m; #1220BF-75-IOF-1.
3. USG Interiors, Inc.; Subsidiary of USG Corporation; No. 88985, “Mars Planks.”

B. Classification: Provide panels complying with ASTM E 1264 for type, form, and pattern as follows:

1. Type and Form: Type IV, Form 1 & 2.
2. Pattern: E & G (lightly textured).

C. Color: White.

D. LR: Not less than 0.80.

E. NRC: Not less than 0.75.

F. CAC: Not less than 35.

G. Edge/Joint Detail: Beveled tegular.

H. Thickness: 3/4 inch (18 mm).

I. Modular Size: 24 by 48 inches (610 by 1220 mm).

J. Broad Spectrum Antimicrobial Fungicide and Bactericide Treatment: Provide acoustical panels treated with manufacturer's standard antimicrobial formulation that inhibits fungus, mold, mildew, and gram-positive and gram-negative bacteria and showing no mold, mildew, or bacterial growth when tested according to ASTM D 3273 and evaluated according to ASTM D 3274 or ASTM G 21.

2.4 METAL SUSPENSION SYSTEMS, GENERAL

A. Recycled Content: Postconsumer recycled content plus one-half of preconsumer recycled content not less than 25 percent.

B. Metal Suspension-System Standard: Provide manufacturer's standard direct-hung metal suspension systems of types, structural classifications, and finishes indicated that comply with applicable requirements in ASTM C 635/C 635M.

1. High-Humidity Finish: Comply with ASTM C 635/C 635M requirements for "Coating Classification for Severe Environment Performance" where high-humidity finishes are indicated.

C. Attachment Devices: Size for five times the design load indicated in ASTM C 635/C 635M, Table 1, "Direct Hung," unless otherwise indicated. Comply with seismic design requirements.

1. Anchors in Concrete: Anchors of type and material indicated below, with holes or loops for attaching hangers of type indicated and with capability to sustain, without failure, a load equal to five times that imposed by ceiling construction, as determined by testing according to ASTM E 488 or ASTM E 1512 as applicable, conducted by a qualified testing and inspecting agency.

a. Corrosion Protection: Carbon-steel components zinc plated to comply with ASTM B 633, Class Fe/Zn 5 (0.005 mm) for Class SC 1 service condition.

D. Wire Hangers, Braces, and Ties: Provide wires complying with the following requirements:

1. Zinc-Coated, Carbon-Steel Wire: ASTM A 641/A 641M, Class 1 zinc coating, soft temper.
2. Size: Select wire diameter so its stress at three times hanger design load (ASTM C 635/C 635M, Table 1, "Direct Hung") will be less than yield stress of wire, but provide not less than 0.135-inch- (3.5-mm-) diameter wire.

E. Seismic Clips: Manufacturer's standard seismic clips designed to secure acoustical panels in place during a seismic event.

F. Seismic Stabilizer Bars: Manufacturer's standard perimeter stabilizers designed to accommodate seismic forces.

G. Seismic Struts: Manufacturer's standard compression struts designed to accommodate seismic forces.

2.5 METAL SUSPENSION SYSTEM

A. Wide-Face, Capped, Double-Web, Hot-Dip Galvanized, G60 (Z180), Steel Suspension System: Main and cross runners roll formed from cold-rolled steel sheet; hot-dip galvanized according to ASTM A 653/A 653M, G60 (Z180) coating designation; with prefinished, cold-rolled, 15/16-inch- (24-mm-) wide caps on flanges.

1. Structural Classification: Intermediate-duty system.
2. Face Design: Flat, flush.

3. Face Finish: Painted white.

B. Products, Grid: Subject to compliance with requirements, provide the following products:

1. Armstrong World Industries Inc.; Suprafine XL 9/16".
2. USG Interiors, Inc.; Subsidiary of USG Corporation; "Centricitee DXT."
3. Certainteed Corporation; 9/16" EZ.

2.6 METAL EDGE MOLDINGS AND TRIM

A. Roll-Formed, Sheet-Metal Edge Moldings and Trim: Type and profile indicated or, if not indicated, manufacturer's standard moldings for edges and penetrations that comply with seismic design requirements; formed from sheet metal of same material, finish, and color as that used for exposed flanges of suspension system runners.

1. Provide manufacturer's standard edge moldings that fit acoustical panel edge details and suspension systems indicated and that match width and configuration of exposed runners, unless otherwise indicated.
2. For lay-in panels with reveal edge details, provide stepped edge molding that forms reveal of same depth and width as that formed between edge of panel and flange at exposed suspension member.
3. For circular penetrations of ceiling, provide edge moldings fabricated to diameter required to fit penetration exactly.

PART 3 - EXECUTION

3.1 EXAMINATION

A. Examine substrates, areas, and conditions, including structural framing to which acoustical panel ceilings attach or abut, with Installer present, for compliance with requirements specified in this and other Sections that affect ceiling installation and anchorage and with requirements for installation tolerances and other conditions affecting performance of acoustical panel ceilings.

B. Examine acoustical panels before installation. Reject acoustical panels that are wet, moisture damaged, or mold damaged.

C. Proceed with installation only after unsatisfactory conditions have been corrected.

3.2 PREPARATION

A. Measure each ceiling area and establish layout of acoustical panels to balance border widths at opposite edges of each ceiling. Avoid using less-than-half-width panels at borders, and comply with layout shown on reflected ceiling plans.

3.3 INSTALLATION

A. General: Install acoustical panel ceilings to comply with ASTM C 636/C 636M and seismic design requirements indicated, according to manufacturer's written instructions and CISCA's "Ceiling Systems Handbook."

B. Suspend ceiling hangers from building's structural members and as follows:

1. Install hangers plumb and free from contact with insulation or other objects within ceiling plenum that are not part of supporting structure or of ceiling suspension system.
2. Splay hangers only where required to miss obstructions; offset resulting horizontal forces by bracing, countersplaying, or other equally effective means.
3. Where width of ducts and other construction within ceiling plenum produces hanger spacings that interfere with location of hangers at spacings required to support standard suspension-system members, furnish and install, as work of this section, supplemental suspension members and hangers in form of trapezes or equivalent devices.
4. Secure wire hangers to ceiling-suspension members and to supports above with a minimum of three tight turns. Connect hangers directly either to structures or to inserts, eye screws, or other devices that are secure and appropriate for substrate and that will not deteriorate or otherwise fail due to age, corrosion, or elevated temperatures.
5. When steel framing does not permit installation of hanger wires at spacing required, install carrying channels or other supplemental support for attachment of hanger wires.
6. Do not attach hangers to steel deck tabs.
7. Do not attach hangers to steel roof deck. Attach hangers to structural members or to supplemental framing provided as work of this section.
8. Space hangers not more than 48 inches (1200 mm) o.c. along each member supported directly from hangers unless otherwise indicated; provide hangers not more than 8 inches (200 mm) from ends of each member.
9. Size supplemental suspension members and hangers to support ceiling loads within performance limits established by referenced standards and publications.

C. Secure bracing wires to ceiling suspension members and to supports with a minimum of four tight turns. Suspend bracing from building's structural members as required for hangers, without attaching to permanent metal forms, steel deck, or steel deck tabs. Fasten bracing wires into concrete with cast-in-place or postinstalled anchors.

D. Install edge moldings and trim of type indicated at perimeter of acoustical ceiling area and where necessary to conceal edges of acoustical panels.

1. Screw attach moldings to substrate at intervals not more than 16 inches (400 mm) o.c. and not more than 3 inches (75 mm) from ends, leveling with ceiling suspension system to a tolerance of 1/8 inch in 12 feet (3.2 mm in 3.6 m). Miter corners accurately and connect securely.
2. Do not use exposed fasteners, including pop rivets, on moldings and trim.

E. Install suspension-system runners so they are square and securely interlocked with one another. Remove and replace dented, bent, or kinked members.

F. Install acoustical panels with undamaged edges and fit accurately into suspension-system runners and edge moldings. Scribe and cut panels at borders and penetrations to provide a neat, precise fit.

1. Arrange directionally patterned acoustical panels as follows:

a. As indicated on reflected ceiling plans.

2. For reveal-edged panels on suspension-system runners, install panels with bottom of reveal in firm contact with top surface of runner flanges.
3. Paint cut edges of panel remaining exposed after installation; match color of exposed panel surfaces using coating recommended in writing for this purpose by acoustical panel manufacturer.
4. Install seismic clips in areas indicated; space according to panel manufacturer's written instructions unless otherwise indicated.

3.4 CLEANING

A. Clean exposed surfaces of acoustical panel ceilings, including trim, edge moldings, and suspension-system members. Comply with manufacturer's written instructions for cleaning and touchup of minor finish damage. Remove and replace ceiling components that cannot be successfully cleaned and repaired to permanently eliminate evidence of damage.

END OF SECTION 095113

SECTION 096513 - RESILIENT BASE AND ACCESSORIES

PART 1 - GENERAL

1.1 RELATED DOCUMENTS

A. Drawings and general provisions of the Contract, including General and Supplementary Conditions and Division 01 Specification Sections, apply to this Section.

1.2 SUMMARY

A. Section Includes:
   1. Thermoplastic-rubber base.
   2. Rubber molding accessories.

1.3 ACTION SUBMITTALS

A. Product Data: For each type of product.

B. Samples: For each exposed product and for each color and texture specified, not less than 12 inches (300 mm) long.

C. Product Schedule: For resilient base and accessory products.

1.4 MAINTENANCE MATERIAL SUBMITTALS

A. Furnish extra materials that match products installed and that are packaged with protective covering for storage and identified with labels describing contents.

   1. Furnish not less than 10 linear feet (3 linear m) for every 500 linear feet (150 linear m) or fraction thereof, of each type, color, pattern, and size of resilient product installed.

1.5 DELIVERY, STORAGE, AND HANDLING

A. Store resilient products and installation materials in dry spaces protected from the weather, with ambient temperatures maintained within range recommended by manufacturer, but not less than 50 deg F (10 deg C) or more than 90 deg F (32 deg C).

1.6 FIELD CONDITIONS

A. Maintain ambient temperatures within range recommended by manufacturer, but not less than 70 deg F (21 deg C) or more than 95 deg F (35 deg C), in spaces to receive resilient products during the following periods:

1. 48 hours before installation.
2. During installation.
3. 48 hours after installation.

B. After installation and until Substantial Completion, maintain ambient temperatures within range recommended by manufacturer, but not less than 55 deg F (13 deg C) or more than 95 deg F (35 deg C).

C. Install resilient products after other finishing operations, including painting, have been completed.

PART 2 - PRODUCTS

2.1 THERMOPLASTIC-RUBBER BASE **RB-1**

A. Manufacturers: Subject to compliance with requirements, provide products by one of the following:

1. Roppe Corporation, USA
2. Armstrong World Industries, Inc.
3. Burke Mercer Flooring Products; a division of Burke Industries Inc.
4. Johnsonite; a Tarkett company.

B. Product Standard: ASTM F 1861, Type TP (rubber, thermoplastic).

1. Group: I (solid, homogeneous).
2. Style and Location:

   a. Style A, Straight: Provide in areas with carpet.
   b. Style B, Cove: Provide in areas with resilient floor coverings.

C. Thickness: 0.125 inch (3.2 mm).

D. Height: 4 inches (102 mm).

E. Lengths: Coils in manufacturer's standard length.

F. Outside Corners: Preformed.

G. Inside Corners: Job formed or preformed.

H. Colors: As indicated on Finish Schedule.

2.2 RUBBER MOLDING ACCESSORY

A. Description: Rubber reducer strip for resilient floor covering, joiner for tile and carpet, transition strips.

B. Profile and Dimensions: As required.

C. Locations: At locations requiring transition or termination from tile to carpet; carpet to polished concrete, and tile to polished concrete.

D. Colors and Patterns: Match Architect's sample.

2.3 INSTALLATION MATERIALS

A. Trowelable Leveling and Patching Compounds: Latex-modified, portland-cement-based or blended hydraulic-cement-based formulation provided or approved by resilient-product manufacturer for applications indicated.

B. Adhesives: Water-resistant type recommended by resilient-product manufacturer for resilient products and substrate conditions indicated.

1. Adhesives shall have a VOC content of 50 g/L or less.

PART 3 - EXECUTION

3.1 EXAMINATION

A. Examine substrates, with Installer present, for compliance with requirements for maximum moisture content and other conditions affecting performance of the Work.

1. Verify that finishes of substrates comply with tolerances and other requirements specified in other Sections and that substrates are free of cracks, ridges, depressions, scale, and foreign deposits that might interfere with adhesion of resilient products.

B. Proceed with installation only after unsatisfactory conditions have been corrected.

1. Installation of resilient products indicates acceptance of surfaces and conditions.

3.2 PREPARATION

A. Prepare substrates according to manufacturer's written instructions to ensure adhesion of resilient products.

B. Concrete Substrates for Resilient Stair Accessories: Prepare horizontal surfaces according to ASTM F 710.

1. Verify that substrates are dry and free of curing compounds, sealers, and hardeners.
2. Remove substrate coatings and other substances that are incompatible with adhesives and that contain soap, wax, oil, or silicone, using mechanical methods recommended by manufacturer. Do not use solvents.

3. Alkalinity and Adhesion Testing: Perform tests recommended by manufacturer. Proceed with installation only after substrate alkalinity falls within range on pH scale recommended by manufacturer in writing, but not less than 5 or more than 9 pH.
4. Moisture Testing: Perform tests so that each test area does not exceed 1000 sq. ft. (304.8 sq. m), and perform no fewer than three tests in each installation area and with test areas evenly spaced in installation areas.

    a. Anhydrous Calcium Chloride Test: ASTM F 1869. Proceed with installation only after substrates have maximum moisture-vapor-emission rate of 3 lb of water/1000 sq. ft. (1.36 kg of water/92.9 sq. m) in 24 hours.
    b. Relative Humidity Test: Using in-situ probes, ASTM F 2170. Proceed with installation only after substrates have a maximum percent relative humidity level allowed by the manufacturer.

C. Fill cracks, holes, and depressions in substrates with trowelable leveling and patching compound; remove bumps and ridges to produce a uniform and smooth substrate.

D. Do not install resilient products until materials are the same temperature as space where they are to be installed.

1. At least 48 hours in advance of installation, move resilient products and installation materials into spaces where they will be installed.

E. Immediately before installation, sweep and vacuum clean substrates to be covered by resilient products.

3.3 RESILIENT BASE INSTALLATION

A. Comply with manufacturer's written instructions for installing resilient base.

B. Apply resilient base to walls, columns, pilasters; casework and cabinets in toe and knee spaces, end panels, exposed surfaces; and other permanent fixtures in rooms and areas where base is required.

C. Install resilient base in lengths as long as practical without gaps at seams and with tops of adjacent pieces aligned.

D. Tightly adhere resilient base to substrate throughout length of each piece, with base in continuous contact with horizontal and vertical substrates.

E. Do not stretch resilient base during installation.

F. On masonry surfaces or other similar irregular substrates, fill voids along top edge of resilient base with manufacturer's recommended adhesive filler material.

G. Preformed Corners: Install preformed corners before installing straight pieces.

H. Job-Formed Corners:

1. Outside Corners: Use straight pieces of maximum lengths possible and form with returns not less than 3 inches (76 mm) in length.

    a. Form without producing discoloration (whitening) at bends.

2. Inside Corners: Use straight pieces of maximum lengths possible and form with returns not less than 3 inches (76 mm) in length.

    a. Cope corners to minimize open joints.

3.4 RESILIENT ACCESSORY INSTALLATION

A. Comply with manufacturer's written instructions for installing resilient accessories.

B. Resilient Molding Accessories: Butt to adjacent materials and tightly adhere to substrates throughout length of each piece. Install reducer strips at edges of floor covering that would otherwise be exposed.

3.5 CLEANING AND PROTECTION

A. Comply with manufacturer's written instructions for cleaning and protecting resilient products.

B. Perform the following operations immediately after completing resilient-product installation:

1. Remove adhesive and other blemishes from surfaces.
2. Sweep and vacuum horizontal surfaces thoroughly.
3. Damp-mop horizontal surfaces to remove marks and soil.

C. Protect resilient products from mars, marks, indentations, and other damage from construction operations and placement of equipment and fixtures during remainder of construction period.

D. Cover resilient products subject to wear and foot traffic until Substantial Completion.

END OF SECTION 096513

SECTION 096516 - RESILIENT SHEET FLOORING

PART 1 - GENERAL

1.1 RELATED DOCUMENTS

A. Drawings and general provisions of the Contract, including General and Supplementary Conditions and Division 01 Specification Sections, apply to this Section.

1.2 SUMMARY

A. Section Includes:

1. Vinyl sheet floor covering, without backing.

B. Related Sections:

1. Division 09 Section "Resilient Base and Accessories" for resilient base, reducer strips, and other accessories installed with resilient floor coverings.

1.3 SUBMITTALS

A. Product Data: For each type of product indicated.

B. Shop Drawings: For each type of floor covering. Include floor covering layouts, locations of seams, edges, columns, doorways, enclosing partitions, built-in furniture, cabinets, and cutouts.

1. Show details of special patterns.

C. Samples for Initial Selection: For each type of floor covering indicated.

D. Samples for Verification: In manufacturer's standard size, but not less than 6-by-9-inch sections of each different color and pattern of floor covering required.

1. For heat-welding bead, manufacturer's standard-size Samples, but not less than 9 inches long, of each color required.

E. Seam Samples: For seamless-installation technique indicated and for each floor covering product, color, and pattern required; with seam running lengthwise and in center of 6-by-9-inch Sample applied to a rigid backing and prepared by Installer for this Project.

F. Product Schedule: For floor coverings. Use same designations indicated on Drawings.

G. Qualification Data: For qualified Installer.

H. Maintenance Data: For each type of floor covering to include in maintenance manuals.

1.4 QUALITY ASSURANCE

A. Installer Qualifications: A qualified installer who employs workers for this Project who are competent in techniques required by manufacturer for floor covering installation and seaming method indicated.

1. Engage an installer who employs workers for this Project who are trained or certified by floor covering manufacturer for installation techniques required.

B. Fire-Test-Response Characteristics: As determined by testing identical products according to ASTM E 648 or NFPA 253 by a qualified testing agency.

1. Critical Radiant Flux Classification: Class I, not less than 0.45 W/sq. cm.

C. Mockups: Build mockups to verify selections made under sample submittals and to demonstrate aesthetic effects and set quality standards for materials and execution.

1. Build mockups for floor coverings including resilient base and accessories.

a. Size: Minimum 100 sq. ft. for each type, color and pattern in locations directed by Architect.

1.5 DELIVERY, STORAGE, AND HANDLING

A. Store floor coverings and installation materials in dry spaces protected from the weather, with ambient temperatures maintained within range recommended by manufacturer, but not less than 50 deg F (10 deg C) or more than 90 deg F (32 deg C). Store rolls upright.

1.6 PROJECT CONDITIONS

A. Maintain ambient temperatures within range recommended by manufacturer, but not less than 70 deg F or more than 85 deg F , in spaces to receive floor coverings during the following time periods:

1. 48 hours before installation.
2. During installation.
3. 48 hours after installation.

B. Until Substantial Completion, maintain ambient temperatures within range recommended by manufacturer, but not less than 55 deg F or more than 95 deg F .

C. Close spaces to traffic during floor covering installation.

D. Close spaces to traffic for 48 hours after floor covering installation.

E. Install floor coverings after other finishing operations, including painting, have been completed.

1.7 EXTRA MATERIALS

A. Furnish extra materials that match products installed and that are packaged with protective covering for storage and identified with labels describing contents.

1. Floor Covering: Furnish quantity not less than 10 linear feet for every 500 linear feet or fraction thereof, in roll form and in full roll width for each color, pattern, and type of floor covering installed.

PART 2 - PRODUCTS

2.1 VINYL SHEET FLOOR COVERING SV-1

A. Products: Subject to compliance with requirements, available products that may be incorporated into the Work include, but are not limited to, the following:

1. Altro Group;
2. Armstrong World Industries, Inc.;
3. Congoleum Corporation;
4. DzynSpec, Division of Matsinc.;
5. Forbo Flooring, Inc.;
6. Gerflor, Architectural Floor Systems, Inc.;
7. Lonseal, Inc.; Mannington Mills, Inc.;
8. Polyflor, Ltd., Distributed by Gerbert Limited;
9. Tarkett, Inc.;
10. TOLI International;

B. Unbacked Vinyl Sheet Floor Covering: ASTM F 1913, 0.080 inch thick.

C. Vinyl Sheet Floor Covering with Backing: ASTM F 1303.

1. Type (Binder Content): Type II, minimum binder content of 34 percent.
2. Wear-Layer Thickness: Grade 1.
3. Overall Thickness: As standard with manufacturer.
4. Interlayer Material: Foamed plastic.
5. Backing Class: Class C (foamed plastic).

D. Wearing Surface: Embossed.

E. Sheet Width: As standard with manufacturer.

F. Seaming Method: Heat welded.

G. Colors and Patterns: As selected by Architect from full range of industry colors.

2.2 INSTALLATION MATERIALS

A. Trowelable Leveling and Patching Compounds: Latex-modified, portland cement based or blended hydraulic-cement-based formulation provided or approved by manufacturer for applications indicated.

B. Adhesives: Water-resistant type recommended by manufacturer to suit floor covering and substrate conditions indicated.

1. Use adhesives that have a VOC content of not more than 60 g/L when calculated according to 40 CFR 59, Subpart D (EPA Method 24).

C. Seamless-Installation Accessories:

1. Heat-Welding Bead: Manufacturer's solid-strand product for heat welding seams.

a. Color: As selected by Architect from manufacturer's full range to contrast with floor covering, Match floor covering.

2. Chemical-Bonding Compound: Manufacturer's product for chemically bonding seams.

a. VOC Content: Not more than 510 g/L. when calculated according to 40 CFR 59, Subpart D (EPA method 24).

D. Floor Polish: Provide protective liquid floor polish products as recommended by manufacturer.

PART 3 - EXECUTION

3.1 EXAMINATION

A. Examine substrates, with Installer present, for compliance with requirements for maximum moisture content and other conditions affecting performance of the Work.

B. Verify that finishes of substrates comply with tolerances and other requirements specified in other Sections and that substrates are free of cracks, ridges, depressions, scale, and foreign deposits that might interfere with adhesion of floor coverings.

C. Proceed with installation only after unsatisfactory conditions have been corrected.

3.2 PREPARATION

A. Prepare substrates according to manufacturer's written instructions to ensure adhesion of floor coverings.

B. Concrete Substrates: Prepare according to ASTM F 710.

1. Verify that substrates are dry and free of curing compounds, sealers, and hardeners.

2. Remove substrate coatings and other substances that are incompatible with adhesives and that contain soap, wax, oil, or silicone, using mechanical methods recommended by manufacturer. Do not use solvents.
3. Alkalinity and Adhesion Testing: Perform tests recommended by manufacturer. Proceed with installation only after substrates pass testing.
4. Moisture Testing: Perform tests recommended by manufacturer and as follows. Proceed with installation only after substrates pass testing.

    a. Perform anhydrous calcium chloride test, ASTM F 1869. Proceed with installation only after substrates have maximum moisture-vapor-emission rate of 3 lb of water/1000 sq. ft. in 24 hours.
    b. Perform relative humidity test using in situ probes, ASTM F 2170. Proceed with installation only after substrates have a maximum 75 percent relative humidity level measurement.

C. Fill cracks, holes, and depressions in substrates with trowelable leveling and patching compound and remove bumps and ridges to produce a uniform and smooth substrate.

D. Do not install floor coverings until they are same temperature as space where they are to be installed.

1. Move floor coverings and installation materials into spaces where they will be installed at least 48 hours in advance of installation.

E. Sweep and vacuum clean substrates to be covered by floor coverings immediately before installation.

3.3 FLOOR COVERING INSTALLATION

A. Comply with manufacturer's written instructions for installing floor coverings.

B. Unroll floor coverings and allow them to stabilize before cutting and fitting.

C. Lay out floor coverings as follows:

1. Maintain uniformity of floor covering direction.
2. Minimize number of seams; place seams in inconspicuous and low-traffic areas, at least 6 inches away from parallel joints in floor covering substrates.
3. Match edges of floor coverings for color shading at seams.
4. Avoid cross seams.

D. Scribe and cut floor coverings to butt neatly and tightly to vertical surfaces, permanent fixtures, and built-in furniture including cabinets, pipes, outlets, and door frames.

E. Extend floor coverings into toe spaces, door reveals, closets, and similar openings.

F. Maintain reference markers, holes, or openings that are in place or marked for future cutting by repeating on floor coverings as marked on substrates. Use chalk or other nonpermanent marking device.

G. Install floor coverings on covers for telephone and electrical ducts and similar items in installation areas. Maintain overall continuity of color and pattern between pieces of floor coverings installed on covers and adjoining floor covering. Tightly adhere floor covering edges to substrates that abut covers and to cover perimeters.

H. Adhere floor coverings to substrates using a full spread of adhesive applied to substrate to produce a completed installation without open cracks, voids, raising and puckering at joints, telegraphing of adhesive spreader marks, and other surface imperfections.

I. Seamless Installation:

1. Heat-Welded Seams: Comply with ASTM F 1516. Rout joints and use welding bead to permanently fuse sections into a seamless floor covering. Prepare, weld, and finish seams to produce surfaces flush with adjoining floor covering surfaces.
2. Chemically-Bonded Seams: Bond seams with chemical-bonding compound to permanently fuse sections into a seamless floor covering. Prepare seams and apply compound to produce tightly-fitted seams without gaps, overlays, or excess bonding compound on floor covering surfaces.

3.4 CLEANING AND PROTECTION

A. Comply with manufacturer's written instructions for cleaning and protection of floor coverings.

B. Perform the following operations immediately after completing floor covering installation:

1. Remove adhesive and other blemishes from floor covering surfaces.
2. Sweep and vacuum floor coverings thoroughly.
3. Damp-mop floor coverings to remove marks and soil.

C. Protect floor coverings from mars, marks, indentations, and other damage from construction operations and placement of equipment and fixtures during remainder of construction period.

D. Floor Polish: Remove soil, visible adhesive, and surface blemishes from floor covering before applying liquid floor polish.

1. Apply two coat(s).

E. Cover floor coverings until Substantial Completion.

END OF SECTION 096516

SECTION 096519 - RESILIENT TILE FLOORING

PART 1 - GENERAL

1.1 RELATED DOCUMENTS

A. Drawings and general provisions of the Contract, including General and Supplementary Conditions and Division 01 Specification Sections, apply to this Section.

1.2 SUMMARY

A. Section Includes:
   1. Luxury vinyl floor tile.

1.3 ACTION SUBMITTALS

A. Product Data: For each type of product.

B. Shop Drawings: For each type of floor tile. Include floor tile layouts, edges, columns, doorways, enclosing partitions, built-in furniture, cabinets, and cutouts.

   1. Show details of special patterns.

C. Samples: Full-size units of each color and pattern of floor tile required.

D. Samples for Initial Selection: For each type of floor tile indicated.

E. Product Schedule: For floor tile. Use same designations indicated on Drawings.

1.4 CLOSEOUT SUBMITTALS

A. Maintenance Data: For each type of floor tile to include in maintenance manuals.

1.5 MAINTENANCE MATERIAL SUBMITTALS

A. Furnish extra materials that match products installed and that are packaged with protective covering for storage and identified with labels describing contents.

   1. Floor Tile: Furnish one box for every 50 boxes or fraction thereof, of each type, color, and pattern of floor tile installed.

1.6 QUALITY ASSURANCE

A. Installer Qualifications: A qualified installer who employs workers for this Project who are competent in techniques required by manufacturer for floor tile installation and seaming method indicated.

1. Engage an installer who employs workers for this Project who are trained or certified by floor tile manufacturer for installation techniques required.

1.7 DELIVERY, STORAGE, AND HANDLING

A. Store floor tile and installation materials in dry spaces protected from the weather, with ambient temperatures maintained within range recommended by manufacturer, but not less than 50 deg F (10 deg C) or more than 90 deg F (32 deg C). Store floor tiles on flat surfaces.

1.8 FIELD CONDITIONS

A. Maintain ambient temperatures within range recommended by manufacturer, but not less than 70 deg F (21 deg C) or more than 95 deg F (35 deg C), in spaces to receive floor tile during the following time periods:

1. 48 hours before installation.
2. During installation.
3. 48 hours after installation.

B. After installation and until Substantial Completion, maintain ambient temperatures within range recommended by manufacturer, but not less than 55 deg F (13 deg C) or more than 95 deg F (35 deg C).

C. Close spaces to traffic during floor tile installation.

D. Close spaces to traffic for 48 hours after floor tile installation.

E. Install floor tile after other finishing operations, including painting, have been completed.

PART 2 - PRODUCTS

2.1 LUXURY VINYL FLOOR TILE **(LVT-1)**

A. Products: Subject to compliance with requirements, provide products complying with ASTM F 1700 and indicated by manufacturer's designations on the Drawings.

B. Tile Standard: ASTM F1700.

1. Class: As indicated by product designations.

C. Thickness: 0.125 inch (3.2 mm).

D. Size: As indicated by manufacturer's designations on the Finish Schedule.

E. Colors and Patterns: As indicated on Finish Schedule.

2.2 INSTALLATION MATERIALS

A. Trowelable Leveling and Patching Compounds: Latex-modified, portland cement based or blended hydraulic-cement-based formulation provided or approved by floor tile manufacturer for applications indicated.

B. Adhesives: Water-resistant type recommended by floor tile and adhesive manufacturers to suit floor tile and substrate conditions indicated.

PART 3 - EXECUTION

3.1 EXAMINATION

A. Examine substrates, with Installer present, for compliance with requirements for maximum moisture content and other conditions affecting performance of the Work.

1. Verify that finishes of substrates comply with tolerances and other requirements specified in other Sections and that substrates are free of cracks, ridges, depressions, scale, and foreign deposits that might interfere with adhesion of floor tile.

B. Proceed with installation only after unsatisfactory conditions have been corrected.

3.2 PREPARATION

A. Prepare substrates according to floor tile manufacturer's written instructions to ensure adhesion of resilient products.

B. Concrete Substrates: Prepare according to ASTM F 710.

1. Verify that substrates are dry and free of curing compounds, sealers, and hardeners.
2. Remove substrate coatings and other substances that are incompatible with adhesives and that contain soap, wax, oil, or silicone, using mechanical methods recommended by floor tile manufacturer. Do not use solvents.
3. Alkalinity and Adhesion Testing: Perform tests recommended by floor tile manufacturer. Proceed with installation only after substrate alkalinity falls within range on pH scale recommended by manufacturer in writing, but not less than 5 or more than 10 pH.
4. Moisture Testing: Proceed with installation only after substrates pass testing according to floor tile manufacturer's written recommendations, but not less stringent than the following:
   a. Perform relative humidity test using in situ probes according to ASTM F 2170. Proceed with installation only after substrates are below the maximum allowed by the manufacturer for relative humidity.

C. Fill cracks, holes, and depressions in substrates with trowelable leveling and patching compound; remove bumps and ridges to produce a uniform and smooth substrate.

D. Do not install floor tiles until they are the same temperature as the space where they are to be installed.

1. At least 48 hours in advance of installation, move resilient floor tile and installation materials into spaces where they will be installed.

E. Immediately before installation, sweep and vacuum clean substrates to be covered by resilient floor tile.

3.3 FLOOR TILE INSTALLATION

A. Comply with manufacturer's written instructions for installing floor tile.

B. Lay out floor tiles from center marks established with principal walls, discounting minor offsets, so tiles at opposite edges of room are of equal width. Adjust as necessary to avoid using cut widths that equal less than one-half tile at perimeter.

1. Lay tiles square with room axis or in pattern shown.

C. Match floor tiles for color and pattern by selecting tiles from cartons in the same sequence as manufactured and packaged, if so numbered. Discard broken, cracked, chipped, or deformed tiles.

1. Lay tiles with grain direction alternating in adjacent tiles (basket-weave pattern).

D. Scribe, cut, and fit floor tiles to butt neatly and tightly to vertical surfaces and permanent fixtures including built-in furniture, cabinets, pipes, outlets, and door frames.

E. Extend floor tiles into toe spaces, door reveals, closets, and similar openings. Extend floor tiles to center of door openings.

F. Maintain reference markers, holes, and openings that are in place or marked for future cutting by repeating on floor tiles as marked on substrates. Use chalk or other nonpermanent marking device.

G. Install floor tiles on covers for telephone and electrical ducts, building expansion-joint covers, and similar items in finished floor areas. Maintain overall continuity of color and pattern between pieces of tile installed on covers and adjoining tiles. Tightly adhere tile edges to substrates that abut covers and to cover perimeters.

H. Adhere floor tiles to flooring substrates using a full spread of adhesive applied to substrate to produce a completed installation without open cracks, voids, raising and puckering at joints, telegraphing of adhesive spreader marks, and other surface imperfections.

3.4 CLEANING AND PROTECTION

A. Comply with manufacturer's written instructions for cleaning and protecting floor tile.

B. Perform the following operations immediately after completing floor tile installation:

1. Remove adhesive and other blemishes from exposed surfaces.
2. Sweep and vacuum surfaces thoroughly.
3. Damp-mop surfaces to remove marks and soil.

C. Protect floor tile from mars, marks, indentations, and other damage from construction operations and placement of equipment and fixtures during remainder of construction period.

D. Cover floor tile until Substantial Completion.

END OF SECTION 096519

SECTION 096566 - RESILIENT ATHLETIC FLOORING

PART 1 - GENERAL

1.1 RELATED DOCUMENTS

A. Drawings and general provisions of the Contract, including General and Supplementary Conditions and Division 01 Specification Sections, apply to this Section.

1.2 SUMMARY

A. Section Includes:

1. Rubber sheet flooring.

B. Related Sections:
1. Section 096513 "Resilient Base and Accessories" for wall base and accessories installed with flooring.

1.3 ACTION SUBMITTALS

A. Product Data: For each type of product indicated.

B. Shop Drawings: Show installation details and locations of the following:

1. Border tiles.
2. Floor patterns.
3. Layout, colors, widths, and dimensions of game lines and markers.
4. Locations of floor inserts for athletic equipment installed through flooring.
5. Seam locations for sheet flooring.

C. Samples for Initial Selection: For each type of resilient athletic flooring.

1. Game-Line and Marker Paint: Include charts showing available colors and glosses.

1.4 CLOSEOUT SUBMITTALS

A. Maintenance Data: For flooring to include in maintenance manuals.

1.5 MATERIALS MAINTENANCE SUBMITTALS

A. Furnish extra materials, before installation begins, that match products installed and that are packaged with protective covering for storage and identified with labels describing contents.

1. Floor Tile: Furnish no fewer than 1 box for each 50 boxes or fraction thereof, of each type, color, pattern, and size of floor tile installed.
2. Sheet Flooring: Furnish full-width rolls of not less than 10 linear feet (3 linear m) for each 500 linear feet (150 linear m) or fraction thereof, of each type, color, and pattern of flooring installed.

1.6 DELIVERY, STORAGE, AND HANDLING

A. Deliver materials in original packages and containers, with seals unbroken, bearing manufacturer's labels indicating brand name and directions for storing.

B. Store materials to prevent deterioration. Store tiles on flat surfaces and rolls upright.

1.7 FIELD CONDITIONS

A. Adhesively Applied Products:

1. Maintain temperatures during installation within range recommended in writing by manufacturer. If manufacturer has no published data, maintain ambient temperature between 70 and 95 deg F, in spaces to receive flooring 48 hours before installation, during installation, and 48 hours after installation unless longer period is recommended in writing by manufacturer.
2. After postinstallation period, maintain temperatures within range recommended in writing by manufacturer. If manufacturer has no published data, maintain ambient temperature between 55 and 95 deg F.
3. Close spaces to traffic during flooring installation.
4. Close spaces to traffic for 48 hours after flooring installation unless manufacturer recommends longer period in writing.

B. Install flooring after other finishing operations, including painting, have been completed.

1.8 COORDINATION

A. Coordinate layout and installation of flooring with floor inserts for gymnasium equipment.

PART 2 - PRODUCTS

2.1 RUBBER SHEET FLOORING – **SF-1**

A. Manufacturers: Subject to compliance with requirements, provide the product in the Finish List on the Drawings.

B. Description: Dual durometer, rubber sheet flooring provided as rolled goods for adhered installation.

C. Material: Rubber compound.

D. Traffic-Surface Texture: Smooth.

E. Roll Size: Not less than 48 inches wide by longest length that is practical to minimize splicing during installation.

F. Thickness: 14.5 mm.

G. Color and Pattern: As indicated on Finish Plans.

2.2 ACCESSORIES

A. Trowelable Leveling and Patching Compound: Latex-modified, hydraulic-cement-based formulation approved by flooring manufacturer.

B. Adhesives: Water-resistant type recommended in writing by manufacturer for substrate and conditions indicated.

PART 3 - EXECUTION

3.1 EXAMINATION

A. Examine substrates, with Installer present, for compliance with requirements for installation tolerances, moisture content, and other conditions affecting performance of the Work.

1. Verify that finishes of substrates comply with tolerances and other requirements specified in other Sections and that substrates are free of cracks, ridges, depressions, scale, and foreign deposits that might interfere with adhesion of resilient products.

B. Proceed with installation only after unsatisfactory conditions have been corrected.

3.2 PREPARATION

A. Prepare substrates according to manufacturer's written recommendations to ensure adhesion of flooring.

B. Concrete Substrates: Prepare according to ASTM F 710.

1. Verify that substrates are dry and free of curing compounds, sealers, and hardeners.
2. Alkalinity Testing: Perform pH testing according to ASTM F 710. Proceed with installation only if pH readings within manufacturer recommendations.
3. Moisture Testing:

a. Perform relative humidity test using in-situ probes, ASTM F 2170. Proceed with installation only after substrates have a maximum percent relative humidity level allowed by the manufacturer.

C. Remove substrate coatings and other substances that are incompatible with adhesives and that contain soap, wax, oil, or silicone, using mechanical methods recommended in writing by manufacturer. Do not use solvents.

D. Use trowelable leveling and patching compound to fill cracks, holes, and depressions in substrates.

E. Move flooring and installation materials into spaces where they will be installed at least 48 hours in advance of installation unless manufacturer recommends a longer period in writing.

1. Do not install flooring until they are same temperature as space where they are to be installed.

F. Sweep and vacuum clean substrates to be covered by flooring immediately before installation. After cleaning, examine substrates for moisture, alkaline salts, carbonation, and dust.

G. Proceed with installation only after unsatisfactory conditions have been corrected.

3.3 FLOORING INSTALLATION, GENERAL

A. Comply with manufacturer's written installation instructions.

B. Scribe, cut, and fit flooring to butt neatly and tightly to vertical surfaces, equipment anchors, floor outlets, and other interruptions of floor surface.

C. Extend flooring into toe spaces, door reveals, closets, and similar openings unless otherwise indicated.

D. Maintain reference markers, holes, and openings that are in place or marked for future cutting by repeating subfloor markings on flooring. Use nonpermanent, nonstaining marking device.

3.4 SHEET FLOORING INSTALLATION

A. Unroll sheet flooring and allow it to stabilize before cutting and fitting.

B. Lay out sheet flooring as follows:

1. Maintain uniformity of flooring direction.
2. Minimize number of seams; place seams in inconspicuous and low-traffic areas, at least 6 inches (150 mm) away from parallel joints in flooring substrates.
3. Match edges of flooring for color shading at seams.
4. Locate seams per approved Shop Drawings.

C. Adhered Flooring: Adhere products to substrates using a full spread of adhesive applied to substrate to comply with adhesive and flooring manufacturers' written instructions, including those for trowel notching, adhesive mixing, and adhesive open and working times.

1. Provide completed installation without open cracks, voids, raising and puckering at joints, telegraphing of adhesive spreader marks, and other surface imperfections.

3.5 CLEANING AND PROTECTING

A. Perform the following operations immediately after completing flooring installation:

1. Remove adhesive and other blemishes from flooring surfaces.
2. Sweep and vacuum flooring thoroughly.
3. Damp-mop flooring to remove marks and soil after time period recommended in writing by manufacturer.

B. Protect flooring from mars, marks, indentations, and other damage from construction operations and placement of equipment and fixtures during remainder of construction period. Use protection methods recommended in writing by manufacturer.

1. Do not move heavy and sharp objects directly over flooring. Protect flooring with plywood or hardboard panels to prevent damage from storing or moving objects over flooring.

END OF SECTION 096566

SECTION 097200 - WALL COVERINGS

PART 1 - GENERAL

1.1 RELATED DOCUMENTS

A. Drawings and general provisions of the Contract, including General and Supplementary Conditions and Division 01 Specification Sections, apply to this Section.

1.2 SUMMARY

A. Section Includes:
   1. Acoustical wall covering.

1.3 PREINSTALLATION MEETINGS

A. Preinstallation Conference: Conduct conference at Project site.

1.4 ACTION SUBMITTALS

A. Product Data: For each type of product.

   1. Include data on physical characteristics, durability, fade resistance, and fire-test-response characteristics.

B. Shop Drawings: Show location and extent of each wall-covering type. Indicate pattern placement seams and termination points.

C. Samples for Initial Selection: For each type of wall covering, minimum 12 inches x 12 inches.

D. Product Schedule: For wall coverings. Use same designations indicated on Drawings.

1.5 INFORMATIONAL SUBMITTALS

A. Product Test Reports: For each wall covering, for tests performed by a qualified testing agency.

1.6 CLOSEOUT SUBMITTALS

A. Maintenance Data: For wall coverings to include in maintenance manuals.

1.7 MAINTENANCE MATERIAL SUBMITTALS

A. Furnish extra materials, from the same production run, that match products installed and that are packaged with protective covering for storage and identified with labels describing contents.

1. Wall-Covering Materials: For each type, color, texture, and finish, full width by length to equal to 5 percent of amount installed.

1.8 FIELD CONDITIONS

A. Environmental Limitations: Do not deliver or install wall coverings until spaces are enclosed and weathertight, wet-work in spaces is complete and dry, work above ceilings is complete, and HVAC system is operating and maintaining ambient temperature and humidity conditions at levels intended for occupants after Project completion during the remainder of the construction period.

B. Lighting: Do not install wall covering until lighting that matches conditions intended for occupants after Project completion is provided on the surfaces to receive wall covering.

C. Ventilation: Provide continuous ventilation during installation and for not less than the time recommended by wall-covering manufacturer for full drying or curing.

PART 2 - PRODUCTS

2.1 PERFORMANCE REQUIREMENTS

A. Fire-Test-Response Characteristics: As determined by testing identical wall coverings applied with identical adhesives to substrates in accordance with test method indicated below by a qualified testing agency. Identify products with appropriate markings of applicable testing agency.

1. Surface-Burning Characteristics: Comply with ASTM E84; testing by a qualified testing agency. Identify products with appropriate markings of applicable testing agency.

a. Flame-Spread Index: 25 or less.
b. Smoke-Developed Index: 450 or less.

2. Fire-Growth Contribution: No flashover and heat and smoke release when tested in accordance with NFPA 265.

2.2 ACOUSTICAL WALL COVERING **(AWC-1)**

A. Basis-of-Design Product: Subject to compliance with requirements, provide product indicated on Drawings.

2.3 ACCESSORIES

A. Adhesive: Mildew-resistant, nonstaining, strippable adhesive, for use with specific wall covering and substrate application indicated and as recommended in writing by wall-covering manufacturer.

B. Primer/Sealer: Mildew resistant, complying with and recommended in writing by primer/sealer and wall-covering manufacturers for intended substrate.

C. Seam Tape: As recommended in writing by wall-covering manufacturer.

PART 3 - EXECUTION

3.1 EXAMINATION

A. Examine substrates and conditions, with Installer present, for compliance with requirements for installation surfaces being true in plane and vertical and horizontal alignment, maximum moisture content, and other conditions affecting performance of the Work.

B. Proceed with installation only after unsatisfactory conditions have been corrected.

3.2 PREPARATION

A. Comply with manufacturer's written instructions for surface preparation.

B. Clean substrates of substances that could impair bond of wall covering, including dirt, oil, grease, mold, and mildew.

C. Prepare substrates to achieve a smooth, dry, clean, structurally sound surface free of flaking, unsound coatings, cracks, and defects.

1. Moisture Content: Maximum of 5 percent on new plaster, concrete, and concrete masonry units when tested with an electronic moisture meter.
2. Plaster: Allow plaster to cure for at least 90 days. Neutralize areas of high alkalinity. Apply primer/sealer as recommended in writing by primer/sealer manufacturer and wall-covering manufacturer.
3. Gypsum Board: Apply primer/sealer as recommended in writing by primer/sealer manufacturer and wall-covering manufacturer.

D. Remove hardware and hardware accessories, electrical plates and covers, light fixture trims, and similar items.

E. Acclimatize wall-covering materials by removing them from packaging in the installation areas not less than 24 hours before installation.

3.3 INSTALLATION OF WALL COVERING

A. Comply with wall-covering manufacturers' written installation instructions applicable to products and applications indicated.

B. Cut wall-covering strips in roll number sequence. Change the roll numbers at partition breaks and corners.

C. Install strips in same order as cut from roll.

1. For solid-color, even-texture, or random-match wall coverings, reverse every other strip.

D. Install wall covering without lifted or curling edges and without visible shrinkage.

E. Match pattern 72 inches (1828 mm) above the finish floor.

F. Install seams vertical and plumb at least 6 inches (152 mm) from outside corners and 6 inches (152 mm) from inside corners unless a change of pattern or color exists at corner. Horizontal seams are not permitted.

G. Trim edges and seams for color uniformity, pattern match, and tight closure. Butt seams without overlaps or gaps between strips.

H. Fully bond wall covering to substrate. Remove air bubbles, wrinkles, blisters, and other defects.

3.4 CLEANING

A. Remove excess adhesive at seams, perimeter edges, and adjacent surfaces.

B. Use cleaning methods recommended in writing by wall-covering manufacturer.

C. Replace strips that cannot be cleaned.

D. Reinstall hardware and hardware accessories, electrical plates and covers, light fixture trims, and similar items.

END OF SECTION 097200

SECTION 097723 - FABRIC-WRAPPED PANELS

PART 1 - GENERAL

1.1 RELATED DOCUMENTS

A. Drawings and general provisions of the Contract, including General and Supplementary Conditions and Division 01 Specification Sections, apply to this Section.

1.2 SUMMARY

A. Section includes shop-fabricated, fabric-wrapped wall panels.

1.3 ACTION SUBMITTALS

A. Product Data: For each type of product.

1. Include fabric facing, panel edge, core material, and mounting indicated.

B. Shop Drawings: For panel assembly and installation.

1. Include plans, elevations, sections, and mounting devices and details.
2. Include details at panel head, base, joints, and corners; and details at ceiling, floor base, and wall intersections. Indicate panel edge profile and core materials.
3. Include details at cutouts and penetrations for other work.
4. Include direction of fabric weave and pattern matching.

C. Samples for Initial Selection: For each type of fabric facing.

1. Include Samples of hardware, fabric and accessories involving color or finish selection.

1.4 INFORMATIONAL SUBMITTALS

A. Coordination Drawings: Elevations and other details, drawn to scale, on which the following items are shown and coordinated with each other, using input from installers of the items involved:

1. Electrical outlets, switches, and thermostats.
2. Items penetrating or covered by panels including the following:

a. Lighting fixtures.
b. Air outlets and inlets.
c. Speakers.
d. Alarms.
e. Sprinklers.

f. Access panels.

B. Product Certificates: For each type of panel.

1.5 CLOSEOUT SUBMITTALS

A. Maintenance Data: For each type of panel to include in maintenance manuals. Include fabric manufacturers' written cleaning and stain-removal instructions.

1.6 DELIVERY, STORAGE, AND HANDLING

A. Comply with fabric and panel manufacturers' written instructions for minimum and maximum temperature and humidity requirements for shipment, storage, and handling.

B. Deliver materials and panels in unopened bundles and store in a temperature-controlled dry place with adequate air circulation.

1.7 FIELD CONDITIONS

A. Environmental Limitations: Do not install panels until spaces are enclosed and weathertight, wet-work in spaces is complete and dry, work at and above ceilings is complete, and ambient temperature and humidity conditions are maintained at the levels indicated for Project when occupied for its intended use.

B. Lighting: Do not install panels until a permanent level of lighting is provided on surfaces to receive the panels.

C. Air-Quality Limitations: Protect panels from exposure to airborne odors such as tobacco smoke, and install panels under conditions free from odor contamination of ambient air.

D. Field Measurements: Verify panel locations and actual dimensions of openings and penetrations by field measurements before fabrication, and indicate them on Shop Drawings.

1.8 WARRANTY

A. Special Warranty: Manufacturer agrees to repair or replace panels and components that fail in materials or workmanship within specified warranty period.

1. Failures include, but are not limited to, the following:

   a. Fabric sagging, distorting, or releasing from panel edge.
   b. Warping of core.

2. Warranty Period: Two years from date of Substantial Completion.

PART 2 - PRODUCTS

2.1 MANUFACTURERS

A. Source Limitations: Obtain fabric-wrapped wall panels from single source from single manufacturer.

2.2 PERFORMANCE REQUIREMENTS

A. Fire-Test-Response Characteristics: Panels shall comply with "Surface-Burning Characteristics" or "Fire Growth Contribution" Subparagraph below, or both, as determined by testing identical products by UL or another testing and inspecting agency acceptable to authorities having jurisdiction:

1. Surface-Burning Characteristics: Comply with ASTM E84 or UL 723; testing by a qualified testing agency. Identify products with appropriate markings of applicable testing agency.

a. Flame-Spread Index: 25 or less.
b. Smoke-Developed Index: 450 or less.

2. Fire Growth Contribution: Comply with acceptance criteria of local code and authorities having jurisdiction when tested according to NFPA 265 Method B Protocol or NFPA 286.

2.3 FABRIC-WRAPPED WALL PANELS – **(AWP-1)**

A. Fabric-Wrapped Wall Panel: Manufacturer's standard panel construction consisting of facing material laminated to front face, edges, and back edge border of core.

1. Basis-of-Design Product: Subject to compliance with requirements, provide Conwed Designscape; an Owens Corning company; Respond A or a comparable product by one of the following:

a. Armstrong World Industries, Inc.
b. Acoustical Solutions.
c. Decoustics Limited; a Saint Gobain company.
d. Golterman & Sabo.
e. Lamvin, Inc.

2. Panel Shape: Flat.

3. Mounting: Back mounted with manufacturer's standard metal clips or bar hangers, secured to substrate.

4. Core: Glass-fiber board.

a. Core-Face Layer: Manufacturer's standard, high-density board.

5. Edge Construction: Manufacturer's standard chemically hardened core with no frame.

6. Edge Profile: Square.
7. Corner Detail in Elevation: Square with continuous edge profile indicated.
8. Reveals between Panels: Flush reveals.
9. Facing Material: As indicated on Drawings.
10. Nominal Core Thickness: 1 inch (25 mm).
11. Panel Width: As indicated on drawings.
12. Panel Height: As indicated on drawings.

2.4 MATERIALS

A. Core Materials:

1. Glass-Fiber Board: ASTM C612; of type standard with manufacturer; nominal density of 6 to 7 lb/cu. ft. (96 to 112 kg/cu. m), unfaced, and dimensionally stable, molded rigid board; and with maximum flame-spread and smoke-developed indexes of 25 and 50, respectively.

B. Facing Material: Fabric from same dye lot; color and pattern as indicated on Finish Schedule.

C. Mounting Devices: Concealed on back of panel, recommended by manufacturer to support weight of panel, and as follows:
1. Metal Clips or Bar Hangers: Manufacturer's standard two-part metal "Z" clips, with one part of each clip mechanically attached to back of panel and the other part to substrate, designed to permit unit removal.

2.5 FABRICATION

A. Standard Construction: Use manufacturer's standard construction unless otherwise indicated; with facing material applied to face, edges, and back border of dimensionally stable core; and with rigid edges to reinforce panel perimeter against warpage and damage.

B. Edge Hardening: For glass-fiber board cores, chemically harden core edges and areas of core where mounting devices are attached.

C. Facing Material: Apply fabric fully covering visible surfaces of panel; with material stretched straight, on the grain, tight, square, and free from puckers, ripples, wrinkles, sags, blisters, seams, adhesive, or other visible distortions or foreign matter.

1. Square Corners: Tailor corners.
2. Fabrics with Directional or Repeating Patterns or Directional Weave: Mark fabric top and attach fabric in same direction so pattern or weave matches in adjacent panels.

D. Dimensional Tolerances of Finished Panels: Plus or minus 1/16 inch (1.6 mm) for the following:

1. Thickness.
2. Edge straightness.
3. Overall length and width.

4. Squareness from corner to corner.
5. Chords, radii, and diameters.

PART 3 - EXECUTION

3.1 EXAMINATION

A. Examine fabric, fabricated panels, substrates, areas, and conditions for compliance with requirements, installation tolerances, and other conditions affecting panel performance.

B. Proceed with installation only after unsatisfactory conditions have been corrected.

3.2 INSTALLATION

A. Install panels in locations indicated. Unless otherwise indicated, install panels with vertical surfaces and edges plumb, top edges level and in alignment with other panels, faces flush, and scribed to fit adjoining work accurately at borders and at penetrations.

B. Comply with manufacturer's written instructions for installation of panels using type of mounting devices indicated. Mount panels securely to supporting substrate.

C. Align fabric pattern and grain with adjacent panels.

3.3 INSTALLATION TOLERANCES

A. Variation from Plumb and Level: Plus or minus 1/16 inch (1.6 mm) in 48 inches (1200 mm), noncumulative.

B. Variation of Joint Width: Not more than 1/16 inch (1.6 mm) wide from hairline in 48 inches (1200 mm), noncumulative.

3.4 CLEANING

A. Clip loose threads; remove pills and extraneous materials.

B. Clean panels on completion of installation to remove dust and other foreign materials according to manufacturer's written instructions.

END OF SECTION 097723

SECTION 099113 - EXTERIOR PAINTING

PART 1 - GENERAL

1.1 RELATED DOCUMENTS

A. Drawings and general provisions of the Contract, including General and Supplementary Conditions and Division 01 Specification Sections, apply to this Section.

1.2 SUMMARY

A. Section includes surface preparation and the application of paint systems on the following exterior substrates:
   1. Steel.

1.3 DEFINITIONS

A. MPI Gloss Level 1: Not more than five units at 60 degrees and 10 units at 85 degrees, according to ASTM D 523.

B. MPI Gloss Level 3: 10 to 25 units at 60 degrees and 10 to 35 units at 85 degrees, according to ASTM D 523.

C. MPI Gloss Level 4: 20 to 35 units at 60 degrees and not less than 35 units at 85 degrees, according to ASTM D 523.

D. MPI Gloss Level 5: 35 to 70 units at 60 degrees, according to ASTM D 523.

E. MPI Gloss Level 6: 70 to 85 units at 60 degrees, according to ASTM D 523.

F. MPI Gloss Level 7: More than 85 units at 60 degrees, according to ASTM D 523.

1.4 ACTION SUBMITTALS

A. Product Data: For each type of product. Include preparation requirements and application instructions.

   1. Include printout of current "MPI Approved Products List" for each product category specified, with the proposed product highlighted.
   2. Indicate VOC content.

B. Samples for Initial Selection: For each type of topcoat product.

C. Samples for Verification: For each type of paint system and each color and gloss of topcoat.

1. Submit Samples on rigid backing, 8 inches (200 mm) square.
2. Apply coats on Samples in steps to show each coat required for system.
3. Label each coat of each Sample.
4. Label each Sample for location and application area.

D. Product List: Cross-reference to paint system and locations of application areas. Use same designations indicated on Drawings and in schedules. Include color designations.

1.5 MAINTENANCE MATERIAL SUBMITTALS

A. Furnish extra materials that match products installed and that are packaged with protective covering for storage and identified with labels describing contents.

1. Paint: 1 gal. (3.8 L) of each material and color applied, including primers.

1.6 DELIVERY, STORAGE, AND HANDLING

A. Store materials not in use in tightly covered containers in well-ventilated areas with ambient temperatures continuously maintained at not less than 45 deg F (7 deg C).

1. Maintain containers in clean condition, free of foreign materials and residue.
2. Remove rags and waste from storage areas daily.

1.7 FIELD CONDITIONS

A. Apply paints only when temperature of surfaces to be painted and ambient air temperatures are between 50 and 95 deg F (10 and 35 deg C).

B. Do not apply paints in snow, rain, fog, or mist; when relative humidity exceeds 85 percent; at temperatures less than 5 deg F (3 deg C) above the dew point; or to damp or wet surfaces.

PART 2 - PRODUCTS

2.1 MANUFACTURERS

A. Manufacturers: Subject to compliance with requirements, provide products by one of the following:

1. Benjamin Moore & Co.
2. PPG Architectural Coatings.
3. Sherwin-Williams Company (The).
4. Tnemec.

B. Products: Subject to compliance with requirements, provide one of the products listed in the Exterior Painting Schedule for the paint category indicated.

2.2 PAINT, GENERAL

A. MPI Standards: Products shall comply with MPI standards indicated and shall be listed in its "MPI Approved Products Lists."

B. Material Compatibility:

1. Materials for use within each paint system shall be compatible with one another and substrates indicated, under conditions of service and application as demonstrated by manufacturer, based on testing and field experience.
2. For each coat in a paint system, products shall be recommended in writing by topcoat manufacturers for use in paint system and on substrate indicated.

C. Colors: Match Architect's samples.

PART 3 - EXECUTION

3.1 EXAMINATION

A. Examine substrates and conditions, with Applicator present, for compliance with requirements for maximum moisture content and other conditions affecting performance of the Work.

B. Maximum Moisture Content of Substrates: When measured with an electronic moisture meter as follows:

1. Concrete: 12 percent.
2. Masonry (Clay and CMUs): 12 percent.

C. Verify suitability of substrates, including surface conditions and compatibility, with existing finishes and primers.

D. Proceed with coating application only after unsatisfactory conditions have been corrected.

1. Application of coating indicates acceptance of surfaces and conditions.

3.2 PREPARATION

A. Comply with manufacturer's written instructions and recommendations in "MPI Architectural Painting Specification Manual" applicable to substrates and paint systems indicated.

B. Remove hardware, covers, plates, and similar items already in place that are removable and are not to be painted. If removal is impractical or impossible because of size or weight of item, provide surface-applied protection before surface preparation and painting.

1. After completing painting operations, use workers skilled in the trades involved to reinstall items that were removed. Remove surface-applied protection.

C. Clean substrates of substances that could impair bond of paints, including dust, dirt, oil, grease, and incompatible paints and encapsulants.

1. Remove incompatible primers and reprime substrate with compatible primers or apply tie coat as required to produce paint systems indicated.

D. Concrete Substrates: Remove release agents, curing compounds, efflorescence, and chalk. Do not paint surfaces if moisture content or alkalinity of surfaces to be painted exceeds that permitted in manufacturer's written instructions.

E. Masonry Substrates: Remove efflorescence and chalk. Do not paint surfaces if moisture content or alkalinity of surfaces or mortar joints exceeds that permitted in manufacturer's written instructions.

3.3 APPLICATION

A. Apply paints according to manufacturer's written instructions and recommendations in "MPI Architectural Painting Specification Manual."

1. Use applicators and techniques suited for paint and substrate indicated.
2. Paint surfaces behind movable items same as similar exposed surfaces. Before final installation, paint surfaces behind permanently fixed items with prime coat only.
3. Paint both sides and edges of exterior doors and entire exposed surface of exterior door frames.
4. Paint entire exposed surface of window frames and sashes.
5. Do not paint over labels of independent testing agencies or equipment name, identification, performance rating, or nomenclature plates.
6. Primers specified in painting schedules may be omitted on items that are factory primed or factory finished if acceptable to topcoat manufacturers.

B. Tint undercoats same color as topcoat, but tint each undercoat a lighter shade to facilitate identification of each coat if multiple coats of same material are to be applied. Provide sufficient difference in shade of undercoats to distinguish each separate coat.

C. If undercoats or other conditions show through topcoat, apply additional coats until cured film has a uniform paint finish, color, and appearance.

D. Apply paints to produce surface films without cloudiness, spotting, holidays, laps, brush marks, roller tracking, runs, sags, ropiness, or other surface imperfections. Cut in sharp lines and color breaks.

3.4 CLEANING AND PROTECTION

A. At end of each workday, remove rubbish, empty cans, rags, and other discarded materials from Project site.

B. After completing paint application, clean spattered surfaces. Remove spattered paints by washing, scraping, or other methods. Do not scratch or damage adjacent finished surfaces.

C. Protect work of other trades against damage from paint application. Correct damage to work of other trades by cleaning, repairing, replacing, and refinishing, as approved by Architect, and leave in an undamaged condition.

D. At completion of construction activities of other trades, touch up and restore damaged or defaced painted surfaces.

3.5 EXTERIOR PAINTING SCHEDULE

A. Steel and Iron Substrates, including but not limited to lintels, exterior doors and frames.

1. Direct to Metal Enamel System MPI #153:

a. Prime Coat: Primer, alkyd, anticorrosive, for metal.
   1) BM: Super Spec Alkyd Metal Primer HP04.
   2) PPG: Pitt-Tech 90-712.
   3) Sherwin Williams: Pro Industrial Pro-Cryl, B66-1300 series
   4)

b. Intermediate Coat: Match topcoat.

c. Topcoat: Alkyd, exterior, semi-gloss (MPI Gloss Level 5).
   1) BM: Super Spec HP Alkyd Semi-Gloss Enamel HP29.
   2) PPG: Pitt Tech Plus EP DTM Acrylic 90-1610.
   3) Sherwin Williams; Pro Industrial DTM, B66W00011.

END OF SECTION 099113

SECTION 099123 - INTERIOR PAINTING

PART 1 - GENERAL

1.1 RELATED DOCUMENTS

A. Drawings and general provisions of the Contract, including General and Supplementary Conditions and Division 01 Specification Sections, apply to this Section.

1.2 SUMMARY

A. Section includes surface preparation and the application of paint systems on the following interior substrates:

1. Concrete.
2. Masonry
3. Steel and iron.
4. Galvanized metal.
5. Gypsum board.

B. Painting of ductwork, conduit, sprinkler piping, HVAC piping, plumbing and drain piping in exposed areas when attached to, suspended from, or adjacent to Glu-Lam beams or wood roof decking. Paint of MEP items in Mechanical or Electrical Rooms is not required.

C. Related Requirements:

1. Section 051200 "Structural Steel Framing" for shop priming structural steel.
2. Section 055000 "Metal Fabrications" for shop priming metal fabrications.

1.3 DEFINITIONS

A. MPI Gloss Level 1: Not more than five units at 60 degrees and 10 units at 85 degrees, according to ASTM D 523.

B. MPI Gloss Level 2: Not more than 10 units at 60 degrees and 10 to 35 units at 85 degrees, according to ASTM D 523.

C. MPI Gloss Level 3: 10 to 25 units at 60 degrees and 10 to 35 units at 85 degrees, according to ASTM D 523.

D. MPI Gloss Level 4: 20 to 35 units at 60 degrees and not less than 35 units at 85 degrees, according to ASTM D 523.

E. MPI Gloss Level 5: 35 to 70 units at 60 degrees, according to ASTM D 523.

F. MPI Gloss Level 6: 70 to 85 units at 60 degrees, according to ASTM D 523.

G. MPI Gloss Level 7: More than 85 units at 60 degrees, according to ASTM D 523.

1.4 ACTION SUBMITTALS

A. Product Data: For each type of product. Include preparation requirements and application instructions.

1. Include Printout of current "MPI Approved Products List" for each product category specified, with the proposed product highlighted.
2. Indicate VOC content.

B. Samples for Verification: For each type of paint system and in each color and gloss of topcoat.

1. Submit Samples on rigid backing, 8 inches (200 mm) square.
2. Label each Sample for location and application area.

C. Product List: Cross-reference to paint system and locations of application areas. Use same designations indicated on Drawings and in schedules. Include color designations.

1.5 MAINTENANCE MATERIAL SUBMITTALS

A. Furnish extra materials that match products installed and that are packaged with protective covering for storage and identified with labels describing contents.

1. Paint: 5 percent, but not less than 1 gal. (3.8 L) of each material and color applied.

1.6 DELIVERY, STORAGE, AND HANDLING

A. Store materials not in use in tightly covered containers in well-ventilated areas with ambient temperatures continuously maintained at not less than 45 deg F (7 deg C).

1. Maintain containers in clean condition, free of foreign materials and residue.
2. Remove rags and waste from storage areas daily.

1.7 FIELD CONDITIONS

A. Apply paints only when temperature of surfaces to be painted and ambient air temperatures are acceptable to manufacturer. If manufacturer does not have published criteria, apply only when temperatures are between 50 and 95 deg F (10 and 35 deg C).

B. Do not apply paints when relative humidity exceeds amount recommended by manufacturer. If manufacturer does not have published criteria, do not apply when humidity exceeds 85 percent; at temperatures less than 5 deg F (3 deg C) above the dew point; or to damp or wet surfaces.

PART 2 - PRODUCTS

2.1 MANUFACTURERS

A. Manufacturers: Subject to compliance with requirements, provide products by one of the following:

1. Sherwin-Williams Company (The).
2. Dunn-Edwards.
3. Benjamin Moore & Co.
4. PPG Architectural Coatings.

B. Products: Subject to compliance with requirements, provide one of the products listed in the Interior Painting Schedule for the paint category indicated.
1. All products must meet California emissions requirements. If listed product does not comply, provide alternate product.

2.2 PAINT, GENERAL

A. MPI Standards: Products shall comply with MPI standards indicated and shall be listed in its "MPI Approved Products Lists."

B. Material Compatibility:

1. Materials for use within each paint system shall be compatible with one another and substrates indicated, under conditions of service and application as demonstrated by manufacturer, based on testing and field experience.
2. For each coat in a paint system, products shall be recommended in writing by topcoat manufacturers for use in paint system and on substrate indicated.

C. VOC Content: For field applications that are inside the weatherproofing system, paints and coatings shall comply with VOC content limits of authorities having jurisdiction and the following VOC content limits:

1. Flat Paints and Coatings: 50 g/L.
2. Nonflat Paints and Coatings: 50 g/L.
3. Dry-Fog Coatings: 150 g/L.
4. Primers, Sealers, and Undercoaters: 100 g/L.
5. Rust-Preventive Coatings: 100 g/L.
6. Zinc-Rich Industrial Maintenance Primers: 100 g/L.
7. Pretreatment Wash Primers: 420 g/L.
8. Shellacs, Clear: 730 g/L.
9. Shellacs, Pigmented: 550 g/L.

D. Colors: As indicated in a color schedule.

2.3 SOURCE QUALITY CONTROL

A. Testing of Paint Materials: Owner reserves the right to invoke the following procedure:

1. Owner will engage the services of a qualified testing agency to sample paint materials. Contractor will be notified in advance and may be present when samples are taken. If paint materials have already been delivered to Project site, samples may be taken at Project site. Samples will be identified, sealed, and certified by testing agency.
2. Testing agency will perform tests for compliance with product requirements.
3. Owner may direct Contractor to stop applying paints if test results show materials being used do not comply with product requirements. Contractor shall remove noncomplying paint materials from Project site, pay for testing, and repaint surfaces painted with rejected materials. Contractor will be required to remove rejected materials from previously painted surfaces if, on repainting with complying materials, the two paints are incompatible.

PART 3 - EXECUTION

3.1 EXAMINATION

A. Examine substrates and conditions, with Applicator present, for compliance with requirements for maximum moisture content and other conditions affecting performance of the Work.

B. Maximum Moisture Content of Substrates: When measured with an electronic moisture meter as follows. If manufacturer recommendations are lower than these values, follow those recommendations.:

1. Concrete: 12 percent.
2. Fiber-Cement Board: 12 percent.
3. Masonry (Clay and CMUs): 12 percent.
4. Wood: 15 percent.
5. Gypsum Board: 12 percent.
6. Plaster: 12 percent.

C. Gypsum Board Substrates: Verify that finishing compound is sanded smooth.

D. Verify suitability of substrates, including surface conditions and compatibility, with existing finishes and primers.

E. Proceed with coating application only after unsatisfactory conditions have been corrected.

1. Application of coating indicates acceptance of surfaces and conditions.

3.2 PREPARATION

A. Comply with manufacturer's written instructions and recommendations in "MPI Architectural Painting Specification Manual" applicable to substrates and paint systems indicated.

B. Remove hardware, covers, plates, and similar items already in place that are removable and are not to be painted. If removal is impractical or impossible because of size or weight of item, provide surface-applied protection before surface preparation and painting.

1. After completing painting operations, use workers skilled in the trades involved to reinstall items that were removed. Remove surface-applied protection if any.

C. Clean substrates of substances that could impair bond of paints, including dust, dirt, oil, grease, and incompatible paints and encapsulants.

1. Remove incompatible primers and reprime substrate with compatible primers or apply tie coat as required to produce paint systems indicated.

D. Concrete Substrates: Remove release agents, curing compounds, efflorescence, and chalk. Do not paint surfaces if moisture content or alkalinity of surfaces to be painted exceeds that permitted in manufacturer's written instructions.

E. Masonry Substrates: Remove efflorescence and chalk. Do not paint surfaces if moisture content or alkalinity of surfaces or mortar joints exceeds that permitted in manufacturer's written instructions.

F. Steel Substrates: Remove rust, loose mill scale, and shop primer, if any. Clean using methods recommended in writing by paint manufacturer. but not less than the following:
1. SSPC-SP 3.

G. Shop-Primed Steel Substrates: Clean field welds, bolted connections, and areas where shop paint is abraded. Paint exposed areas with the same material as used for shop priming to comply with SSPC-PA 1 for touching up shop-primed surfaces.

H. Galvanized-Metal Substrates: Remove grease and oil residue from galvanized sheet metal by mechanical methods to produce clean, lightly etched surfaces that promote adhesion of subsequently applied paints.

I. Aluminum Substrates: Remove loose surface oxidation.

J. Wood Substrates:

1. Scrape and clean knots, and apply coat of knot sealer before applying primer.
2. Sand surfaces that will be exposed to view, and dust off.
3. Prime edges, ends, faces, undersides, and backsides of wood.
4. After priming, fill holes and imperfections in the finish surfaces with putty or plastic wood filler. Sand smooth when dried.

3.3 APPLICATION

A. Apply paints according to manufacturer's written instructions and to recommendations in "MPI Manual."

1. Use applicators and techniques suited for paint and substrate indicated.

2. Paint surfaces behind movable equipment and furniture same as similar exposed surfaces. Before final installation, paint surfaces behind permanently fixed equipment or furniture with prime coat only.
3. Paint front and backsides of access panels, removable or hinged covers, and similar hinged items to match exposed surfaces.
4. Do not paint over labels of independent testing agencies or equipment name, identification, performance rating, or nomenclature plates.
5. Primers specified in painting schedules may be omitted on items that are factory primed or factory finished if acceptable to topcoat manufacturers.

B. Tint each undercoat a lighter shade to facilitate identification of each coat if multiple coats of same material are to be applied. Tint undercoats to match color of topcoat, but provide sufficient difference in shade of undercoats to distinguish each separate coat.

C. If undercoats or other conditions show through topcoat, apply additional coats until cured film has a uniform paint finish, color, and appearance.

D. Apply paints to produce surface films without cloudiness, spotting, holidays, laps, brush marks, roller tracking, runs, sags, ropiness, or other surface imperfections. Cut in sharp lines and color breaks.

E. Painting Fire Suppression, Plumbing, HVAC, Electrical, Communication, and Electronic Safety and Security Work:

1. Paint the following work where exposed in occupied spaces, including when attached to or supported from the Glu-Lam beams or wood roof deck:

   a. Equipment, including panelboards.
   b. Uninsulated metal piping.
   c. Uninsulated plastic piping.
   d. Pipe hangers and supports.
   e. Metal conduit.
      1) Conduit attached to exposed Glu-Lam beams or wood roof deck shall be painted.
   f. Plastic conduit.
   g. Duct, equipment, and pipe insulation having insulation covering or other paintable jacket material.
   h. Duct that does not have an exterior jacket or insulation.
   i. Other items as directed by Architect.

2. Paint portions of internal surfaces of metal ducts, without liner, behind air inlets and outlets that are visible from occupied spaces.

3.4 FIELD QUALITY CONTROL

A. Dry Film Thickness Testing: Owner may engage the services of a qualified testing and inspecting agency to inspect and test paint for dry film thickness.

1. Contractor shall touch up and restore painted surfaces damaged by testing.

2. If test results show that dry film thickness of applied paint does not comply with paint manufacturer's written recommendations, Contractor shall pay for testing and apply additional coats as needed to provide dry film thickness that complies with paint manufacturer's written recommendations.

3.5 CLEANING AND PROTECTION

A. At end of each workday, remove rubbish, empty cans, rags, and other discarded materials from Project site.

B. After completing paint application, clean spattered surfaces. Remove spattered paints by washing, scraping, or other methods. Do not scratch or damage adjacent finished surfaces.

C. Protect work of other trades against damage from paint application. Correct damage to work of other trades by cleaning, repairing, replacing, and refinishing, as approved by Architect, and leave in an undamaged condition.

D. At completion of construction activities of other trades, touch up and restore damaged or defaced painted surfaces.

3.6 INTERIOR PAINTING SCHEDULE

A. All products must meet California emissions requirements. If listed product does not comply, provide alternate product.

B. CMU Substrates:

1. Institutional Low-Odor/VOC Latex System MPI INT 4.2E:

a. Block Filler: Block filler, latex, interior/exterior, MPI #4.
   1) Behr Paint; Behr Pro Block Filler PR50
   2) Benjamin Moore & Co.; Ultra-Spec Int/Ext High Build masonry Block Filler #571/K571.
   3) Dunn Edwards; Smooth BLOCFIL Premium, SBSL00
   4) PPG Architectural Finishes, Inc.; Speedhide Int/Ext Masonry Hi Fill Latex Block Filler #6-15XI.
   5) Sherwin-Williams Company PrepRite Int/Ext Block Filler B25W00025.

b. Intermediate Coat: Latex, interior, institutional low odor/VOC, matching topcoat.

c. Topcoat: Latex, interior, institutional low odor/VOC (MPI Gloss Level 3), MPI #145.
   1) Behr Paint; Behr Pro i300 Interior Eggshell Paint #PR330
   2) Benjamin Moore & Co.; Ultra-Spec 500 Interior Latex #T538/F538.
   3) PPG Architectural Finishes, Inc.; Speedhide MAX Latex 6-9410.
   4) Sherwin-Williams Company ProMar 200HP Zero VOC Interior Acrylic Eggshell #B20W01951.

C. Steel Substrates, Acrylic Epoxy System:
   1. All steel substrates including but limited to; exposed structural steel, Hollow Metal Doors and Frames, and interior handrails.
      a. One (1) coat, water based primer:
         1) BEHR: Premium Plus Multi-Surface Primer, 436 (<50 g/L VOC).
         2) Benjamin Moore: Ultra Spec HP Acrylic Metal Primer HP04 (43 g/L VOC).
         3) PPG Paints; Pitt-Tech Plus Waterborne Acrylic Primer/Finish 4020PF (91 g/L VOC).
         4) Sherwin-Williams: Pro Industrial Pro-Cryl Universal Primer, B66-310 (< 100 g/L).
      b. Intermediate Coat: Water based Epoxy, matching topcoat.
      c. Topcoat: Epoxy, semi-gloss, MPI #115 or epoxy having a VOC content of less than 150 g/L.
         1) BEHR: Behr Pro Pre-Catalyzed Waterborne Epoxy Semi-Gloss HP150 (<10 g/L VOC).
         2) Benjamin Moore & Co.; Pre-Catalyzed WB Epoxy V341 .
         3) PPG Architectural Finishes, Inc.; PITT-GLAZE WB1 Pre-Catalyzed Acrylic Water-Borne Epoxy #16-310.
         4) Sherwin-Williams Company; Pre-Catalyzed Waterbased Epoxy K45 series.

D. Galvanized-Metal Substrates:

   1. Institutional Low-Odor/VOC Latex System MPI INT 5.3N:

      a. Prime Coat: Primer, galvanized, water based, MPI #134.
         1) Behr Paint; Premium Plus Exterior Multi-Surface Primer #436.
         2) Benjamin Moore & Co.; Ultra-Spec Acrylic Metal Primer #HP04/FP04.
         3) PPG Architectural Finishes, Inc.; Pitt Tech Plus #90-912.
         4) Sherwin-Williams Company Pro Industrial Pro-Cryl Universal Primer B66W01310.

      b. Intermediate Coat: Latex, interior, institutional low odor/VOC, matching topcoat.

      c. Topcoat: Latex, interior, institutional low odor/VOC, semi-gloss (MPI Gloss Level 5), MPI #147.
         1) Behr Paint; Premium Plus Interior Semi-Gloss #3050
         2) Benjamin Moore & Co.; Ultra-Spec 500 Waterborne Acrylic Gloss #N540/K540.
         3) PPG Architectural Finishes, Inc.; SPEEDHIDE® Interior/Exterior WB Alkyd.
         4) Sherwin-Williams Company Pro Industrial Acrylic Semi-Gloss Coating B66W00651.

E. Gypsum Board Substrates:

   1. Institutional Low-Odor/VOC Latex System MPI INT 9.2M:

      a. Prime Coat: Primer sealer, interior, institutional low odor/VOC, MPI #149.

         1) Dunn-Edwards; Vinylastic Plus Interior Latex Wall Sealer; VNPL00.

2) Benjamin Moore & Co.; ECO SPEC WB Interior Latex Primer N372.
3) PPG Architectural Finishes, Inc.; Speedhide Zero Interior Aero VOC Latex Sealer #6-4900XI
4) Sherwin-Williams Company; ProMar 200 Zero Interior Latex Primer B28W02600

b. Intermediate Coat: Latex, interior, institutional low odor/VOC, matching topcoat.

c. Topcoat: Latex, interior, institutional low odor/VOC (MPI Gloss Level 3), MPI #145.
1) Dunn-Edwards; Spartawall.
2) Benjamin Moore & Co.; ECO SPEC® WB Interior Latex Eggshell N374.
3) PPG Architectural Finishes; Inc. PPG Speedhide zero Interior Zero VOC Eggshell #6-4310.
4) Sherwin-Williams Company ProMar 200HP Zero VOC Interior Acrylic Eggshell #C132.

END OF SECTION 099123

SECTION 099600 - HIGH-PERFORMANCE COATINGS

PART 1 - GENERAL

1.1 RELATED DOCUMENTS

A. Drawings and general provisions of the Contract, including General and Supplementary Conditions and Division 01 Specification Sections, apply to this Section.

1.2 SUMMARY

A. Section includes surface preparation and application of high-performance coating systems on the following substrates:

1. Interior Substrates:

a. Interior gypsum board.

1.3 DEFINITIONS

A. Gloss Level 6: 70 to 85 units at 60 degrees, according to ASTM D 523.

B. Gloss Level 7: More than 85 units at 60 degrees, according to ASTM D 523.

1.4 ACTION SUBMITTALS

A. Product Data: For each type of product indicated. Include preparation requirements and application instructions.

B. Samples for Initial Selection: For each type of topcoat product indicated.

C. Product List: For each product indicated, include the following:

1. Cross-reference to paint system and locations of application areas. Use same designations indicated on Drawings and in schedules.
2. Printout of current "MPI Approved Products List" for each product category specified in Part 2, with the proposed product highlighted.

1.5 MAINTENANCE MATERIAL SUBMITTALS

A. Furnish extra materials, from the same product run, that match products installed and that are packaged with protective covering for storage and identified with labels describing contents.

1. Coatings: 5 percent, but not less than 1 gal. (3.8 L) of each material and color applied.

1.6 DELIVERY, STORAGE, AND HANDLING

A. Store materials not in use in tightly covered containers in well-ventilated areas with ambient temperatures continuously maintained at not less than 45 deg F (7 deg C).

1. Maintain containers in clean condition, free of foreign materials and residue.
2. Remove rags and waste from storage areas daily.

1.7 FIELD CONDITIONS

A. Apply coatings only when temperature of surfaces to be coated and surrounding air temperatures are between 50 and 95 deg F (10 and 35 deg C).

B. Do not apply coatings when relative humidity exceeds 85 percent; at temperatures less than 5 deg F (3 deg C) above the dew point; or to damp or wet surfaces.

C. Do not apply exterior coatings in snow, rain, fog, or mist.

PART 2 - PRODUCTS

2.1 MANUFACTURERS

A. Manufacturers: Subject to compliance with requirements, provide products by one of the following:

1. Benjamin Moore & Co.
2. PPG Paints.
3. Sherwin-Williams Company (The).

2.2 HIGH-PERFORMANCE COATINGS, GENERAL

A. MPI Standards: Products shall comply with MPI standards indicated and shall be listed in its "MPI Approved Products Lists."

B. Material Compatibility:

1. Materials for use within each paint system shall be compatible with one another and substrates indicated, under conditions of service and application as demonstrated by manufacturer, based on testing and field experience.
2. For each coat in a paint system, products shall be recommended in writing by topcoat manufacturers for use in paint system and on substrate indicated.
3. Products shall be of same manufacturer for each coat in a coating system.

C. Colors: As selected by Architect from manufacturer's full range.

2.3 SOURCE QUALITY CONTROL

A. Testing of Coating Materials: Owner reserves the right to invoke the following procedure:

1. Owner will engage the services of a qualified testing agency to sample coating materials. Contractor will be notified in advance and may be present when samples are taken. If coating materials have already been delivered to Project site, samples may be taken at Project site. Samples will be identified, sealed, and certified by testing agency.
2. Testing agency will perform tests for compliance with product requirements.
3. Owner may direct Contractor to stop applying paints if test results show materials being used do not comply with product requirements. Contractor shall remove noncomplying coating materials from Project site, pay for testing, and recoat surfaces coated with rejected materials. Contractor will be required to remove rejected materials from previously coated surfaces if, on recoating with complying materials, the two coatings are incompatible.

PART 3 - EXECUTION

3.1 EXAMINATION

A. Examine substrates and conditions, with Applicator present, for compliance with requirements for maximum moisture content and other conditions affecting performance of the Work.

1. Maximum Moisture Content of Substrates: When measured with an electronic moisture meter as follows:

a. 12 percent.

B. Verify suitability of substrates, including surface conditions and compatibility with existing finishes and primers.

C. Proceed with coating application only after unsatisfactory conditions have been corrected.

1. Beginning coating application constitutes Contractor's acceptance of substrates and conditions.

3.2 PREPARATION

A. Comply with manufacturer's written instructions and recommendations in "MPI Architectural Painting Specification Manual" applicable to substrates indicated.

B. Remove hardware, covers, plates, and similar items already in place that are removable and are not to be painted. If removal is impractical or impossible because of size or weight of item, provide surface-applied protection before surface preparation and painting.

1. After completing painting operations, use workers skilled in the trades involved to reinstall items that were removed. Remove surface-applied protection.

C. Clean substrates of substances that could impair bond of coatings, including dust, dirt, oil, grease, and incompatible paints and encapsulants.

1. Remove incompatible primers and reprime substrate with compatible primers or apply tie coat as required to produce coating systems indicated.

D. Masonry Substrates: Remove efflorescence and chalk. Do not coat surfaces if moisture content or alkalinity of surfaces or if alkalinity of mortar joints exceed that permitted in manufacturer's written instructions.

3.3 APPLICATION

A. Apply high-performance coatings according to manufacturer's written instructions and recommendations in "MPI Architectural Painting Specification Manual."

1. Use applicators and techniques suited for coating and substrate indicated.
2. Coat surfaces behind movable equipment and furniture same as similar exposed surfaces. Before final installation, coat surfaces behind permanently fixed equipment or furniture with prime coat only.
3. Coat back sides of access panels, removable or hinged covers, and similar hinged items to match exposed surfaces.
4. Do not apply coatings over labels of independent testing agencies or equipment name, identification, performance rating, or nomenclature plates.

B. Tint each undercoat a lighter shade to facilitate identification of each coat if multiple coats of the same material are to be applied. Tint undercoats to match color of finish coat, but provide sufficient difference in shade of undercoats to distinguish each separate coat.

C. If undercoats or other conditions show through final coat, apply additional coats until cured film has a uniform coating finish, color, and appearance.

D. Apply coatings to produce surface films without cloudiness, spotting, holidays, laps, brush marks, runs, sags, ropiness, or other surface imperfections. Produce sharp glass lines and color breaks.

3.4 CLEANING AND PROTECTION

A. At end of each workday, remove rubbish, empty cans, rags, and other discarded materials from Project site.

B. After completing coating application, clean spattered surfaces. Remove spattered coatings by washing, scraping, or other methods. Do not scratch or damage adjacent finished surfaces.

C. Protect work of other trades against damage from coating operation. Correct damage by cleaning, repairing, replacing, and recoating, as approved by Architect, and leave in an undamaged condition.

D. At completion of construction activities of other trades, touch up and restore damaged or defaced coated surfaces.

3.5 INTERIOR HIGH-PERFORMANCE COATING SCHEDULE

A. Gypsum Board Substrates:

1. Epoxy System MPI INT 9.2E:

a. Prime Coat: Primer sealer, latex, interior, MPI #50.
b. Intermediate Coat: Epoxy, matching topcoat.
c. Topcoat: Epoxy, gloss, MPI #77.

END OF SECTION 099600

SECTION 101419 - DIMENSIONAL LETTER SIGNAGE

PART 1 - GENERAL

1.1 SUMMARY

A. Section Includes:

1. Fabricated dimensional characters.

1.2 ACTION SUBMITTALS

A. Product Data: For each type of product.

B. Shop Drawings: For dimensional letter signs.

1. Include fabrication and installation details and attachments to other work.
2. Show sign mounting heights, locations of supplementary supports to be provided by others, and accessories.
3. Show message list, typestyles, graphic elements, and layout for each sign at least half size.

C. Samples for Initial Selection: For each type of sign assembly, exposed component, and exposed finish.

1. Include representative Samples of available typestyles and graphic symbols.

PART 2 - PRODUCTS

2.1 DIMENSIONAL CHARACTERS

A. Fabricated Characters: Metal face and side returns formed free from warp and distortion; with uniform faces, sharp corners, and precisely formed lines and profiles; internally braced for stability, to meet structural performance loading without oil-canning or other surface deformation, and for securing fasteners; and as follows.

1. Character Material: Sheet or plate aluminum.
2. Material Thickness: Manufacturer's standard for size and design of character.
3. Character Height: As indicated on Drawings.
4. Finishes:
   a. Integral Aluminum Finish: Clear anodized.

5. Mounting: Projecting studs.

2.2 DIMENSIONAL CHARACTER MATERIALS

A. Aluminum Sheet and Plate: ASTM B209 (ASTM B209M), alloy and temper recommended by aluminum producer and finisher for type of use and finish indicated.

2.3 ACCESSORIES

A. Fasteners and Anchors: Manufacturer's standard as required for secure anchorage of signage, noncorrosive and compatible with each material joined, and complying with the following:

1. Use concealed fasteners and anchors unless indicated to be exposed.
2. For exterior exposure, furnish nonferrous-metal or stainless-steel devices unless otherwise indicated.
3. Sign Mounting Fasteners:

   a. Projecting Studs: Threaded studs with sleeve spacer, welded or brazed to back of sign material, screwed into back of sign assembly, or screwed into tapped lugs cast integrally into back of cast sign material, unless otherwise indicated.

2.4 FABRICATION

A. General: Provide manufacturer's standard sign assemblies according to requirements indicated.

1. Castings: Fabricate castings free of warp, cracks, blowholes, pits, scale, sand holes, and other defects that impair appearance or strength. Grind, wire brush, sandblast, and buff castings to remove seams, gate marks, casting flash, and other casting marks before finishing.

2.5 GENERAL FINISH REQUIREMENTS

A. Protect mechanical finishes on exposed surfaces from damage by applying a strippable, temporary protective covering before shipping.

B. Appearance of Finished Work: Noticeable variations in same piece are not acceptable. Variations in appearance of adjoining components are acceptable if they are within the range of approved Samples and are assembled or installed to minimize contrast.

C. Organic, Anodic, and Chemically Produced Finishes: Apply to formed metal after fabrication but before applying contrasting polished finishes on raised features unless otherwise indicated.

2.6 ALUMINUM FINISHES

A. Clear Anodic Finish: AAMA 611, Class I, 0.018 mm or thicker.

PART 3 - EXECUTION

3.1 EXAMINATION

A. Examine substrates, areas, and conditions, with Installer present, for compliance with requirements for installation tolerances and other conditions affecting performance of signage work.

B. Verify that sign-support surfaces are within tolerances to accommodate signs without gaps or irregularities between backs of signs and support surfaces unless otherwise indicated.

C. Proceed with installation only after unsatisfactory conditions have been corrected.

3.2 INSTALLATION

A. General: Install signs using mounting methods indicated and according to manufacturer's written instructions.

1. Install signs level, plumb, true to line, and at locations and heights indicated, with sign surfaces free of distortion and other defects in appearance.
2. Before installation, verify that sign surfaces are clean and free of materials or debris that would impair installation.
3. Corrosion Protection: Coat concealed surfaces of exterior aluminum in contact with grout, concrete, masonry, wood, or dissimilar metals, with a heavy coat of bituminous paint.

B. Mounting Methods:

1. Projecting Studs: Using a template, drill holes in substrate aligning with studs on back of sign. Remove loose debris from hole and substrate surface.

a. Thin or Hollow Surfaces: Place spacers on studs, place sign in position with spacers pinched between sign and substrate, and install washers and nuts on stud ends projecting through opposite side of surface, and tighten.

END OF SECTION 101419

SECTION 101423 - PANEL SIGNAGE

PART 1 - GENERAL

1.1 SUMMARY

A. Section Includes:

1. Panel signs.

1.2 COORDINATION

A. Furnish templates for placement of sign-anchorage devices embedded in permanent construction by other installers.

1.3 ACTION SUBMITTALS

A. Product Data: For each type of product.

B. Shop Drawings: For panel signs.

1. Include fabrication and installation details and attachments to other work.
2. Show sign mounting heights, locations of supplementary supports to be provided by others, and accessories.
3. Show message list, typestyles, graphic elements, including raised characters and Braille, and layout for each sign at least half size.
4. Message Content Layout Drawings: Furnish scaled face layout drawings for each sign type and unique copy layouts of each sign type for approval. Face layouts drawings shall show type style, type size, type alignment and spacing, spelling, punctuation, word placement on sign face referenced to outline of sign face, line spacing, logos and other composition requirements.

C. Samples for Initial Selection: For each type of sign assembly, exposed component, and exposed finish.

1. Include representative Samples of available typestyles and graphic symbols.

D. Samples for Verification: For each type of sign assembly showing all components and with the required finish(es), in manufacturer's standard size unless otherwise indicated and as follows:

1. Panel Signs: Full-size Sample.
2. Room-Identification Signs: Full-size Sample.
3. Variable Component Materials: Full-size Sample of each base material, character (letter, number, and graphic element) in each exposed color and finish not included in Samples above.
4. Exposed Accessories: Full-size Sample of each accessory type.

E. Sign Schedule: Use same designations specified or indicated on Drawings or in a sign schedule.

1.4 INFORMATIONAL SUBMITTALS

A. Sample Warranty: For special warranty.

B. Braille Certification: Submit certified letter as to the accuracy of all Braille messages in this graphics program. Certification shall be from a Library of Congress Braille translator, the Lighthouse for the Blind, or other source acceptable to the Owner.

1.5 CLOSEOUT SUBMITTALS

A. Maintenance Data: For signs to include in maintenance manuals.

1. Maintenance Manuals and Instructions: Include written instructions for removal of signs attached to wall surfaces including recommended methods for removal of residual adhesives. Prior to final acceptance date, submit two bound operating and maintenance manuals with operating and maintenance instructions, parts listing, recommended parts inventory listing, purchase source listing, diagnostic and repair information available to manufacturer's and Installer's maintenance personnel, emergency instructions, as-built wiring diagrams and similar information organized behind labeled tabs.

1.6 QUALITY ASSURANCE

A. Installer Qualifications: An entity that employs installers and supervisors who are trained and approved by manufacturer.

1.7 WARRANTY

A. Special Warranty: Manufacturer agrees to repair or replace components of signs that fail in materials or workmanship within specified warranty period.

1. Failures include, but are not limited to, the following:

a. Deterioration of finishes beyond normal weathering.
b. Deterioration of embedded graphic image.
c. Separation or delamination of sheet materials and components.

2. Warranty Period: Three years from date of Substantial Completion.

PART 2 - PRODUCTS

2.1 SIGNS

A. Manufacturers: Subject to compliance with requirements, provide products by one of the following:

1. ACE Sign Systems, Inc.
2. APCO Graphics, Inc.
3. ASI Sign Systems, Inc.
4. Best Sign Systems, Inc.
5. InPro Corporation (IPC).
6. Or equal.

B. Panel Sign: Sign with smooth, uniform surfaces; with message and characters having uniform faces, sharp corners, and precisely formed lines and profiles; and as follows:

1. Solid-Sheet Sign: Aluminum sheet with finish specified as follows:

   a. Thickness: Manufacturer's standard for size of sign.
   b. Etched and Filled Graphics: Sign face etched or routed to receive enamel-paint infill.
   c. Size: 7 inches by 9 inches.
   d. Copy: TBD

2. Sign-Panel Perimeter: Finish edges smooth.

   a. Edge Condition: Square cut.
   b. Corner Condition in Elevation: Square.
   c. Acrylic: Diamond polish.
   d. Polycarbonate: Match main surface.

3. Frame: Unframed.
4. Mounting: Double-sided foam tape.
5. Surface Finish and Applied Graphics:

   a. Integral Acrylic Sheet Color: As selected by Architect from full range of industry colors.
   b. Painted Finish and Graphics: Manufacturer's standard, factory-applied exterior-grade sign paint, in color as selected by Architect from manufacturer's full range.

6. Text and Typeface: Accessible raised characters and Braille typeface as selected by Architect from manufacturer's full range and variable content as indicated. Finish raised characters to contrast with background color, and finish Braille to match background color.

C. Retain "Flatness Tolerance" Subparagraph below if required, usually for suspended or projection-mounted larger signs; revise to suit Project.

2.2 PANEL-SIGN MATERIALS

A. Acrylic Sheet: ASTM D 4802, category as standard with manufacturer for each sign, Type UVF (UV filtering).

B. Paints and Coatings for Sheet Materials: Inks, dyes, and paints that are recommended by manufacturer for optimum adherence to surface and are UV and water resistant for colors and exposure indicated.

C. Fasteners: Use concealed fasteners fabricated from metals that are not corrosive to the sign material and mounting surfaced.

2.3 ACCESSORIES

A. Fasteners and Anchors: Manufacturer's standard as required for secure anchorage of signage, noncorrosive and compatible with each material joined, and complying with the following:

1. Use concealed fasteners and anchors unless indicated to be exposed.
2. Exposed Metal-Fastener Components, General:

   a. Fabricated from same basic metal and finish of fastened metal unless otherwise indicated.
   b. Fastener Heads: For nonstructural connections, use security fasteners unless otherwise indicated.

3. Inserts: Furnish inserts to be set by other trades into concrete or masonry work.

B. Adhesives: As recommended by sign manufacturer and with a VOC content of 70 g/L or less for adhesives used inside the weatherproofing system and applied on-site when calculated according to 40 CFR 59, Subpart D (EPA Method 24).

2.4 FABRICATION

A. Panel Signs: Comply with Requirements indicated for materials, thicknesses, finishes, colors, designs, shapes, sizes, and details of construction.

B. Graphic Content and Style: Provide sign copy that complies with the requirements indicated for size, style, spacing, content, position, material, finishes, and colors of letters, numbers, and other graphic devices.

C. Raised Copy: Machine cut-copy characters from matte-finished opaque acrylic sheet and chemically weld onto the acrylic sheet forming sign panel face. Produce precisely formed characters with square cut edges free from burrs and cut mark.

1. Panel Material: Matte-finished opaque sheet.
2. Raised Copy Thickness: 3/16 inch.

D. Grade 2 Braille characters to appear in accordance with Accessibility Regulation, with reference to position, size and configuration. Characters to have smooth edges, as opposed to edges that are sharp. Braille location: left justify under room numbers and other text.

2.5 GENERAL FINISH REQUIREMENTS

A. Protect mechanical finishes on exposed surfaces from damage by applying a strippable, temporary protective covering before shipping.

B. Appearance of Finished Work: Noticeable variations in same piece are not acceptable. Variations in appearance of adjoining components are acceptable if they are within the range of approved Samples and are assembled or installed to minimize contrast.

C. Directional Finishes: Run grain with long dimension of each piece and perpendicular to long dimension of finished trim or border surface unless otherwise indicated.

D. Organic, Anodic, and Chemically Produced Finishes: Apply to formed metal after fabrication but before applying contrasting polished finishes on raised features unless otherwise indicated.

PART 3 - EXECUTION

3.1 EXAMINATION

A. Examine substrates, areas, and conditions, with Installer present, for compliance with requirements for installation tolerances and other conditions affecting performance of signage work.

B. Verify that sign-support surfaces are within tolerances to accommodate signs without gaps or irregularities between backs of signs and support surfaces unless otherwise indicated.

C. Verify that anchor inserts are correctly sized and located to accommodate signs.

D. Verify that electrical service is correctly sized and located to accommodate signs.

E. Proceed with installation only after unsatisfactory conditions have been corrected.

3.2 INSTALLATION

A. General: Install signs using mounting methods indicated and according to manufacturer's written instructions.

1. Install signs level, plumb, true to line, and at locations and heights indicated, with sign surfaces free of distortion and other defects in appearance.
2. Install signs so they do not protrude or obstruct according to the accessibility standard.
3. Before installation, verify that sign surfaces are clean and free of materials or debris that would impair installation.

B. Room-Identification Signs and Other Accessible Signage: Install in locations on walls according to accessibility standard requirements.

C. Mounting Methods:

1. Two-Face Tape: Clean bond-breaking materials from substrate surface and remove loose debris. Apply tape strips symmetrically to back of sign of suitable quantity to support weight of sign without slippage. Keep strips away from edges to prevent visibility at sign edges. Place sign in position and push to engage tape adhesive.

D. Signs Mounted on Glass: Provide opaque sheet matching sign material and finish onto opposite side of glass to conceal back of sign.

3.3 SIGNAGE SCHEDULE

ROOM #	**ROOM NAME**
100	PUBLIC
101	EVIDENCE – GENERAL
102	WEAPONS
103	NARCOTICS
104	DECONTAMINATION
105	BAG AND TAG
106	OFFICE
107	JANITOR
108	BAY 1
109	BAY 2
110	STORAGE
111	IT/SECURITY
112	MECHANICAL/ELECTRICAL
113	WATER/FIRE PROTECTION
114	DRYING

3.4 ADJUSTING AND CLEANING

A. Remove and replace damaged or deformed signs and signs that do not comply with specified requirements. Replace signs with damaged or deteriorated finishes or components that cannot be successfully repaired by finish touchup or similar minor repair procedures.

B. Remove temporary protective coverings and strippable films as signs are installed.

C. On completion of installation, clean exposed surfaces of signs according to manufacturer's written instructions and touch up minor nicks and abrasions in finish. Maintain signs in a clean condition during construction and protect from damage until acceptance by Owner.

END OF SECTION 101423

SECTION 102113.13 - METAL TOILET COMPARTMENTS

PART 1 - GENERAL

1.1 SUMMARY

A. Section Includes:

1. Metal toilet compartments.

B. Related Requirements:
1. Section 092216 "Non-Structural Metal Framing" for blocking.
2. Section 102800 "Toilet, Bath, and Laundry Accessories" for accessories mounted on toilet compartments.

1.2 COORDINATION

A. Coordinate requirements for overhead supports, blocking, reinforcing, and other supports concealed within wall to ensure that toilet compartments can be supported and installed as indicated.

1.3 ACTION SUBMITTALS

A. Product Data:

1. Metal toilet compartments.

a. Include construction details, material descriptions, dimensions of individual components and profiles, and finishes for toilet compartments.

B. Shop Drawings:

1. Include plans, elevations, sections, and attachment details.
2. Show locations of cutouts for compartment-mounted toilet accessories.
3. Show locations of centerlines of toilet fixtures.
4. Show locations of floor drains.
5. Show overhead support or bracing locations.

C. Samples for Initial Selection: Manufacturer's standard color sheets, showing full range of available colors for each type of toilet compartment.

1. Include Samples of hardware and accessories involving material and color selection.

D. Samples for Verification: Actual sample of finished product for each type of toilet compartment, hardware, and accessory.

1. Size: Manufacturers' standard size.

1.4 CLOSEOUT SUBMITTALS

A. Operation and Maintenance Data: For toilet compartments.

1.5 MAINTENANCE MATERIAL SUBMITTALS

A. Extra Stock Material: Furnish extra materials to Owner that match products installed and that are packaged with protective covering for storage and identified with labels describing contents.

1. Door Hinges: One hinge(s) with associated fasteners.
2. Latch and Keeper: One latch(es) and keeper(s) with associated fasteners.
3. Door Bumper: One door bumper(s) with associated fasteners.
4. Door Pull: One door pull(s) with associated fasteners.
5. Fasteners: 10 fasteners of each size and type.

1.6 FIELD CONDITIONS

A. Field Measurements: Verify actual locations of toilet fixtures, walls, columns, ceilings, and other construction contiguous with toilet compartments by field measurements, and coordinate before fabrication.

PART 2 - PRODUCTS

2.1 SOURCE LIMITATIONS

A. Obtain metal toilet compartments from single source from single manufacturer.

2.2 PERFORMANCE REQUIREMENTS

A. Surface-Burning Characteristics: Comply with ASTM E84; testing by a qualified testing agency. Identify products with appropriate markings of applicable testing agency.

1. Flame-Spread Index: 25 or less.
2. Smoke-Developed Index: 450 or less.

B. Regulatory Requirements: Comply with applicable provisions in the USDOJ's "2010 ADA Standards for Accessible Design" and ICC A117.1 for toilet compartments designated as accessible.

2.3 METAL TOILET COMPARTMENTS

A. Manufacturers: Subject to compliance with requirements, provide products by one of the following:

1. ASI Accurate Partitions.
2. ASI Global Partitions.
3. Bradley Corporation.
4. General Partitions Mfg. Corp.
5. Hadrian Inc.; Zurn Industries, LLC.

B. Toilet-Enclosure Style: Overhead braced.

C. Urinal-Screen Style: Wall hung, flat panel.

D. Door, Panel, and Pilaster Construction: Seamless, metal facing sheets pressure laminated to core material; with continuous, interlocking molding strip or lapped-and-formed edge closures; corners secured by welding or clips and exposed welds ground smooth. Exposed surfaces shall be free of pitting, seam marks, roller marks, stains, discolorations, telegraphing of core material, or other imperfections.

1. Core Material: Manufacturer's standard sound-deadening honeycomb of resin-impregnated kraft paper in thickness required to provide finished thickness of 1 inch (25 mm) for doors and panels and 1-1/4 inches (32 mm) for pilasters.
2. Tapping Reinforcement: Provide concealed reinforcement for tapping (threading) at locations where machine screws are used for attaching items to units.

E. Urinal-Screen Construction:

1. Flat-Panel Urinal Screen: Matching panel construction.

F. Facing Sheets and Closures: Electrolytically coated steel sheet with nominal base-metal (uncoated) thicknesses as follows:

1. Pilasters, Braced at Both Ends: Manufacturer's standard thickness, but not less than 0.036 inch (0.91 mm).
2. Pilasters, Unbraced at One End: Manufacturer's standard thickness, but not less than 0.048 inch (1.21 mm).
3. Panels: Manufacturer's standard thickness, but not less than 0.030 inch (0.76 mm).
4. Doors: Manufacturer's standard thickness, but not less than 0.030 inch (0.76 mm).
5. Flat-Panel Urinal Screens: Thickness matching panels.

G. Pilaster Shoes: Formed from stainless steel sheet, not less than 0.031-inch (0.79-mm) nominal thickness and 3 inches (76 mm) high, finished to match hardware.

H. Pilaster Sleeves (Caps): Formed from stainless steel sheet, not less than 0.031-inch (0.79-mm) nominal thickness and 3 inches (76 mm) high, finished to match hardware.

I. Brackets (Fittings):

1. Full-Height (Continuous) Type: Manufacturer's standard design; stainless steel.

J. Steel Sheet Finish: Immediately after cleaning and pretreating, apply manufacturer's standard baked-on finish, including thermosetting, electrostatically applied, and powder coatings. Apply one color in each room.

1. Color: As selected by Architect from manufacturer's full range.

2.4 HARDWARE AND ACCESSORIES

A. Door Hardware and Accessories: Heavy Duty: Manufacturer's heavy-duty institutional operating hardware and accessories.

1. Hinges:

a. Manufacturer's gravity-actuated, cam-action, self-closing type that can be adjusted to hold doors open at any angle up to 90 degrees, allowing emergency access by lifting door.

1) Material, Gravity-Type Hinge: Stainless steel.

2. Latch and Keeper: Manufacturer's surface-mounted latch unit designed for emergency access and with combination rubber-faced door strike and keeper. Provide units that comply with regulatory requirements for accessibility at toilet enclosures designated as accessible.

a. Material: Stainless steel.

3. Coat Hook: Manufacturer's combination hook and rubber-tipped bumper, sized to prevent inswinging door from hitting compartment-mounted accessories.

a. Material: Stainless steel.

4. Door Bumper: Manufacturer's rubber-tipped bumper at outswinging doors.

a. Material: Manufacturer's standard.

5. Door Pull: Manufacturer's unit at outswinging doors that complies with regulatory requirements for accessibility. Provide units on both sides of doors at toilet enclosures designated as accessible.

a. Material: Stainless steel.

B. Overhead Bracing: Manufacturer's standard continuous, extruded-aluminum head rail with antigrip profile and in manufacturer's standard finish.

C. Anchorages and Fasteners: Manufacturer's standard exposed fasteners of stainless steel, finished to match items they are securing, with theft-resistant-type heads. Provide sex-type bolts for through-bolt applications. For concealed anchors, use stainless steel, hot-dip galvanized steel, or other rust-resistant, protective-coated steel compatible with related materials.

2.5 MATERIALS

A. Aluminum Extrusions: ASTM B221 (ASTM B221M).

B. Steel Sheet: Commercial steel sheet for exposed applications; mill phosphatized and selected for smoothness.

1. Electrolytically Zinc Coated: ASTM A879/A879M, 01Z (03G).

C. Stainless Steel Sheet: ASTM A240/A240M or ASTM A666, Type 304, stretcher-leveled standard of flatness.

D. Stainless Steel Castings: ASTM A743/A743M.

2.6 FABRICATION

A. Fabricate toilet compartment components to sizes indicated. Coordinate requirements and provide cutouts for through-partition toilet accessories, and solid blocking within panel where required for attachment of toilet accessories.

B. Overhead-Braced Units: Manufacturer's standard corrosion-resistant supports, leveling mechanism, and anchors at pilasters and walls to suit floor and wall conditions. Provide shoes at pilasters to conceal supports and leveling mechanism.

C. Door Size and Swings: Unless otherwise indicated, provide 24-inch- (610-mm-) wide, inswinging doors for standard toilet enclosures and 36-inch- (914-mm-) wide, outswinging doors with a minimum 32-inch- (813-mm-) wide, clear opening for toilet enclosures designated as accessible.

PART 3 - EXECUTION

3.1 EXAMINATION

A. Examine substrates, areas and conditions, with Installer present, for compliance with requirements for fastening, support, alignment, operating clearances, and other conditions affecting performance of the Work.

1. Confirm location and adequacy of blocking and supports required for installation.

B. Proceed with installation only after unsatisfactory conditions have been corrected.

3.2 INSTALLATION

A. General: Comply with manufacturer's written installation instructions. Install units rigid, straight, level, and plumb. Secure units in position indicated with manufacturer's recommended anchoring devices.

1. Maximum Clearances:

   a. Pilasters and Panels or Screens: 1/2 inch (13 mm).
   b. Panels or Screens and Walls: 1 inch (25 mm).

2. Full-Height (Continuous) Brackets: Secure panels or screens to walls and to pilasters with full-height brackets.

   a. Locate bracket fasteners so holes for wall anchors occur in masonry or tile joints.
   b. Align brackets at pilasters with brackets at walls.

B. Overhead-Braced Units: Secure pilasters to floor and level, plumb, and tighten. Set pilasters with anchors penetrating not less than 1-3/4 inches (44 mm) into structural floor unless otherwise indicated in manufacturer's written instructions. Secure continuous head rail to each pilaster with no fewer than two fasteners. Hang doors to align tops of doors with tops of panels, and adjust so tops of doors are parallel with overhead brace when doors are in closed position.

C. Urinal Screens: Attach with anchoring devices to suit supporting structure. Set units level and plumb, rigid, and secured to resist lateral impact.

3.3 ADJUSTING

A. Hardware Adjustment: Adjust and lubricate hardware in accordance with hardware manufacturer's written instructions for proper operation. Set hinges on inswinging doors to hold doors open approximately 30 degrees from closed position when unlatched. Set hinges on outswinging doors to return doors to fully closed position.

END OF SECTION 102113.13

SECTION 102600 - WALL AND DOOR PROTECTION

PART 1 - GENERAL

1.1 RELATED DOCUMENTS

A. Drawings and general provisions of the Contract, including General and Supplementary Conditions and Division 01 Specification Sections, apply to this Section.

1.2 SUMMARY

A. Section Includes:
   1. Corner guards.

1.3 ACTION SUBMITTALS

A. Product Data: For each type of product.

   1. Include construction details, material descriptions, impact strength, dimensions of individual components and profiles, and finishes.

   2. Include warranty.

B. Samples for Initial Selection: For each type of impact-resistant wall-protection unit indicated, in each color and texture specified.

1.4 INFORMATIONAL SUBMITTALS

1.5 CLOSEOUT SUBMITTALS

A. Maintenance Data: For each type of wall and door protection product to include in maintenance manuals.

   1. Include recommended methods and frequency of maintenance for maintaining best condition of plastic covers under anticipated traffic and use conditions. Include precautions against using cleaning materials and methods that may be detrimental to finishes and performance.

1.6 MAINTENANCE MATERIAL SUBMITTALS

A. Furnish extra materials from the same product run, that match products installed and that are packaged with protective covering for storage and identified with labels describing contents.

1. Corner-Guard Covers: Full-size plastic covers of maximum length equal to 2 percent of each type, color, and texture of cover installed, but no fewer than two, 48-inch- (1200-mm-) long units.

1.7 DELIVERY, STORAGE, AND HANDLING

A. Store wall and door protection in original undamaged packages and containers inside well-ventilated area protected from weather, moisture, soiling, extreme temperatures, and humidity.

1. Maintain room temperature within storage area at not less than 70 deg F (21 deg C) during the period plastic materials are stored.
2. Keep plastic materials out of direct sunlight.
3. Acclimate plastic wall protection components for a minimum of 24 hours.

a. Store corner-guard covers in a vertical position.

1.8 WARRANTY

1. Failures include, but are not limited to, the following:

a. Structural failures including detachment of components from each other or from the substrates, delamination, and permanent deformation beyond normal use.
b. Deterioration of plastics and other materials beyond normal use.

2. Warranty: Limited Lifetime warranty against material and manufacturing defects.

PART 2 - PRODUCTS

2.1 PERFORMANCE REQUIREMENTS

A. Surface Burning Characteristics: Comply with ASTM E84 or UL 723; testing by a qualified testing agency. Identify products with appropriate markings of applicable testing agency.

1. Flame-Spread Index: 25 or less.
2. Smoke-Developed Index: 450 or less.

2.2 CORNER GUARDS

A. Surface-Mounted, Metal Corner Guards: Fabricated as one piece from formed or extruded metal with formed edges; with 90- or 135-degree turn to match wall condition.

1. <Double click here to find, evaluate, and insert list of manufacturers and products.>

Retain one of three "Material" subparagraphs below; stainless-steel sheet is most common. See Section 055000 "Metal Fabrications" for steel angle corner guards.

2. Material: Extruded aluminum, minimum 0.0625 inch (1.6 mm) thick, with clear anodic finish.
3. Wing Size: Nominal 3-1/2 by 3-1/2 inches (90 by 90 mm).
4. Corner Radius: 1/8 inch (3 mm).
5. Mounting: Adhesive.

2.3 MATERIALS

A. Adhesive: As recommended by protection product manufacturer.

2.4 FABRICATION

A. Fabricate wall and door protection according to requirements indicated for design, performance, dimensions, and member sizes, including thicknesses of components.

B. Factory Assembly: Assemble components in factory to greatest extent possible to minimize field assembly. Disassemble only as necessary for shipping and handling.

C. Quality: Fabricate components with uniformly tight seams and joints and with exposed edges rolled. Provide surfaces free of wrinkles, chips, dents, uneven coloration, and other imperfections. Fabricate members and fittings to produce flush, smooth, and rigid hairline joints.

2.5 FINISHES

A. Protect finishes on exposed surfaces from damage by applying a strippable, temporary protective covering before shipping.

B. Appearance of Finished Work: Noticeable variations in same piece are not acceptable. Variations in appearance of adjoining components are acceptable if they are within the range of approved Samples and are assembled or installed to minimize contrast.

PART 3 - EXECUTION

3.1 EXAMINATION

A. Examine substrates and wall areas, with Installer present, for compliance with requirements for installation tolerances and other conditions affecting performance of the Work.

B. Examine walls to which wall protection will be attached for blocking, grounds, and other solid backing that have been installed in the locations required for secure attachment of support fasteners.

1. For wall protection attached with adhesive, verify compatibility with and suitability of substrates, including compatibility with existing finishes or primers.

C. Proceed with installation only after unsatisfactory conditions have been corrected.

3.2 PREPARATION

A. Complete finishing operations, including painting, before installing wall protection.

B. Before installation, clean substrate to remove dust, debris, and loose particles.

3.3 INSTALLATION

A. Installation Quality: Install wall protection according to manufacturer's written instructions, level, plumb, and true to line without distortions. Do not use materials with chips, cracks, voids, stains, or other defects that might be visible in the finished Work.

B. Mounting Heights: Install wall protection at locations indicated on drawings.
   1. Corner Guards: Install corner guards starting above resilient base.

3.4 CLEANING

A. Immediately after completion of installation, clean plastic covers using a standard ammonia-based household cleaning agent.

B. Remove excess adhesive using methods and materials recommended in writing by manufacturer.

END OF SECTION 102600

SECTION 102800 - TOILET, BATH, AND LAUNDRY ACCESSORIES

PART 1 - GENERAL

1.1 SUMMARY

A. Section Includes:

1. Public-use washroom accessories.
2. Warm-air dryers
3. Public-use shower accessories.
4. Underlavatory guards.
5. Custodial accessories.
6. Childcare accessories.

B. Related Requirements:

1. Section 088300 "Mirrors" for frameless mirrors.

1.2 COORDINATION

A. Coordinate accessory locations with other work to prevent interference with clearances required for access by people with disabilities, and for proper installation, adjustment, operation, cleaning, and servicing of accessories.

B. Deliver inserts and anchoring devices set into concrete or masonry as required to prevent delaying the Work.

1.3 ACTION SUBMITTALS

A. Product Data: For each type of product.

1. Include construction details, material descriptions, dimensions of individual components and profiles, and finishes.
2. Include anchoring and mounting requirements, including requirements for cutouts in other work and substrate preparation.

B. Product Schedule: Indicating types, quantities, sizes, and installation locations by room of each accessory required.

1. Identify locations using room designations indicated.
2. Identify accessories using designations indicated.

1.4 INFORMATIONAL SUBMITTALS

A. Sample Warranty: For manufacturer's special warranties.

1.5 CLOSEOUT SUBMITTALS

A. Maintenance Data: For accessories to include in maintenance manuals.

1.6 WARRANTY

A. Manufacturer's Special Warranty for Mirrors: Manufacturer agrees to repair or replace mirrors that fail in materials or workmanship within specified warranty period.

1. Failures include, but are not limited to, visible silver spoilage defects.
2. Warranty Period: 10 years from date of Substantial Completion.

PART 2 - PRODUCTS

2.1 PERFORMANCE REQUIREMENTS

A. Structural Performance: Design accessories and fasteners to comply with the following requirements:

1. Grab Bars: Installed units are able to resist 250 lbf (1112 N) concentrated load applied in any direction and at any point.
2. Shower Seats: Installed units are able to resist 360 lbf applied in any direction and at any point.

2.2 PUBLIC-USE WASHROOM ACCESSORIES

A. Source Limitations: Obtain public-use washroom accessories from single source from single manufacturer.

B. Toilet Tissue (Roll) Dispenser:

1. Products: Subject to compliance with requirements, provide the following:

a. American Specialties, Inc.;
b. Bobrick Washroom Equipment, Inc., B-2888
c. Bradley Corporation;

2. Description: Roll-in-reserve dispenser with hinged front secured with tumbler lockset
3. Mounting: Surface mounted.
4. Material: Stainless steel, No. 4 finish (satin).
5. Capacity: 4 ½ inch or 5 inch diameter rolls.

C. Soap Dispenser:

1. Basis-of-Design Product: Subject to compliance with requirements, provide Bobrick Washroom Equipment, Inc; B-823 or a comparable product by one of the following:

   a. American Specialties, Inc. (ASI).
   b. Bradley Corporation.

2. Description: Designed for manual operation and dispensing soap in lather form.
3. Mounting: Counter mounted.
4. Capacity: 34 oz (1.0L).
5. Materials: Bright polished, ABS plastic.
6. Lockset: Tumbler type.
7. Refill Indicator: Window type.

D. Soap Dispenser (Showers):

1. Basis-of-Design Product: Subject to compliance with requirements, provide Bobrick Washroom Equipment, Inc; B-5050 or a comparable product by one of the following:

   a. American Specialties, Inc. (ASI).
   b. Bradley Corporation.

2. Description: Designed for manual operation and dispensing soap in liquid or lotion form.
3. Mounting: Vertically oriented, surface mounted.
4. Capacity: 48 oz. minimum
5. Materials: ABS plastic.

E. Grab Bar:

1. Basis-of-Design Product: Subject to compliance with requirements, provide Bobrick Washroom Equipment, Inc; B-6806 or a comparable product by one of the following:

   a. American Specialties, Inc. (ASI).
   b. Bradley Corporation.

2. Mounting: Flanges with concealed fasteners.
3. Material: Stainless steel, 0.05 inch (1.3 mm) thick.

   a. Finish: Smooth, ASTM A480/A480M No. 4 finish (satin) on ends and slip-resistant texture in grip area.

4. Outside Diameter: 1-1/2 inches (38 mm).
5. Configuration and Length: As indicated on Drawings.

F. Sanitary-Napkin Disposal Unit:

1. Basis-of-Design Product: Subject to compliance with requirements, provide Bobrick Washroom Equipment, Inc; B-270 or a comparable product by one of the following:

   a. American Specialties, Inc. (ASI).
   b. Bradley Corporation.

2. Mounting: Surface mounted.
3. Door or Cover: Self-closing, disposal-opening cover.
4. Receptacle: Removable.
5. Material and Finish: Stainless steel, ASTM A480/A480M No. 4 finish (satin).

G. Mirror Unit:

1. Manufacturers: Subject to compliance with requirements, provide products by one of the following:

   a. American Specialties, Inc.
   b. Bobrick Washroom Equipment, Inc., B-165
   c. Bradley Corporation.; 781

2. Frame: Stainless-steel channel.

   a. Corners: Manufacturer's standard.

3. Hangers: Produce rigid, tamper- and theft-resistant installation, using method indicated below.

   a. One-piece, galvanized-steel, wall-hanger device with spring-action locking mechanism to hold mirror unit in position with no exposed screws or bolts.
   b. Wall bracket of galvanized steel, equipped with concealed locking devices requiring a special tool to remove.

4. Size: As indicated on Drawings.

H. Seat-Cover Dispenser:

1. Manufacturers: Subject to compliance with requirements, provide products by one of the following:

   a. American Specialties, Inc.
   b. Bobrick Washroom Equipment, Inc., B-221
   c. Bradley Corporation.; 5831.

2.
3. Mounting: Surface mounted.
4. Minimum Capacity: 250 seat covers.
5. Exposed Material and Finish: Stainless steel, ASTM A480/A480M No. 4 finish (satin).
6. Lockset: Tumbler type.

2.3 WARM-AIR DRYERS

A. Source Limitations: Obtain warm-air dryers from single source from single manufacturer.

B. Warm-Air Dryer:

1. Products: Subject to compliance with requirements, provide one of the following:
   a. American Specialties, Inc; TURBO-Pro #0196-93.
   b. Excel Dryer Inc.; ThinAir.
   c. World Dryer Corporation; SLIMdri.

2. Description: Standard-speed, warm-air hand dryer, ADA compliant
3. Mounting: Surface mounted.
4. Operation: Electronic-sensor activated with timed power cut-off switch.
5. Cover Material and Finish: Stainless steel, No. 4 finish (satin).
6. Electrical Requirements: 115 V, 20 A max, 2300 W.

2.4 PUBLIC-USE SHOWER ROOM ACCESSORIES

A. Source Limitations: Obtain public-use shower room accessories from single source from single manufacturer.

B. Shower Curtain Rod:

1. Products: Subject to compliance with requirements, provide one of the following:

   a. American Specialties, Inc;.
   b. Bobrick Washroom Equipment, Inc; B-207, length as required.
   c. Bradley Corporation; 9538.
   d. GAMCO Specialty Accessories; a division of Bobrick;.

2. Description: 1-inch outside diameter, straight rod.
3. Configuration: As indicated on Drawings
4. Mounting Flanges: Concealed fasteners; in material and finish matching rod.
5. Rod Material and Finish: Stainless steel, ASTM A480/A480M No. 4 finish (satin).

C. Shower Curtain:

1. Basis-of-Design Product: Subject to compliance with requirements, provide Bobrick Washroom Equipment, Inc; 204-3 or a comparable product by one of the following:

   a. American Specialties, Inc. (ASI).
   b. Bradley Corporation.
2. Size: Minimum 12 inches (305 mm) wider than opening by 72 inches (1829 mm) high.
3. Material: Vinyl, minimum 0.008 inch (0.2 mm) thick, opaque, matte.
4. Color: As selected from manufacturer's full range.
5. Grommets: Corrosion resistant at minimum 6 inches (152 mm) o.c. through top hem.

6. Shower Curtain Hooks: Chrome-plated or stainless steel, spring wire curtain hooks with snap fasteners, sized to accommodate specified curtain rod. Provide one hook per curtain grommet.

D. Folding Shower Seat:

1. Basis-of-Design Product: Subject to compliance with requirements, provide Bobrick Washroom Equipment, Inc; B-5193 or a comparable product by one of the following:

   a. American Specialties, Inc. (ASI).
   b. Bradley Corporation. 9562

2. Configuration: Rectangular shaped seat., min 25" long.
3. Seat: Phenolic or polymeric composite of slat-type or one-piece construction in color as selected by Architect.
4. Mounting Mechanism: Stainless steel, ASTM A480/A480M No. 4 finish (satin).

E. Robe Hook:

1. Products: Subject to compliance with requirements, provide one of the following:

   a. American Specialties, Inc;.
   b. Bobrick Washroom Equipment, Inc; B-76727.
   c. Bradley Corporation;.
   d. GAMCO Specialty Accessories; a division of Bobrick;.

2. Description: Double-prong unit.

3. Material and Finish: Stainless steel, No. 4 finish (satin).

2.5 CUSTODIAL ACCESSORIES

A. Source Limitations: Obtain custodial accessories from single source from single manufacturer.

B. Custodial Mop and Broom Holder:

1. Basis-of-Design Product: Subject to compliance with requirements, provide Bobrick Washroom Equipment, Inc; B-224 or a comparable product by one of the following:

   a. American Specialties, Inc. (ASI).
   b. Bradley Corporation.

2. Description: Unit with shelf, hooks, holders, and rod suspended beneath shelf.
3. Length: 36 inches (914 mm).
4. Hooks: Four.
5. Mop/Broom Holders: Three, spring-loaded, rubber hat, cam type.
6. Material and Finish: Stainless steel, ASTM A480/A480M No. 4 finish (satin).

   a. Shelf: Not less than nominal 0.05-inch- (1.3-mm-) thick stainless steel.

b. Rod: Approximately 1/4-inch- (6-mm-) diameter stainless steel.

2.6 CHILDCARE ACCESSORIES

A. Source Limitations: Obtain childcare accessories from single source from single manufacturer.

B. Diaper-Changing Station:

1. Basis-of-Design Product: Subject to compliance with requirements, provide Koala Kare; KB-300-SS or a comparable product by one of the following:

   a. American Specialties, Inc. (ASI).
   b. Bradley Corporation.
   c. Bobrick Washroom Equipment.

2. Description: Horizontal unit that opens by folding down from stored position and with child-protection strap.

   a. Engineered to support minimum of 250-lb (113-kg) static load when opened.

3. Mounting: Surface mounted, with unit projecting not more than 4 inches (102 mm) from wall when closed.
4. Operation: By pneumatic shock-absorbing mechanism.
5. Material and Finish: Stainless steel, ASTM A480/A480M No. 4 finish (satin), exterior shell with rounded plastic corners; HDPE interior in manufacturer's standard color.
6. Liner Dispenser: Provide built-in dispenser for disposable sanitary liners.

2.7 MATERIALS

A. Stainless Steel: ASTM A240/A240M or ASTM A666, Type 304, 0.031-inch- (0.8-mm-) minimum nominal thickness unless otherwise indicated.

B. Brass: ASTM B19, flat products; ASTM B16/B16M, rods, shapes, forgings, and flat products with finished edges; or ASTM B30, castings.

C. Fasteners: Screws, bolts, and other devices of same material as accessory unit, unless otherwise recommended by manufacturer or specified in this Section, and tamper and theft resistant where exposed, and of stainless or galvanized steel where concealed.

D. Chrome Plating: ASTM B456, Service Condition Number SC 2 (moderate service).

E. Mirrors: ASTM C1503, Mirror Glazing Quality, clear-glass mirrors, nominal 6.0 mm thick.

2.8 FABRICATION

A. General: Fabricate units with tight seams and joints, and exposed edges rolled. Hang doors and access panels with full-length, continuous hinges. Equip units for concealed anchorage and with corrosion-resistant backing plates.

B. Keys: Provide universal keys for internal access to accessories for servicing and resupplying. Provide minimum of six keys to Owner's representative.

PART 3 - EXECUTION

3.1 INSTALLATION

A. Install accessories in accordance with manufacturers' written instructions, using fasteners appropriate to substrate indicated and recommended by unit manufacturer. Install units level, plumb, and firmly anchored in locations and at heights indicated.

1. Remove temporary labels and protective coatings.

B. Grab Bars: Install to comply with specified structural-performance requirements.

C. Shower Seats: Install to comply with specified structural-performance requirements.

3.2 ADJUSTING AND CLEANING

A. Adjust accessories for unencumbered, smooth operation. Replace damaged or defective items.

B. Clean and polish exposed surfaces in accordance with manufacturer's written instructions.

END OF SECTION 102800

SECTION 104413 - FIRE EXTINGUISHER CABINETS

PART 1 - GENERAL

1.1 RELATED DOCUMENTS

A. Drawings and general provisions of the Contract, including General and Supplementary Conditions and Division 01 Specification Sections, apply to this Section.

1.2 SUMMARY

A. Section Includes:

1. Fire protection cabinets for the following:

a. Portable fire extinguishers.

B. Related Requirements:

1. Section 104416 "Fire Extinguishers" for portable, hand-carried fire extinguishers accommodated by fire-protection cabinets.

1.3 ACTION SUBMITTALS

A. Product Data: For each type of product indicated. Include construction details, material descriptions, dimensions of individual components and profiles, and finishes for fire protection cabinets.

1. Fire Protection Cabinets: Include roughing-in dimensions, details showing mounting methods, relationships of box and trim to surrounding construction, door hardware, cabinet type, trim style, and panel style.

B. Shop Drawings: For fire protection cabinets. Include plans, elevations, sections, details, and attachments to other work.

C. Samples for Initial Selection: For each type of fire protection cabinet indicated.

1.4 QUALITY ASSURANCE

A. Fire-Rated, Fire Protection Cabinets: Listed and labeled to comply with requirements in ASTM E 814 for fire-resistance rating of walls where they are installed.

B. Electrical Components, Devices, and Accessories: Listed and labeled as defined in NFPA 70, by a qualified testing agency, and marked for intended location and application.

1.5 COORDINATION

A. Coordinate size of fire protection cabinets to ensure that type and capacity of fire extinguishers indicated are accommodated.

B. Coordinate sizes and locations of fire protection cabinets with wall depths.

1.6 SEQUENCING

A. Apply vinyl lettering on field-painted, fire protection cabinets after painting is complete.

PART 2 - PRODUCTS

2.1 MATERIALS

A. Aluminum: Alloy and temper recommended by aluminum producer and manufacturer for type of use and finish indicated, and as follows:

1. Sheet: ASTM B 209.

2.2 FIRE PROTECTION CABINET - SEMI RECESSED:

A. Cabinet Type: Suitable for fire extinguisher.

1. Products: Subject to compliance with requirements, provide one of the following:

a. J. L. Industries, Inc., a division of Activar Construction Products Group;
b. Larsen's Manufacturing Company;
c. Potter Roemer Fire Pro;

B. Cabinet Construction:

1. Nonrated
2. 1-hour fire rated.

a. Fire-Rated Cabinets: Construct fire-rated cabinets with double walls fabricated from 0.0428-inch- thick, cold-rolled steel sheet lined with minimum 5/8-inch-thick, fire-barrier material. Provide factory-drilled mounting holes.

C. Cabinet Material: Aluminum sheet.

D. Semirecessed Cabinet: Cabinet box partially recessed in walls of sufficient depth to suit style of trim indicated; with one-piece combination trim and perimeter door frame overlapping surrounding wall surface with exposed trim face and wall return at outer edge (backbend). Provide where walls are of insufficient depth for recessed cabinets but are of sufficient depth to accommodate semirecessed cabinet installation.
1. Rolled-Edge Trim: 2-1/2-inch backbend depth.

E. Recessed Cabinet:
   1. Exposed Flat Trim: One-piece combination trim and perimeter door frame overlapping surrounding wall surface, with exposed trim face and wall return at outer edge (backbend).

F. Cabinet Trim Material: Aluminum sheet.

G. Door Material: Aluminum sheet.

H. Door Style: Vertical duo panel with frame.

I. Door Glazing: Tempered float glass (clear).

J. Door Hardware: Manufacturer's standard door-operating hardware of proper type for cabinet type, trim style, and door material and style indicated.

   1. Provide projecting door pull and friction latch.
   2. Provide continuous hinge, of same material and finish as trim, permitting door to open 180 degrees.

K. Accessories:

   1. Identification: Lettering complying with authorities having jurisdiction for letter style, size, spacing, and location. Locate as directed by Architect.

      a. Identify fire extinguisher in fire protection cabinet with the words "FIRE EXTINGUISHER."

         1) Location: Applied to cabinet glazing.
         2) Application Process: Silk-screened.
         3) Lettering Color: Red.
         4) Orientation: Vertical.

L. Materials:

   1. Aluminum: ASTM B221 for extruded shapes and aluminum sheet, with strength and durability characteristics of not less than Alloy 6063-T5 for aluminum sheet.

      a. Finish: Clear anodic.

2.3 FABRICATION

A. Fire Protection Cabinets: Provide manufacturer's standard box (tub) with trim, frame, door, and hardware to suit cabinet type, trim style, and door style indicated.

   1. Weld joints and grind smooth.
   2. Provide factory-drilled mounting holes.

B. Cabinet Doors: Fabricate doors according to manufacturer's standards, from materials indicated and coordinated with cabinet types and trim styles selected.

1. Fabricate door frames with tubular stiles and rails and hollow-metal design, minimum 1/2 inch thick.
2. Miter and weld perimeter door frames.

C. Cabinet Trim: Fabricate cabinet trim in one piece with corners mitered, welded, and ground smooth.

2.4 GENERAL FINISH REQUIREMENTS

A. Comply with NAAMM's "Metal Finishes Manual for Architectural and Metal Products" for recommendations for applying and designating finishes.

B. Protect mechanical finishes on exposed surfaces of fire protection cabinets from damage by applying a strippable, temporary protective covering before shipping.

C. Finish fire protection cabinets after assembly.

D. Appearance of Finished Work: Noticeable variations in same piece are not acceptable. Variations in appearance of adjoining components are acceptable if they are within the range of approved Samples and are assembled or installed to minimize contrast.

PART 3 - EXECUTION

3.1 EXAMINATION

A. Examine walls and partitions for suitable framing depth and blocking where semirecessed cabinets will be installed.

B. Proceed with installation only after unsatisfactory conditions have been corrected.

3.2 PREPARATION

A. Prepare recesses for semirecessed fire protection cabinets as required by type and size of cabinet and trim style.

3.3 INSTALLATION

A. General: Install fire protection cabinets in locations and at mounting heights indicated or, if not indicated, at heights indicated below:

1. Fire Protection Cabinets: 48 inches above finished floor to top of cabinet.

B. Fire Protection Cabinets: Fasten cabinets to structure, square and plumb.

1. Unless otherwise indicated, provide recessed fire protection cabinets. If wall thickness is not adequate for recessed cabinets, provide semirecessed fire protection cabinets.

2. Provide inside latch and lock for break-glass panels.
3. Fasten mounting brackets to inside surface of fire protection cabinets, square and plumb.

C. Identification: Apply silkscreen lettering at locations indicated.

3.4 ADJUSTING AND CLEANING

A. Remove temporary protective coverings and strippable films, if any, as fire protection cabinets are installed unless otherwise indicated in manufacturer's written installation instructions.

B. Adjust fire protection cabinet doors to operate easily without binding. Verify that integral locking devices operate properly.

C. On completion of fire protection cabinet installation, clean interior and exterior surfaces as recommended by manufacturer.

D. Touch up marred finishes, or replace fire protection cabinets that cannot be restored to factory-finished appearance. Use only materials and procedures recommended or furnished by fire protection cabinet and mounting bracket manufacturers.

E. Replace fire protection cabinets that have been damaged or have deteriorated beyond successful repair by finish touchup or similar minor repair procedures.

END OF SECTION 104413

SECTION 104416 - FIRE EXTINGUISHERS

PART 1 - GENERAL

1.1 SUMMARY

A. Section includes portable, hand-carried fire extinguishers, and signage.

B. Related Sections:

1. Division 10 Section "Fire Extinguisher Cabinets."

1.2 SUBMITTALS

A. Product Data: For each type of product indicated. Include rating and classification, material descriptions, dimensions of individual components and profiles, and finishes for fire extinguisher.

B. Operation and Maintenance Data: For fire extinguishers to include in maintenance manuals.

C. Warranty: Sample of special warranty.

1.3 QUALITY ASSURANCE

A. NFPA Compliance: Fabricate and label fire extinguishers to comply with NFPA 10, "Portable Fire Extinguishers."

B. Fire Extinguishers: Listed and labeled for type, rating, and classification by an independent testing agency acceptable to authorities having jurisdiction.

1. Provide fire extinguishers approved, listed, and labeled by FMG.

1.4 COORDINATION

A. Coordinate type and capacity of fire extinguishers with fire protection cabinets to ensure fit and function.

1.5 WARRANTY

A. Special Warranty: Manufacturer's standard form in which manufacturer agrees to repair or replace fire extinguishers that fail in materials or workmanship within specified warranty period.

1. Failures include, but are not limited to, the following:

a. Failure of hydrostatic test according to NFPA 10.
b. Faulty operation of valves or release levers.

2. Warranty Period: Six years from date of Substantial Completion.

PART 2 - PRODUCTS

2.1 PORTABLE, HAND-CARRIED FIRE EXTINGUISHERS

A. Fire Extinguishers: Type, size, and capacity for each location indicated.
1. Portable Hand-Carried Fire Extinguishers:
1) Multipurpose dry-chemical type, 5 lb., 3A 40BC.

B. Accessories:
1. Wall Mounted Sign:
a. Provide and install High Visibility, 3 dimensional, triangle-projection mounted sign above each fire extinguisher cabinet and fire extinguisher.
1) Material: Acrylic.
2) Size: 6 inches high x 9 inches wide x 4 inches deep with 2 mounting holes
3) Wording: “FIRE Extinguisher” with down arrow, or as required by AHJ.
4) Color: Red background with white signage.
5) Installation: Surface mounted, bottom of sign at 72” aff.

2.2 MOUNTING BRACKETS

A. Mounting Brackets: Manufacturer's standard galvanized steel, designed to secure fire extinguisher to wall or structure, of sizes required for types and capacities of fire extinguishers not shown to be installed in a cabinet, with plated or red baked-enamel finish.

B. Identification: Lettering complying with authorities having jurisdiction for letter style, size, spacing, and location. Locate as indicated by Architect.

PART 3 - EXECUTION

3.1 EXAMINATION

A. Examine fire extinguishers for proper charging and tagging.

1. Remove and replace damaged, defective, or undercharged fire extinguishers.

B. Proceed with installation only after unsatisfactory conditions have been corrected.

3.2 INSTALLATION

A. General: Install fire extinguishers in locations indicated and in compliance with requirements of authorities having jurisdiction.

END OF SECTION 104416

SECTION 105113 – GEAR LOCKERS

PART 1 – GENERAL

1.1 SECTION INCLUDES

A. Gear Lockers – Wall Mounted and Tube Frame Mounted
B. Tubular Frame Wall Structure

1.2 RELATED SECTIONS

A. DIV 26 Electrical

1.3 SUBMITTALS

A. Product Data: Submit manufacturer's product data and installation instructions.

B. Shop Drawings: Submit manufacturer's shop drawings for each individual unit of lockers.

C. Delegated-Design Submittal: For Tubular Frame Wall Structure

D. Samples: Submit manufacturer's standard color samples.

E. Owner's Manual: Provide maintenance manual at closeout.

F. Warranty: Submit manufacturer's standard warranty.

1.4 QUALITY ASSURANCE

A. Manufacturer shall have a minimum of five years experience in the direct manufacture of lockers and wall mounting systems.

B. All Gear Locker Products must be manufactured in United States of America.

C. Installer shall have 5 years of experience in locker assembly.

D. Engineering Responsibility: Preparation of Shop Drawings, design calculations, and other structural data by a qualified professional engineer.

E. Structural Engineer Quaolifications: A structural engineer who is legally qualified to practice in the State of Illinois and who is experienced in providing engineering services of the kind indicated. Engineering services are defined as those performed for installations of cold-formed metal framing that are similar to those indicated for this Project in material, design, and extent.

1.5 DELIVERY, STORAGE AND HANDLING

A: Delivery: Deliver materials to site in manufacturer's original, unopened containers with labels identifying product and manufacturer's name.

B: Storage: Store materials in a clean dry area.

C: Handling: Protect materials and finish during installation and handling to prevent damage.

PART 2 - PRODUCTS

2.1 MANUFACTURER

A. GearGrid LLC 670 SW 15th Street, Forest Lake, MN 55025. Toll-free 888-643-6694. Phone 651- 464-4468. Fax 651-464-4780. Web site www.geargrid.com. Email sales@geargrid.com.

B. Request for Substitution will be considered in accordance with provisions of SECTION 012500.

2.2 GEAR LOCKERS – WALL MOUNTED AND TUBE FRAME MOUNTED

A. Model: GEARGRID Wall Mounted Storage System.

B. Locker Sizes: (Please reference project drawings for indicated sizes)

C. Construction: Units shall be welded at all applicable joints. Forming of metal shall be completed by standard cold-forming operations. Use of fasteners will only be required to allow for knock- down shipping, securing units to mounting surface and on applicable accessories.

D. Vertical Dividers:

1. Outer Frames: 1.25” O.D. x 16 gauge wall thickness ASTM A513 steel tubing.

2. Inner Grid: .25” diameter ASTM 510 cold drawn steel wire resistance welded to a 3” square pattern.

3. Inner Grid wires must be full length and width of inside vertical divider frame. Wires not running full length or width, thus creating exposed wire ends will not be acceptable.

4. Inner Grid wires must run horizontally and vertically creating a square or rectangular grid pattern only. Grid wires not creating a square or rectangular grid pattern will not be acceptable.

5. Inner Grid wires shall intersect and cross all perpendicular wires, and shall be welded at all intersections.

E. Back Panel:

1. Required on each locker to protect the locker contents and wall substrate, as well as provide an additional panel for accessory attachment.

2. Grid: .25” diameter ASTM 510 cold drawn steel wire resistance welded to a 3” square pattern.

3. Back panel must engage and be secured to vertical dividers via horizontal wires

which extend into mounting holes pre-drilled in vertical dividers. Back panels are sandwiched between vertical dividers, preventing them from being removed after assembly is complete.

4. Inner Grid wires must be full length and width of inside vertical divider frame. Wires not running full length or width, thus creating exposed wire ends will not be acceptable.

6. Inner Grid wires must run horizontally and vertically creating a square or rectangular grid pattern only. Grid wires not creating a square or rectangular grid pattern will not be acceptable.

5. Inner Grid wires shall intersect and cross all perpendicular wires, and shall be welded at all intersections.

F. Shelves: (1) Upper, (1) Lower. .25" diameter ASTM 510 cold drawn steel wire resistance welded and cold formed. Upper shelf shall include an integrated 20 gauge steel bracket to accept a 2" x 16" name placard.

G. Apparel Hooks: (3) per locker opening. .192" diameter ASTM 510 cold drawn steel wire resistance welded, cold formed and powder coated. Apparel hooks must securely engage and snap onto side or back grid, to prevent unintentional disengagement of hook.

2.3 TUBULAR FRAME WALL STRUCTURE

A. Model: Tubular Frame Wall Structure Units

B. Tubular Frame Wall Structures are engineered specifically for each installation and are designed to ship in a knocked-down configuration for efficient shipping. Wall structure components are bolted together with hardware as supplied or identified.

C. Construction: Units shall be welded at all applicable joints. Forming of metal shall be completed by standard cold-forming operations. Use of fasteners will only be required to allow for knock- down shipping, securing units to mounting surface and on applicable accessories.

1. Vertical Posts: 4" x 4", .250" wall thickness ASTM A513 steel tube

2. Floor Mounting Plates: ½" steel plate welded to Vertical Posts. 3/8" mounting holes as needed.

Mounting plate hole configurations subject to locker layout

3. Horizontal Frames: 4" x 4", .1875" wall thickness ASTM A513 steel tube. Frames mechanically fastened to Vertical Posts with supplied or identified hardware.

2.4 FINISH

A. General: All system components excluding assembly and mounting hardware and stainless steel components are to receive the standard finish.

B. Standard Finish: Components to be cleaned using a phosphatized bath, clear water rinse and electro-statically coated with a durable TGIC powder coating.

C. Color: To be selected by Architect.

PART 3 - EXECUTION

3.1 EXAMINATION

A. Examine areas to receive Tubular Frame Wall Structures. Notify architect if areas are not acceptable. Do not begin installation until unacceptable conditions have been corrected.

3.2 INSTALLATION

A. Assemble free-standing lockers in accordance with manufacturer's instructions.

B. Use manufacturer's hardware for assembly.

END OF SECTION 105113

SECTION 105113 – METAL EVIDENCE LOCKERS

PART 1 - GENERAL

1.1 RELATED DOCUMENTS

A. Drawings and general provisions of the Contract, including General and Supplementary Conditions and Division 1 Specification Sections, apply to this Section.

1.2 SUMMARY

A. This Section includes the following:

Standard and Pass-thru Evidence Lockers

B. Related Work, Not Furnished:

Finish floor covering materials and installation.

1.3 REFERENCES

A. American National Standards Institute (ANSI) Standards:

Applicable standards for fasteners used for assembly.

B. American Society for Testing and Materials (ASTM) Standards:

Applicable standards for steel sheet materials used for fabrication.

Applicable standards for the testing of electrostatically applied Powder Coat Paint

C. American Institute Of Steel Construction (AISC) Standards:

Applicable standards for steel materials used for fabrication.

1.4 DESCRIPTION

A. General: Metal Evidence Lockers

B. Finishes:

Fabricated Metal Components and Assemblies: All components to be painted with an electrostatically applied Powder Coat paint that can meet or exceed test requirements set out by ASTM standard D3451-06 Standard Guide for Testing Coating Powders and Powder Coatings.

C. Sizes:

Available in a nominal height of 82 inches (2,083MM)

Available in nominal widths of 36 inches (914MM) as noted on drawings.

Available in a nominal depth of 24 inches (609MM) as noted on drawings.

1.5 PERFORMANCE REQUIREMENTS

A. Design Requirements:

B. Limit overall width to 0.032 inches 0.793MM greater or less than the nominal specified width.

1.6 SUBMITTALS

A. Product Data: Submit manufacturer's product literature and installation instructions for each type of evidence lockers required. Include data substantiating that products to be furnished comply with requirements of the contract documents.

B. Shop Drawings: Show fabrication, assembly, and installation details including descriptions of procedures and diagrams. Show complete extent of evidence lockers installation layout including quantities, locations and types of accessory units required. Include notations and descriptions of all installation items and components.

Show installation details at non-standard conditions, if any.

Provide layout, dimensions, and identification of each unit corresponding to sequence of installation procedures.

Provide installation schedule and procedures to ensure proper installation.

C. Samples: Provide minimum 3 inch (76MM) square example of each color and texture on actual substrate for each component to remain exposed after installation.

D. Selection Samples: For initial selection of colors and textures, submit manufacturer's color charts consisting of actual product pieces, showing full range of colors and textures available.

E. Warranty: Submit draft copy of proposed warranty for review by the Architect.

F. Maintenance Data: provide written documentation of the manufacturer’s statement claiming the maintenance free nature of the product.

1.7 QUALITY ASSURANCE

A. Manufacturer Qualifications: Engage an experienced manufacturer who is ISO 9001 certified for the design, production, installation and service of evidence lockers. Furnish certification attesting ISO 9001 quality system registration.

B. Installer Qualifications: Engage an experienced installer who is a manufacturer's authorized representative for the specified products for installing evidence lockers.

Minimum Qualifications: 1-year experience installing evidence lockers of comparable size and complexity to specified project requirements.

1.8 DELIVERY, STORAGE AND HANDLING

A. Follow manufacturer's instructions and recommendations for delivery, storage and handling requirements.

1.9 PROJECT CONDITIONS

A. Field Measurements: Verify quantities of evidence lockers before fabrication. Indicate verified measurements on Shop Drawings. Coordinate fabrication and delivery to ensure no delay in progress of the Work.

B. Established Dimensions: Where field measurements cannot be made without delaying the Work, establish dimensions and proceed with fabricating evidence lockers units without field measurements. Coordinate construction to ensure actual dimensions correspond to established dimensions.

1.10 WARRANTY

A. Provide a written warranty executed by Contractor, Installer and Manufacturer, agreeing to repair or replace units which fail in materials or workmanship within the established warranty period. This warranty shall be in addition to and not a limitation of other rights the Owner may have under the General Conditions provisions of the Contract Documents.

B. Limited Lifetime Warranty: Subject to the terms in the written warranty, warrant the original purchaser exclusively that the locker frames manufactured by it will be free from defects in materials and workmanship for the lifetime of the locker. Warrant the original purchaser exclusively that all moving parts manufactured by it will be free from defects in materials and workmanship for 5 years.

C. Warrants that all refrigeration units shall be free from defects in materials and workmanship for one (1) year from the date of the customer's written acceptance of installation. During the 1-year warranty period, all parts are included at no cost for 1 year. Labor is included at no cost during the first year of the 1-year warranty period. After the first year of the 1-year warranty, all labor will be charged at the current rate.

PART 2 - PRODUCTS

2.1 MANUFACTURERS

A. Manufacturer: Subject to the Project Requirements, provide product by Spacesaver, or one of the following:

1. Fasco
2. Motus Space Solutions

2.2 BASIC MATERIALS

A. General: Provide materials and quality of workmanship, which meets or exceeds established industry standards for products specified. Use furniture grade sheet metal and fasteners for

component fabrication unless indicated otherwise. Material thicknesses/gauges are manufacturer's option unless indicated otherwise.

2.3 LOCKER TYPES

A. Pass-thru evidence lockers

2.4 MANUFACTURED COMPONENTS, STANDARD EVIDENCE LOCKERS

A. Welded Frame:

1. The welded frame is structural and shall consist of top, bottom, back and sides constructed of a minimum of 18 gage (1.21MM) steel. All frame components shall be joined using resistance welding. Riveting or bolting of structural members will not be permitted.
2. Horizontal and vertical outer front flanges will be a minimum of 1.5 inches (38MM). Horizontal and vertical flanges will overlap with a minimum of 2 resistance welds per corner.
3. Center vertical lock housing is structural and will run the full height and depth of the locker. All locks will be completely enclosed by a full height removable panel. Pass-thru rear release mechanisms will be completely enclosed by the lock housing and accessible only when the rear door is open. Provide engagement points for the anti-pry tabs that are on all front doors.
4. Exposed lock mechanisms that can snag evidence and be obstructed by stored articles will not be permitted.

B. Welded Bases:

1. Each welded base shall be permanently affixed to each locker for lateral unit stability. The base shall be a minimum of 14 gage (1.98MM) steel 4 inches (101MM) high with a 1.5 inch (38MM) return on the bottom for support.
2. Provide four 0.375 inch (9.5MM) mounting holes and four 0.375 inch (9.5MM) nuts welded in place for the mounting of floor levelers. Provide four appliance levelers per locker.
3. Provide removable access panels for access to mounting holes and leveling points.

C. Shelves:

1. Shall be a single-piece formed from a minimum of 18-gage (1.21MM) cold rolled steel with a double 90-degree bend on the rear of the shelf and a double 90-degree bend on the front of the shelf. Shelf sides shall be turned up 90-degrees for ease of cleaning and to prevent debris from becoming caught between the shelf and the sidewall.
2. All shelves shall be welded into place. Rivets, screws, bolts or other loose fasteners will not be permitted for the fastening of shelves to the locker frame.

D. Locks:

1. Lock shall be push button locking with a stainless steel push button and alignment bezel. Locks shall be a one-piece removable design. Locks will secure the door with the single push of a button with no other action required by the user.
2. Pass-thru locks will be reset from the rear of the locker when the rear door is in the open position only.
3. Provide documentation for cycle testing where locks are tested successfully to a minimum 40,000 cycles without failure.
4. Locks shall be pre-lubricated with no maintenance required for the lifetime of the unit (estimated at 20 years).

E. One Piece Welded Doors:

1. Shall be formed from two pieces of minimum 18-gauge (1.2MM) cold rolled steel box formed and welded together using modern GMAW techniques. The one piece door with inner and outer door skins shall have a combined steel thickness of no less than 0.096 inches (2.4MM) thick.
2. Each door shall have a nickel plated, flush mounted door handle installed with fasteners visible only in the unlocked position.
3. Provide neoprene silencers on each door.
4. Provide anti-pry tabs that engage with the Center Vertical Lock Housing when the door is locked.
5. Doors shall have no moving parts except the door and the hinge.
6. Provide stainless steel spring loaded hinges that are welded to prevent pin removal. Spring loaded hinges shall be capable of holding the door closed and flush with the door frame. Doors that hang ajar are a safety concern and will not be tolerated.

F. Rear Doors

1. Shall be formed from two pieces of minimum 18-gauge (1.2MM) cold rolled steel box formed and welded together. The one piece door with inner and outer door skins shall have a combined steel thickness of no less than 0.096 inches (2.4MM) thick.
2. Door Arrangement: As indicated in the Drawings.
3. Each rear door shall have multi-point engagement with a built-in L handle lock. Access to all lock mechanisms shall be hidden behind cover plates that are secured with tamperproof fasteners.

G. ACCESSORIES:

1. Front door lock out system: Provide manufacturer’s standard.

2.5 FABRICATION

A. General: Coordinate fabrication and delivery to ensure no delay in progress of the Work.

2.6 FINISHES

A. Colors: Provide in custom colors as selected by Architect.

B. Paint Finish: Provide factory applied electrostatic powder coat paint. Meet or exceed specifications of the American Society for Testing and Materials (ASTM) standards.

PART 3 - EXECUTION

3.1 EXAMINATION

A. Examine evidence lockers scheduled to receive accessories with Installer present for compliance with requirements for installation tolerances and other conditions affecting performance of specified accessory items.

B. Proceed with accessory installation only after unsatisfactory conditions have been corrected.

3.2 INSTALLATION

A. General: Follow manufacturer's written instructions for installation of each type of accessory item specified.

3.3 FIELD QUALITY CONTROL

A. Verify accessory unit alignment and plumb after installation. Correct if required following manufacturer's instructions.

B. Remove components that are chipped, scratched, or otherwise damaged and which do not match adjoining work. Replace with new matching units, installed as specified and in manner to eliminate evidence of replacement.

3.4 ADJUSTING

A. Adjust all accessories to provide smoothly operating, visually acceptable installation.

3.5 CLEANING

A. Immediately upon completion of installation, clean components and surfaces. Remove surplus materials, rubbish and debris resulting from installation upon completion of work and leave areas of installation in neat, clean condition.

3.6 DEMONSTRATION/TRAINING

A. Schedule and conduct demonstration of installed accessory items and features with Owner's personnel.

B. Schedule and conduct maintenance training with Owner's maintenance personnel. Training session should include lecture and demonstration of all maintenance and repair procedures that end user personnel would normally perform.

3.7 PROTECTION

A. Protect system against damage during remainder of construction period. Advise Owner of additional protection needed to ensure that system will be without damage or deterioration at time of substantial completion.

END OF SECTION 105113.13

SECTION 105626 - MOBILE STORAGE SHELVING

PART 1 - GENERAL

1.1 RELATED DOCUMENTS

A. Drawings and general provisions of the Contract, including General and Supplementary Conditions and Division 01 Specification Sections, apply to this Section.

1.2 SUMMARY

A. Section Includes:

1. Manually operated systems.

1.3 ACTION SUBMITTALS

A. Product Data: For each type of product.

1. Include construction details, material descriptions, dimensions of individual components and profiles, and finishes for mobile shelving systems and accessories.

B. LEED Submittals:

1. Product Data for Credit MR 4: For products having recycled content, documentation indicating percentages by weight of postconsumer and preconsumer recycled content. Include statement indicating cost for each product having recycled content.
2. Product Data for Credit IEQ 4.4: For composite wood products, documentation indicating that product contains no urea formaldehyde.

C. Shop Drawings:

1. Include plans, elevations, sections, and details.
2. Show shelving layout.
3. Show location and extent of rail system including depth required if recessed.
4. Show clear-aisle widths from face of carriages.
5. Detail fabrication and installation of mobile shelving systems including methods of anchoring shelves to carriages and rails to building structure.

D. Samples for Initial Selection: For units with factory-applied finishes, 6 inches (152 mm) in size.

1.4 INFORMATIONAL SUBMITTALS

A. Qualification Data: For Installer.

B. Sample Warranty: For manufacturer's special warranty.

1.5 CLOSEOUT SUBMITTALS

A. Maintenance Data: For mobile shelving systems to include in maintenance manuals.

1.6 WARRANTY

A. Special Warranty: Manufacturer agrees to repair or replace components of mobile shelving systems that fail in materials or workmanship within specified warranty period.

1. Failures include, but are not limited to, the following:

a. Deterioration of metals, metal finishes, and other materials beyond normal wear.

2. Warranty Period: Five years from date of Substantial Completion.

PART 2 - PRODUCTS

2.1 MANUFACTURERS

A. Manufacturers: Subject to compliance with requirements, provide products by one of the following:

1. Ames Color File.
2. Borroughs Corporation.
3. Montel Inc.
4. Spacesaver Corporation.

B. Source Limitations: Obtain mobile storage systems including shelving from single manufacturer.

2.2 PERFORMANCE REQUIREMENTS

A. Structural Performance: Provide mobile shelving systems capable of supporting the following:

1. Load per Linear Foot of Carriage: 1000 lb/ft. (1488 kg/m).

B. Operating Force: For manually operated systems, maximum 1 lbf (4.45 N) required to move 1000 lbs (453 kg).

2.3 SYSTEMS AND COMPONENTS

A. General: Provide manufacturer's standard mobile storage shelving systems and components. Where components are not otherwise indicated, provide manufacturer's standard components as required for a complete system.

B. Recycled Content of Steel: Postconsumer recycled content plus one-half of preconsumer recycled content not less than 25 percent.

C. Inserts: Furnish required concrete inserts and similar anchorage devices for installing track system, and furnish other components of work where installation of devices is specified in another Section.

D. Tracks: Steel rails with tops machined to mate with guide wheels and with ends designed to provide smooth, secure continuity between sections without field welding. Provide mounting brackets, anchorage devices, adjustable leveling devices, and stops at terminations of rails to prevent carriages from running off track ends.

   1. Mounting: Recessed.

E. Carriages: Rigid frames consisting of C-shaped cold-formed steel beams and cross beams, designed to allow secure anchorage of shelving units.

   1. Carriage Width: 2 feet.
   2. Carriage Length: 7 feet.
   3. Wheels: Manufacturer's standard number of bearing-mounted, steel wheels, precision ground to mate with tracks.
   4. Bumpers: Provide two rubber bumpers with minimum depth of 1/2 inch (13 mm) each side.

F. Anti-Tip Brackets: Mount on carriage for engagement with track system to secure units against tipping.

G. Carriage End Panels: Full depth and height of shelving units. Provide at the operating end of each range.

   1. Material: Manufacturer's standard.

2.4 MECHANICALLY OPERATED SYSTEMS

A. Drive Systems: Geared transmission and chain systems with tensioning device to provide mechanical assistance and uniform movement along entire length of each carriage. Permanently shielded and lubricated.

B. Drive Shaft: Continuous tubular or solid steel shaft, capable of transmitting torque from drive system without distortion.

C. Locking Pins: Located on range end panels to allow locking of individual range carriage when depressed.

2.5 STEEL-BRACKET SHELVING

A. Steel-Bracket Shelving: ANSI Z39.73, shelving consisting of two uprights and two spreaders per section forming a four-sided frame, with adjustable shelves on one or both sides of uprights cantilever-hung by brackets. Configure units for mounting on mobile carriages.

B. Shelving Units:

1. Type: Welded, self-supporting units.
2. Configuration: Double-faced units with gusset plates.
3. Width: 42 inches (1067 mm).
4. Height: 66 inches (1676 mm).
5. Shelf Depth: 12 inches (305 mm) nominal.
6. Shelf Styles: Provide the following styles and numbers of adjustable shelves:

   a. Flat with integral backstops; six shelves.

C. Frames:

1. Uprights: Steel channels, 0.060 inch (1.52 mm) thick, with slots to receive shelf bracket tabs at 1 inch (25 mm) o.c.
2. Spreaders: Tube steel, 0.060 inch (1.52 mm) thick.
3. Reinforcing Gusset Plates: Triangular steel plates, 0.060 inch (1.52 mm) thick, with return flange along bottom edge.

D. Adjustable Shelves: 0.048-inch- (1.22-mm-) thick cold-rolled steel sheet. Provide two brackets per shelf; 0.060-inch- (1.52-mm-) thick cold-rolled steel.

E. Base: Manufacturer's standard for attachment to mobile carriages.

F. Shelving Unit End Panels: Provide one at end of each range; cold-rolled steel sheet, 0.048 inch (1.22 mm) thick.

G. Shelving Tops: Provide full length of each range with manufacturer's standard attachment brackets for type of top indicated; cold-rolled steel sheet, 0.048 inch (1.22 mm) thick.

2.6 STEEL FINISHES

A. Appearance of Finished Work: Noticeable variations in same piece are not acceptable. Variations in appearance of adjoining components are acceptable if they are within the range of approved Samples and are assembled or installed to minimize contrast.

B. Baked-Enamel or Powder-Coat Finish: Manufacturer's standard two-coat, baked-on finish consisting of prime coat and thermosetting topcoat to achieve a minimum dry film thickness of 2 mils (0.05 mm).

1. Color and Gloss: As selected by Architect from manufacturer's full range.

2.7 SYSTEM ACCESSORIES

A. Floor Lock: Key-operated floor lock capable of securing entire system. Provide two keys.

PART 3 - EXECUTION

3.1 EXAMINATION

A. Examine areas, with Installer present, for compliance with requirements for installation tolerances, location of framing and reinforcements, and other conditions affecting performance of mobile shelving systems.

B. Proceed with installation only after unsatisfactory conditions have been corrected.

3.2 INSTALLATION

A. Level and plumb tracks to a tolerance of 0.09 inch in 120 inches (2.4 mm in 3048 mm) with no more than 0.06-inch (1.5-mm) variation between adjacent rails. Use permanent shims or non-shrink grout as indicated by manufacturer.

B. Surface-Mounted Track Systems: Install underlayment, ramps, and finish flooring according to manufacturer's written instructions and flush with track surfaces. Do not extend ramps beyond ends of carriages.

C. Recessed Track Systems: Solidly fill gaps between slab and rail according to manufacturer's written instructions to secure tracks and prevent movement.

D. Carriage Installation: Mount mobile carriages on track system with anti-tip brackets engaged by rails and adjust for smooth operation. Provide non-moving carriages securely fixed to rails where indicated.

3.3 SHELVING INSTALLATION

A. Attach shelving units to carriages according to manufacturer's written instructions and as required to prevent vibration during movement.

1. Level and plumb shelving units to a tolerance of 1/8 inch in 96 inches (3 mm in 2438 mm).

B. Starter/Adder Units: Connect groups together with standard fasteners according to manufacturer's written instructions, using concealed fasteners where possible.

C. Install shelves in shelving units at locations indicated on Drawings and according to manufacturer's written instructions.

D. Shelving Enclosure Panels: Install end panels and canopy tops with concealed fasteners.

3.4 CLEANING AND PROTECTING

A. Repair or remove and replace defective work as directed on completion of installation.

B. Clean finished surfaces, touch up as required, and remove or refinish damaged or soiled areas to match original factory finish, as approved by Architect.

C. Protect installed products from damage during remainder of the construction period.

3.5 DEMONSTRATION

A. Engage a factory-authorized service representative to train Owner's maintenance personnel to adjust, operate, and maintain mobile storage shelving.

END OF SECTION 105626

SECTION 107516 - GROUND-SET FLAGPOLES

PART 1 - GENERAL

1.1 SUMMARY

A. Section includes ground-set flagpoles made from [**aluminum**][**copper alloy (bronze)**][**stainless steel**][**steel**][**and**][**fiberglass**].

B. Owner-Furnished Material: Flags.

1.2 ACTION SUBMITTALS

A. Product Data: For each type of product.

1. Include construction details, material descriptions, dimensions of individual components and profiles, operating characteristics, fittings, accessories, and finishes for flagpoles.

B. Shop Drawings: For each flagpole.

1. Include the following

a. Plans, elevations, and attachment details. Show general arrangement, jointing, fittings, accessories, grounding, anchoring, and support.
b. Section, and details of foundation system.

C. Samples for Verification: For each type of exposed finish, in manufacturer's standard sizes.

D. Delegated Design Submittals: For flagpoles.

1.3 CLOSEOUT SUBMITTALS

A. Operation and Maintenance Data: For flagpoles to include in operation and maintenance manuals.

1.4 DELIVERY, STORAGE, AND HANDLING

A. Spiral wrap flagpoles with heavy paper and enclose in a hard fiber tube or other protective container.

PART 2 - PRODUCTS

2.1 SOURCE LIMITATIONS

A. Obtain flagpoles as complete units, including fittings, accessories, bases, and anchorage devices, from single source from single manufacturer.

2.2 PERFORMANCE REQUIREMENTS

A. Delegated Design: Engage a qualified professional engineer, as defined in Section 014000 "Quality Requirements," to design flagpole assemblies.

B. Seismic Performance: Flagpole assemblies to withstand the effects of earthquake motions determined according to [**ASCE/SEI 7**]<**Insert requirement**>.

C. Structural Performance: Flagpole assemblies, including anchorages and supports, to withstand design loads indicated within limits and under conditions indicated.

1. Wind Loads: Determine according to NAAMM FP 1001. Basic wind speed for Project location is <**Insert wind speed**>.
2. Base flagpole design on [**polyester**][**nylon or cotton**] flags of maximum standard size suitable for use with flagpole or flag size indicated, whichever is more stringent.

2.3 FITTINGS

A. Finial Ball: Flush-seam ball, sized as indicated or, if not indicated, to match flagpole-butt diameter.

1. **0.063-inch** spun aluminum[**, finished to match flagpole**][**with gold anodic finish**].
2. **20-oz.** copper with 23-karat, gold-leaf finish.
3. Spun stainless steel, finished to match flagpole.
4. Spun copper alloy, finished to match flagpole.

B. Finial Eagle: Sized [**as indicated**][**as standard with manufacturer for flagpole size indicated**]<**Insert size**>.

1. Cast aluminum[**, finished to match flagpole**][**with gold anodic finish**].
2. **20-oz.** copper with 23-karat, gold-leaf finish.

2.4 MISCELLANEOUS MATERIALS

A. Nonshrink, Nonmetallic Grout: Factory-packaged, nonstaining, noncorrosive, nongaseous grout complying with ASTM C1107/C1107M.

B. Drainage Material: Crushed stone, or crushed or uncrushed gravel; coarse aggregate.

C. Sand: ASTM C33/C33M, fine aggregate.

D. Elastomeric Joint Sealant: [**Multicomponent nonsag urethane**][**Single-component nonsag urethane**][**Single-component neutral-curing silicone**] joint sealant complying with requirements in Section 079200 "Joint Sealants."

E. Bituminous Paint: Cold-applied asphalt emulsion complying with ASTM D1187/D1187M.

2.5 ALUMINUM FINISHES

A. Natural Satin Finish: AA-M32, fine, directional, medium satin polish; buff complying with AA-M20; seal aluminum surfaces with clear, hard-coat wax.

B. Clear Anodic Finish: AAMA 611, [**AA-M12C22A41**][**AA-M12C22A31**].

C. Color Anodic Finish: AAMA 611, [**AA-M12C22A42/A44**][**AA-M12C22A32/A34**].

1. Color: [**Light bronze**][**Medium bronze**][**Dark bronze**][**Black**][**As indicated by manufacturer's designation**][**Match Architect's sample**][**As selected by Architect from manufacturer's full range**]<**Insert color**>.
2. Appearance of Finished Work: Noticeable variations in same piece are not acceptable. Variations in appearance of adjoining components are acceptable if they are within the range of approved Samples and are assembled or installed to minimize contrast.

D. Gold Anodic Finish: AAMA 611, AA-M32C22A43; gold color.

E. Baked-Enamel or Powder-Coat Finish: AAMA 2603 except with a minimum dry film thickness of **1.5 mils**. Comply with coating manufacturer's written instructions for cleaning, conversion coating, and applying and baking finish.

1. Color and Gloss: [**As indicated by manufacturer's designations**][**Match Architect's sample**][**As selected by Architect from manufacturer's full range**]<**Insert color and gloss**>.

F. High-Performance Organic Finish: Two-coat fluoropolymer finish complying with [**AAMA 2604**][**AAMA 2605**] and containing not less than [**50**][**70**] percent PVDF resin by weight in color coat. Prepare, pretreat, and apply coating to exposed metal surfaces to comply with coating and resin manufacturers' written instructions.

1. Color and Gloss: [**As indicated by manufacturer's designations**][**Match Architect's sample**][**As selected by Architect from manufacturer's full range**]<**Insert color and gloss**>.

2.6 COPPER-ALLOY FINISHES

A. Hand-Rubbed Finish, Lacquered: Directionally textured, fine satin, mechanical finish coated with lacquer specified for copper alloys, applied by air spray in two coats per manufacturer's written instructions, with interim drying, to a total thickness of **1 mil**.

B. Statuary Conversion Coating over Satin Finish: Directionally textured, fine satin, mechanical finish with sulfide conversion coating.

1. Color: Match Architect's sample.
2. Appearance of Finished Work: Noticeable variations in same piece are not acceptable. Variations in appearance of adjoining components are acceptable if they are within the range of approved Samples and are assembled or installed to minimize contrast.

2.7 STAINLESS STEEL FINISHES

A. Surface Preparation: Remove tool and die marks and stretch lines, or blend into finish.

B. Polished Finishes: Grind and polish surfaces to produce uniform finish, free of cross scratches.

1. When polishing is completed, passivate and rinse surfaces. Remove embedded foreign matter and leave surfaces chemically clean.
2. Directional Satin Finish: No. 4.

2.8 STEEL FINISHES

A. Flagpole Interior Finish: Apply one coat of bituminous paint on interior of flagpole.

B. Galvanized Finish: Hot-dip galvanize after fabrication to comply with ASTM A123/A123M.

C. Polyurethane Enamel Finish: Remove mill scale and rust, if present, from uncoated steel, complying with [**SSPC-SP 5/NACE No. 1, "White Metal Blast Cleaning"**][**or**][**SSPC-SP 8, "Pickling"**]<**Insert surface preparation method**>. After cleaning, apply manufacturer's standard primer and two-coat, high-gloss, high-build, polyurethane-enamel finish.

1. Color: [**As indicated by manufacturer's designations**][**Match Architect's sample**][**As selected by Architect from manufacturer's full range**]<**Insert color**>.

D. Baked-Enamel or Powder-Coat Finish: Remove mill scale and rust, if present, from uncoated steel, complying with [**SSPC-SP 5/NACE No. 1, "White Metal Blast Cleaning"**][**or**][**SSPC-SP 8, "Pickling"**]<**Insert surface preparation method**>. After cleaning, apply a conversion coating suited to the organic coating to be applied over it. After cleaning and pretreating, apply manufacturer's standard two-coat, baked-on finish consisting of prime coat and thermosetting topcoat to a minimum dry film thickness of **2 mils**.

1. Color and Gloss: [**As indicated by manufacturer's designations**][**Match Architect's sample**][**As selected by Architect from manufacturer's full range**]<**Insert color and gloss**>.

2.9 FIBERGLASS FINISHES

A. Fiberglass: UV-light stable, hard, high-gloss gel coat or high-gloss, high-build polyurethane or polyester coating.

1. Color: [**As indicated by manufacturer's designations**][**Match Architect's sample**][**As selected by Architect from manufacturer's full range**]<**Insert color**>.

PART 3 - EXECUTION

3.1 PREPARATION

A. Prepare uncoated metal flagpoles that are set in foundation tubes by painting below-grade portions with a heavy coat of bituminous paint.

B. Foundation Excavation: Excavate to neat clean lines in undisturbed soil. Remove loose soil and foreign matter from excavation and moisten earth before placing concrete. Place and compact drainage material at excavation bottom.

C. Provide forms where required due to unstable soil conditions and for perimeter of flagpole base at grade. Secure and brace forms to prevent displacement during concreting.

D. Foundation Tube: Place foundation tube, center, and brace to prevent displacement during concreting. Place concrete. Plumb and level foundation tube and allow concrete to cure.

E. Sleeves: Locate and secure sleeves in forms by bracing to reinforcement and forms.

F. Anchor Bolts: Locate and secure anchor bolts in forms with templates and by tying to reinforcement.

G. Place concrete, as specified in Section 033000 "Cast-in-Place Concrete." Compact concrete in place by using vibrators. Moist-cure exposed concrete for no fewer than seven days or use nonstaining curing compound.

H. Trowel exposed concrete surfaces to a smooth, dense finish, free of trowel marks, and uniform in texture and appearance. Provide positive slope for water runoff to perimeter of concrete base.

3.2 FLAGPOLE INSTALLATION

A. General: Install flagpoles where indicated and according to[**Shop Drawings and**] manufacturer's written instructions.

B. Foundation Tube: Place flagpole in tube, seated on bottom plate between steel centering wedges, and install hardwood wedges to secure flagpole in place. Place and compact sand in foundation tube and remove hardwood wedges. Seal top of foundation tube with a **2-inch** layer of elastomeric joint sealant and cover with flashing collar.

C. Baseplate: Cast anchor bolts in concrete foundation. Install baseplate on washers placed over leveling nuts on anchor bolts and adjust until flagpole is plumb. After flagpole is plumb, tighten retaining nuts and fill space under baseplate solidly with nonshrink, nonmetallic grout. Finish exposed grout surfaces smooth and slope 45 degrees away from edges of baseplate.

END OF SECTION 107516

SECTION 111900 – GENERAL PROVISIONS FOR DETENTION WORK

PART 1 - GENERAL

1.1 RELATED DOCUMENTS

A. Drawings and general provisions of the Contract, including General and Supplementary Conditions and Division 01 Specification Sections, apply to this Section.

1.2 SUMMARY

A. This Section includes the responsibilities for a single-source Detention Equipment Contractor and special procedures for Detention Work.

B. Detention Work required by, but not specified in, this Section work includes the following:

1. Division 11 Section "Detention Hollow Metal Doors and Frames"
2. Division 11 Section "Detention Access Panels"
3. Division 11 Section "Detention Hardware"
4. Division 11 Section "Detention Sliding Door Locks Devices"
5. Division 11 Section "Pneumatic Air Locking System"
6. Division 11 Section "Detention Glass and Glazing"
7. Division 11 Section "Detention Furnishings and Equipment"
8. Division 11 Section "Detention Toilet Accessories"
9. Division 11 Section "Detention Gun Lockers"
10. Division 11 Section "Detention Windows"
11. Division 11 Section "Detention Hollow Metal Wall Panels"
12. Division 11 Section "Detention Enclosures"
13. Division 11 Section "Detention Padded Surface System"
14. Division 11 Section "Detention Metal Ceiling Assemblies"

1.3 DESCRIPTION OF WORK

A. General Contractor:

1. The General Contractor shall employ a single pre-approved Detention Equipment Contractor having met all the requirements listed in this Section. The General Contractor shall list his Detention Equipment Contractor on the bid form. Contracting by the General Contractor for separate portions of work under Sections 111900 through 111983 is prohibited.

B. Detention Equipment Contractor (DEC):

1. The Detention Equipment Contractor shall be responsible for submitting an aggregate bid to the General Contractor for all Division 11 Detention and Security work described

herein and elsewhere in the Contract Documents.

2. The Detention Equipment Contractor shall be responsible for the interfacing and integration of products and systems with the General Contractor and the Security Electronics Contractor (SEC) to ensure that the entire work of this project will be carried out in an orderly, complete and coordinated fashion.
3. The Detention Equipment Contractor shall provide a full time Superintendent to supervise the work in this section. The Superintendent shall be at the site when the Detention Equipment Contractor's work is being performed at the site.

1.4 QUALITY ASSURANCE

A. The Detention Equipment Contractor (DEC) shall furnish detention equipment as described in these sections, and shall coordinate this equipment with his manufacturers, fabricators, installers, and with work by others. Questions on the detention equipment must be directed to the Detention Equipment Contractor before being directed to the General Contractor, Architect/Engineer or Owner.

B. Acceptable Pre-qualified Detention Equipment Contractors:

1. CML Security; Broomfield, CO 80023; 720/466-3650
2. Cornerstone Detention Products, Inc.; Tanner, AL 35671; 877/374-7311
3. Jails Correctional Products; Minster, OH 45865; 419/628-4428
4. Montgomery Technology Systems, LLC; San Antonio, TX 78216; 334/382-7441
5. Noah Detention Construction; Niceville, FL 32578; 850/279-3257
6. Pauly Jail Building Co., Inc.; Noblesville, IN 46062; 317/580-0833
7. SecurTec Inc.; Denham Springs, LA 70726; 225/380-5536
8. Southern Folger Detention Equipment Company; San Antonio, TX 78223; 210/533-1231
9. Stronghold Industries; Racine, WI 53406; 262/886-1077
10. Sweeper Metal Fabricators Corp.; Drumright, OK 74030; 918/352-2133
11. U.S. Security Systems, Inc.; Dadeville, AL 36853; 334/273-8778
12. Valley Security Company; Elgin, IL 60177; 847/888-9972

C. Other [All] Detention Equipment Contractor who intends to submit a bid on this section of the Specifications shall submit the following data to the Architect in writing twenty (20) days prior to bid date and shall be approved by addendum ten (10) days prior to bid date. Verbal approval will not satisfy this requirement. Grounds for disqualification shall exist if it is proven that the information submitted is inaccurate or, in the opinion of the Architect, does not satisfy the requirements.

1. Contractor Qualification Statement AIA-305A.
2. List of projects under construction. The list shall include the following information for each project:

    a. Name and location of installation
    b. General Project Description
    c. Name of Owner's representative and phone number
    d. Name of Architect/Engineer and phone number
    e. Name of General Contractor and phone number
    f. Contract amount

g. Percent Complete
h. Scheduled completion date

3. Evidence that this firm or principal members have a minimum of ten (10) years' experience in successfully completing projects of equal scope and magnitude with products as specified. Submit a list of ten (10) projects of similar scope that have been completed and operational for a minimum of three (3) years. The list shall include the following information for each project:

   a. Name and location of installation
   b. General Project Description
   c. Date of occupancy by Owner
   d. Name of Owner's representative and phone number
   e. Name of Architect/Engineer and phone number
   f. Name of General Contractor and phone number
   g. Contract amount
   h. Percentage of the cost of the work performed with your own forces.

4. List of key personnel and qualifications.
5. List of all projects in the past five (5) years in which this firm has been involved in litigation with a City, County, State or Federal government agency. Include the current status of each legal action, and the other parties to the litigation.
6. Letter from an approved and A-15 rated bonding company stating that the Detention Equipment Contractor can be bonded for this complete project if awarded the Contract.
7. Financial Statement for previous fiscal year.
8. List of manufacturers of all equipment intended to be bid as part of your work.
9. Letters from manufacturers of detention hollow metal door and frames, detention hardware and detention sliding door locking devices stating that your firm will be able to purchase all materials required for this project.
10. Letters from specified detention hardware and detention sliding door locking devices manufacturers that your firm is a qualified installer of their products.

D. Materials required for installation by the Detention Equipment Contractor may be provided by any of the detention equipment manufacturers included in the Project Manual. The Detention Equipment Contractor shall receive the materials and assume complete responsibility for the detailing, coordination, erecting, installation and performance and warranty of such work.

E. The Detention Equipment Contractor shall be required to provide a labor and materials payment bond in the amount of 100% of the contract sum.

1.5 COORDINATION

A. Coordinate detention work to ensure efficient and orderly installation of each part of detention work. Coordinate detention work that depends on each other for proper installation, connection, and operation.

1. Develop special procedures required for coordination of detention work.
2. Coordinate installation of different detention components to ensure maximum accessibility for required maintenance, service, and repair.

3. Coordinate provisions to accommodate detention work scheduled for later installation.

B. Coordinate selection of detention products for compatibility.

C. Assemble and coordinate Shop Drawings for detention work provided by separate entities responsible for detention work. Submit detention work submittals simultaneously as a group along with applicable Coordination Drawings.

D. Coordinate installation of anchorages and embedment's for detention work. Obtain and distribute, to parties involved, setting drawings, templates, and directions for installing anchorages, including sleeves, concrete inserts, anchor bolts, and items with integral anchors, that are to be embedded in concrete or masonry. Deliver such items to Project site in time for installation.

1. Check Shop Drawings of other work to confirm that adequate provisions are made for locating and installing detention work to comply with indicated requirements.

E. Coordinate protection of detention work.

F. Coordinate preparation of Project Record Documents for detention work and integrate information from entities responsible for detention work to form one combined record.

G. Coordinate preparation of operation and maintenance manuals for detention work and integrate information from entities responsible for detention work to form one combined record.

1.6 SHAKEDOWN PERIOD

A. The Detention Equipment Contractor shall coordinate with the General Contractor to establish a shakedown period for the detention work. The shakedown period shall be a minimum of thirty days and shall be completed after Substantial Completion.

B. Prior to initiation of the shakedown period, all work related to and supporting the detention material shall be completed.

C. The Detention Equipment Contractor shall maintain a log of all anomalies, malfunctions, and repairs encountered during the shakedown period. The log shall be submitted to the Architect for assessment at the conclusion of the shakedown period.

D. Training of the Owner's staff shall occur after substantial completion.

1.7 WARRANTY

A. The Detention Equipment Contractor shall warrant materials furnished under this Section to be free from defects in material and workmanship. The Detention Equipment Contractor shall provide all labor and materials to repair or replace defective detention equipment work or components.

B. The Detention Equipment Contractor shall maintain the quantities of spare parts provided to the

Owner in the original inventory during the warranty period. Components used for repair shall be replaced immediately and Owner shall not be charged for shipping or other costs unless failure is due to abuse or negligence.

C. The Owner and/or Owner's Representative shall notify the Detention Equipment Contractor on a twenty-four (24) hour phone number (supplied by the Detention Equipment Contractor), outlining defects in the detention equipment. The Detention Equipment Contractor shall respond to this call within two hours with a return call by a service technician.

D. The warranty shall exclude vandalism, misuse, acts of nature or abuse.

E. The warranty shall provide for a maximum response time (service technician on the site) of twenty-four (24) hours on the first occurrence and twelve (12) hours on the second occurrence. The Detention Equipment Contractor shall also guarantee shipment of any part request within twenty-four (24) hours during the warranty period.

F. Record maintenance and service calls by signing the Owner's project logbook maintained on the premises.

PART 2 - PRODUCTS (Not Used)

PART 3 - EXECUTION

3.1 EXAMINATION

A. Examine substrates, areas, and conditions, with Installer present, for compliance with requirements for installation tolerances and other conditions affecting performance of detention work.

1. Examine roughing-in for embedded and built-in anchors to verify actual locations of detention work connections before detention work installation.
2. For the record, prepare written report, endorsed by Installer, listing conditions detrimental to performance of detention work.

B. Inspect built-in and cast-in anchor installations before installing detention work to verify that anchor installations comply with requirements. Prepare inspection reports.

1. Where inspections indicate that anchors do not comply with specified requirements, re-inspect after repairs or replacements are made.
2. Perform additional inspections to determine compliance of replaced or additional work. Prepare inspection reports.

C. Verify locations of detention work with those indicated on Coordination Drawings.

3.2 FIELD QUALITY CONTROL

A. Observe field welding of detention work and anchorages.

B. Verify that detention work is installed and connected according to the Contract Documents.

C. Verify that electrical wiring installation complies with manufacturer's submittal and written installation requirements in Division 26 Sections.

D. Observe startup service of detention work.

E. Observe installation and startup checks of detention work according to manufacturer's written instructions.

F. Inspect installed detention work to verify compliance with requirements. Prepare inspection reports and indicate compliance with and deviations from the Contract Documents.

1. Perform additional inspections to determine compliance of replaced or additional work. Prepare inspection reports.
2. Prepare field quality-control certification that states installed detention work and its installation complies with requirements in the Contract Documents.

G. Testing: After installing detention work and after electrical circuitry has been energized, test detention work for compliance with requirements.

1. When testing reveals detention work not in compliance with requirements, perform additional random testing to determine extent of noncompliance.
2. Where test results indicate that detention work does not comply with specified requirements, retest after repairs or replacements are made.
3. Perform additional testing and inspecting, at Contractor's expense, to determine compliance of replaced or additional work.

END OF SECTION 11 19 00

SECTION 111913 – DETENTION HOLLOW METAL DOORS AND FRAMES

PART 1 - GENERAL

1.1 RELATED DOCUMENTS

A. Drawings and general provisions of the Contract, including General and Supplementary Conditions and Division 01 Specification Sections, apply to this Section.

1.2 SUMMARY

A. Section Includes:

1. Detention hollow metal doors, door frames, and window frames.

B. Related Requirements:

1. Division 11 19 00 “General Provisions for Detention Work
2. Division 11 19 23 “Detention Hardware”
3. Division 11 19 46 “Detention Sliding Door Locking Devices”

1.3 PERFORMANCE REQUIREMENTS

A. Detention doors and frames for this Contract shall be constructed as specified and to meet the following tests. An independent testing laboratory shall perform the tests described below, with data attesting to construction of the door and frame. Test data shall have been performed within the past five (5) years and shall be submitted with the shop drawing submittal.

1. Doors tested in accordance with Standard UL-752, “Bullet Penetration”.
2. Doors tested in accordance with ASTM F 1450, “Door Assembly Impact Test”.
3. Doors tested in accordance with ASTM F 1450, “Door Static Load Test”.
4. Doors tested in accordance with ASTM F 1450, “Door Rack Test”.
5. Doors tested in accordance with Methods E152, Standard UL-10 (B), or Methods NFPA 252, “Door Assembly Fire Test”.
6. Doors tested in accordance with ASTM F 1450, “Door Edge Crush Test”.
7. Doors tested in accordance with NAAMM HMMA 863-98, “Removable Glazing Stop Test”.
8. Frames tested in accordance with ASTM F1592, “Standard Test Methods for Detention Hollow Metal Vision Systems”.

1.4 SUBMITTALS

A. Product Data: For each type of product.

1. Include construction details, material descriptions, core descriptions, label compliance, fire-resistance rating, and finishes for each type of detention door and frame specified.

B. Shop Drawings: For detention doors and frames. Include conditions at openings, details of construction, dimensions of profiles, and details of joints and connections. Show anchorage and accessories. Identify each detention door and frame using same reference numbers for openings as those on Drawings.

C. Coordination Drawings: Drawings of each opening, including detention door and frame, drawn to scale and coordinating detention door hardware. Show the following:

1. Locations, dimensions, and profiles of detention door hardware reinforcements.
2. Locations and installation details of detention door hardware.
3. Elevations of each detention door design type showing dimensions, locations of detention door hardware, and preparations for power, signal and [**electrified**] [**and**] [**pneumatic**] control systems.
4. Details of each detention frame type.

D. Samples:

1. Door: 12 by 12 inches (305 by 305 mm) corner section with hinge mortise and reinforcement showing internal construction.
2. Frame: 12 by 12 inches (305 by 305 mm) corner section showing welding of head to jamb. Include hinge mortise, reinforcement and plaster guard in one rabbet, and glazing stop applied as specified in the opposite rabbet. Glazing stop shall be applied in both head and jamb section to show corner joint.
3. Samples submitted shall be of the production type and shall represent in all respects the minimum quality of work to be furnished by the manufacturer. No work represented by the samples shall be fabricated until the samples are approved, and any downgrading of quality demonstrated by the sample can be cause for rejection of the work.

E. Certification by Manufacturer: That products supplied complies with performance requirements specified.

F. Product Test Reports: Showing compliance with specified requirements.

G. Warranties: Special warranties specified in this Section.

1.5 QUALITY ASSURANCE

A. Detention Equipment Contractor (DEC) Qualifications:

1. General: Refer to Section 111900.

B. Provide detention hollow metal work manufactured by a single firm specializing in the production of this type of work.

C. Installation shall be under supervision of manufacturer approved personnel.

D. When a fire resistance classification is shown or scheduled for steel doors and frames, provide fire rated doors investigated and tested as a fire door assembly, complete with type of hardware to be used. Identify each fire door with recognized testing laboratory labels, indicating applicable fire rating of steel doors.

E. Uniform Building Code:

1. Comply with UBC 1997 and UBC Standard 7-2.

F. Temperature rise rated assemblies: Provide assemblies rated for 450 degree F maximum temperature rise at 30 minutes at doors to stairwells, exit passageways, horizontal exits and other locations indicated on Drawings.

G. Door identification label to include: Fire protection rating under positive pressure, minimum latchbolt throw and maximum temperature rise.

H. Include supplemental “S” label on 20 minute doors and other openings where doorway occurs in a 1-hour rated exit access corridor.

I. Hardware: Coordinate products used during fire tests meeting UBC 7-2 including component gasket systems for “S” label.

J. When a fire resistance classification is shown or scheduled for steel doors and/or frames containing components that have not been tested as an assembly, the manufacturer shall construct the door and frame components of the assembly in accord with the requirements of the testing laboratory for the desired fire resistance rating, and certify in writing to the Owner, Enforcing Authority, Contractor and the Architect that the door and frame components have been constructed in accord with the testing laboratory requirements in lieu of label.

1.6 JOB CONDITIONS

A. Hardware Coordination Conference:

1. See Detention Hardware Section 111923.

1.7 DELIVERY, STORAGE AND HANDLING

A. Deliver, store and handle hollow metal work per manufacturer's requirements.

1.8 WARRANTY

A. General Warranty: The special warranty specified in this Article shall not deprive the Owner of other rights the Owner may have under other provisions of the Contract Documents and shall be in addition to, and run concurrent with, other warranties made by the Contractor under requirements of the Contract Documents.

B. Special Warranty: Submit a written warranty executed by the manufacturer and installer agreeing to repair or replace materials furnished under this Section that fail in materials or workmanship within the specified warranty period. Submit the warranty to the Architect for approval.

C. Warranty Period: One (1) year from date of Substantial Completion.

PART 2 - PRODUCTS

2.1 MANUFACTURER OF DETENTION HOLLOW METAL DOORS AND FRAMES

A. Source Limitations: Obtain detention doors and frames from single source from single manufacturer.

B. Manufacturers: Subject to compliance with requirements, provide products by one of the following:

1. Trussbilt Inc.; St. Paul, MN
2. Habersham Metal Products, Cornelia, GA
3. American Steel Products, Swainsboro, GA
4. Titan Metal Products, Merced, CA
5. Willo Products; Decatur, AL
6. Claborn Manufacturing, Hartselle, AL

2.2 DETENTION HOLLOW METAL DOORS

A. Materials:

1. Galvanealed steel sheets: Zinc-coated carbon steel sheets of commercial quality, complying with ASTM A 653/A 653M, A60 zinc coating.
2. Steel shall be free of scale, pitting, coil breaks or other surface blemishes. It shall be free of buckles, waves or any other defects caused by the use of improperly leveled sheets.
3. Interior and exterior doors: Face sheets shall be 0.093 inch (2.3 mm) minimum thickness galvanealed steel.

B. Construction:

1. Provide detention hollow metal doors of the types and sizes indicated on the drawings and schedules. Doors shall be constructed in accordance with the specifications and shall meet the performance requirements.
2. Doors shall be neat in appearance and free from warpage or buckle. Edge bends shall be true and straight and of minimum radius for the thickness of material used.
3. Internal Core Construction: One of the following two (2) types may be used:

   a. Door face sheets shall be vertically stiffened by formed steel sections which are continuous and upon assembly, shall span the full thickness of the interior space

between door faces. These stiffeners shall be 0.042 inch (1.0 mm) minimum thickness, spaced so that the vertical interior webs shall be no more than 4 inches (102 mm) apart and securely attached to both face sheets by spot welds spaced a maximum of 3 inches (76 mm) on center vertically. After assembly of the door, stiffeners shall be welded together, on both sides, over their entire length with tack welds or spot welds spaced 16 inches (406 mm) on center maximum. Spaces between stiffeners shall be filled with fiberglass or mineral rock wool batt-type material.

b. Continuous steel truss design core material, 0.015 inch (0.4 mm) minimum mild steel, having truncated triangular sections extending continuously from one panel face to the other, spot welded to each face sheet 2-3/4 inches (69.9 mm) on center horizontally and 3 inches (76.2 mm) on center vertically. Core material shall extend the full height and width of the panel. Internal hollow spaces shall be filled with fiberglass or mineral rock wool batt-type material.

4. The vertical edges shall be reinforced by a continuous steel channel, not less than 0.123 inch (3.12 mm) minimum thickness extending the full length of the door. The top and bottom edges shall be closed with a continuous steel channel, not less than 0.123 inch (3.12 mm) minimum thickness, spot welded to both face sheets a maximum of 3 inches (76 mm) on center vertically. The 0.123 inch (3.12 mm) closing end channel shall be continuously welded to the vertical reinforcing channel at all four corners producing a fully welded perimeter reinforcing channel.
5. The end channels shall be fitted with an additional flush closing channel of not less than 0.053 inch (1.3 mm) thickness. The flush closing channel shall be welded in place at the corners with continuous welds and 1 inch (25.4 mm) long welds, 12 inches (304 mm) on center maximum along the length, on both sides. Tops of exterior doors shall be made weather tight where specified.
6. Door face sheets shall be joined at their vertical edges by a continuous weld extending the full height of the door and finished smooth such that there are no visible seams.
7. Doors shall be smooth, flush surfaces without visible joints or seams on exposed faces or stile edges, except around glazed or louvered panel inserts.
8. Edge profiles shall be provided on both vertical edges of doors as follows:

   a. Single acting doors: beveled 1/8 inch in 2 inches (3 mm in 51 mm) profile.
   b. Sliding doors or equivalent: square profile.

9. Hardware reinforcements and preparation:

   a. Doors shall be mortised, reinforced, drilled and tapped at the factory for hardware, in accordance with the final approved hardware schedule and templates provided by the hardware supplier.
   b. Minimum hardware reinforcement shall be as follows:

      1) Mortise hinges: Steel plate 0.187 inch (4.7 mm) thick by full height, secured by spot-welds 4 inches (102 mm).
      2) Maximum-Security Surface Hinges: 0.250 inch (6.3 mm) thick.
      3) Mortise Locksets and Dead Bolts: 0.187 inch (4.7 mm) thick steel sheet, welded to inside of door on detention side (cell side) and 0.187 inch (4.7 mm) thick steel lock mounting plate, beveled at edges, applied to the

surface of the door with security screws.

4) Reinforcement for slide device hanger attachment: per device manufacturer's recommendations.
5) Closers: 0.093 inch (2.3 mm) minimum thickness steel, secured with not less than 6 spot welds.
6) Push Plates and Loop Pulls: 0.053 inch (1.3 mm) thick steel, secured with not less than 2 spot welds.
7) Automatic Door Bottoms: 0.093 inch (2.3 mm) minimum thickness steel.

10. Glass moldings and stops:

    a. Doors shall be provided with steel moldings to secure glazing by others in accordance with glass sizes and thicknesses shown on the drawings and approved submittal drawings.
    b. Fixed glass molding shall not be less than 0.093 inch (2.3 mm) steel around perimeter and shall be spot welded to both face sheets at 3 inches (76 mm) on center maximum.
    c. Removable glass stops shall consist of 0.123 inch (3.12 mm) minimum thickness steel galvanealed angle. Angle stops shall be mitered or notched and tight fitting at the corner joints, and securely fastened to the frame using torx-head (star with center pin) security screws of the size, strength and spacing necessary to satisfy impact performance criteria.
    d. Removable glass stops shall be on the side opposite the area of inmate confinement or where they are likely to be supervised.

11. Removable lock cover plate to be on the hinge side, unless door swings into a room and there is no other access to the room, then removable lock cover plate is to be on the stop side.
12. Coordinate electric hardware requirements to be integrally built into the door with the hardware requirements.
13. Provide dust box (welded to interior of door edge) at bolt receiver hole.
14. Provide weep hole openings in the bottom of exterior doors to permit the escape of entrapped moisture.
15. Food pass / cuff port openings:

    a. The food pass opening shall be a flush opening fabricated using interior channels, 0.093 inch (2.3 mm) minimum thickness steel, securely welded to the inside of both face sheets and dressed smooth. The four corner seams shall be continuously arc welded and dressed smooth. The finished opening shall be constructed such that it cannot be dismantled or otherwise affected by tampering.
    b. Provide food pass shutters as detailed on the drawings. The food pass shutter shall be constructed from a hollow metal door panel. Welds shall be ground smooth. The food pass shutter and hinge shall be factory installed by plug welds.
    c. The food pass shall be furnished with a full width Braun hinge, shutter bumpers, a food pass lock, lock mount, and escutcheon.

2.3 DETENTION HOLLOW METAL FRAMES

A. Materials:

1. Galvanealed steel sheets: Zinc-coated carbon steel sheets of commercial quality, complying with ASTM A 653/A 653M, A60 zinc coating.
2. Steel shall be free of scale, pitting, coil breaks or other surface blemishes. It shall be free of buckles, waves or any other defects caused by the use of improperly leveled sheets.
3. Interior and exterior openings: 0.093 inch (2.3 mm) minimum thickness galvanealed steel.

B. Construction:

1. Provide detention hollow metal frames of the types and sizes indicated on the drawings and schedules. Frames shall be constructed in accordance with the specifications and shall meet the performance requirements.
2. Frames shall be neat in appearance, square, and free of defects, warpage and buckles. Press steel members shall be straight and of uniform profile throughout their lengths.
3. Jamb, header, and sill profiles shall be as indicated on the drawings.
4. Fabricate frames with mitered corners continuously welded through head inside corner and miter ground smooth.
5. When shipping limitations or site access so dictate, or when advised by the contractor responsible for installation, frames for large openings shall be fabricated in sections designated for assembly in the field by others. Alignment plates or angles shall be installed at each joint. Such components shall be the same material and thickness as the frame. Field joints shall be made in accordance with approved submittal drawings, and shall be field welded by others.
6. Frames for multiple openings shall have mullion members which, after fabrication, are closed tubular shapes conforming to profiles shown on the drawings, and having no visible seams or joints. All joints between faces of abutted members shall be continuously welded and finished smooth. All joints between stops of abutted members shall be welded along the soffit and shall be left neat and uniform in appearance. The General Contractor shall provide for welding and finishing all field joints between faces of abutted members.
7. Hardware reinforcements and preparation:

    a. Frames shall be mortised, reinforced, drilled and tapped at the factory for hardware, in accordance with the final approved hardware schedule and templates provided by the hardware supplier.
    b. Minimum hardware reinforcement shall be as follows:

        1) Hinges and Pivots: Provide an additional 0.187 inch (4.7 mm) thick angle back up drilled and tapped to accommodate security screws, welded to reinforcing and inside trim of frame.
        2) Strike Plate Clips: Steel plate 0.187 inch (4.7 mm) thick by 1-1/2 inches (38 mm) wide by 3 inches (76 mm) long.
        3) Closers: 0.093 inch (2.3 mm) minimum thickness steel, secured with not less than 6 spot welds.

8. Floor anchors:

a. Floor anchors with two holes for fasteners shall be fastened inside jambs with at least four (4) spot welds per anchor.
b. Where so scheduled, adjustable floor anchors, providing not less than 2 inches (51 mm) height adjustment, shall be fastened inside jambs with at least four (4) spot welds per anchor.
c. Thickness of floor anchors shall be the same as frame.

9. Jamb anchors:

a. Anchor spacing:

1) The number of jamb anchors provided on each jamb shall be as follows:

a) For borrowed lite frames provide two (2) anchors plus one (1) for each 18 inches (457 mm) or fraction thereof over 36 inches (914 mm), spaced at 16 inches (406 mm) maximum between anchors.
b) For door frames provide two (2) anchors plus one (1) for each 18 inches (457 mm) or fraction thereof over 54 inches (1372 mm), spaced at 16 inches (406 mm) maximum between anchors (U.L. fire ratings may require additional anchors).

b. Masonry types:

1) Frames for installation in masonry walls shall be provided with adjustable jamb anchors of the strap and stirrup type made from the same thickness steel as the frame. Straps shall be no less than 2 inches by 10 inches (51 mm by 254 mm) in size, corrugated and/or perforated.

c. Expansion bolt type:

1) Frames for installation in existing masonry or concrete walls shall be prepared for expansion bolt type anchors. The preparation shall consist of a countersunk hole for a 1/2 inch (12.7 mm) diameter bolt and a conduit spacer from the unexposed surface of the frame to the wall. The spacer shall be welded to the frame and spaced as described.
2) After sufficient tightening of the bolt, the bolt head shall be welded by the installation contractor so as to provide a non-removable condition. The welded bolt head shall be ground, dressed and finished smooth.

10. Grout guards shall be provided at hardware preparations, glazing stop screws and silencer preparations on frames to be set in masonry or concrete openings. Grout guards shall be sufficient to protect preparations from grout of a 4 inches (101.6 mm) maximum slump consistency which is hand troweled in place.

a. Glass stop screws shall be protected from grout by a steel threaded receptacle welded to the frame.
b. Door silencers: three (3) silencers per door minimum. Preparations shall be protected by steel grout guards.

11. Frames shall be provided with two (2) temporary steel spreaders welded to the bottom of the jambs to serve as bracing during shipping and handling. The installation contractor shall be responsible for finishing and touch-up of marks caused by spreader removal.
12. Removable lock cover plate to be on the hinge side, unless door swings into a room and there is no other access to the room, then removable lock cover plate is to be on the stop side.
13. Provide grout openings for vertical hollow metal frames sections that are not accessible for grouting due to steel lintels or other obstructions. The General Contractor shall provide for filling grout openings and finishing.
14. Provide separate conduit systems for door control, intercom, etc., within hollow metal frames.
15. Removable glazing stops:

    a. Removable glass stops shall consist of 0.123 inch (3.12 mm) minimum thickness steel galvanealed angle. Angle stops shall be mitered or notched and tight fitting at the corner joints, and securely fastened to the frame using torx-head (star with center pin) security screws of the size, strength and spacing necessary to satisfy impact performance criteria.
    b. Removable glass stops shall be on the side opposite the area of inmate confinement or where they are likely to be supervised.
    c. During shipment, non-security fasteners may be substituted to hold glass stops in place. The security fasteners shall then be included in the same shipment but packaged separately for protection until used to stop in the required glazing.

2.4 CLEARANCES AND TOLERANCES

A. Edge clearances for swinging doors shall not exceed the following:

1. Between doors and frames at head and jambs: 1/8 inch (3.2 mm).
2. Between edges of pairs of doors: 1/8 inch (3.2 mm).
3. At door sills where a threshold is used: 3/8 inch (9.5 mm).
4. At door sills where no threshold is used: 3/4 inch (19 mm).
5. Install fire-rated doors in accordance with NFPA Standard No. 80.

B. Manufacturing tolerance shall be maintained within the following limits:

1. Frames for single door or pair of doors: Width, measured between rabbets at the head: Nominal opening width plus 1/16 inch (1.6 mm), minus 1/32 inch (0.79 mm). Height (total length of jamb rabbet): Nominal opening height plus 3/64 inch (1.19 mm). Cross sectional profile dimensions:

a.	Face	Plus or minus 1/32 inch (0.8 mm)
b.	Stop	Plus or minus 1/32 inch (0.8 mm)
c.	Rabbet	Plus or minus 1/32 inch (0.8 mm)
d.	Depth	Plus or minus 1/32 inch (0.8 mm)
e.	Throat	Plus or minus 1/16 inch (1.6 mm)
f.	Flatness of large frames	1/8 inch in 10 feet (3.175 mm in 3.048 meter) of length or width

2. Swinging and sliding door:

a.	Width	Plus or minus 3/64 inch (1.1 mm)
b.	Height	Plus or minus 3/64 inch (1.1 mm)
c.	Thickness	Plus or minus 1/16 inch (1.6 mm)
d.	Hardware location	Plus or minus 1/32 inch (0.8 mm)
e.	Bow/ flatness	Plus or minus 1/8 inch (3.1 mm)

2.5 VISITORS BOOTH

A. See drawings and details for sizes, construction and location of visitors' booths.

B. Construction of frames for visitors' booth shall be as previously described for detention hollow metal frames.

C. Countertop: Provide 0.093 inch (2.3 mm) minimum thickness, continuous steel countertop panel, stitch welded to 3 inches by 3 inches by 0.3125 inch (76 mm by 76 mm by 8 mm) steel angles, located beneath each partition and at midpoint between partitions. Cut concrete masonry units for vertical leg of angle (LLH). Seal with LO-MOD gel joints to the concrete masonry units on both sides of booth.

D. Divider Panels: Provide dividers on both the inmate and visitors side of the partition as detailed. Dividers are to project 12 inches (305 mm) out from face of visitor partition and shall be 28 inches (711.2 mm) high. Dividers are to be constructed of channels and tube frames at the top, bottom, back and front edge, with sound absorbent insulation and 0.093 inch (2.3 mm) minimum thickness steel perforated panels welded to both sides. Entire assembly to be welded to the hollow metal partition and countertop with 1-1/2 inches (38 mm) long welds, 6 inches (152 mm) on center. Welds to be flush ground. Top edge to be flush with side panels. See drawings and details.

E. Fabrication: Frame work joints shall be full welded construction with no visible seams or joints on the faces. Joints between faces of abutting members shall be securely welded and finished smooth.

2.6 FINISH

A. After fabrication, doors and frames shall be thoroughly cleaned, degreased, bonderized and provided with one coat of primer.

B. Shop Applied Primer: Manufacturer's standard rust inhibitive enamel. Verify compatibility with finish coats as specified in Section 099113, Exterior Painting and Section 099123, Interior Painting. If compatibility is not ascertained during the bidding period, Contractor shall provide primer as specified in Section 099113, Exterior Painting and Section 099123, Interior Painting.

2.7 ELECTRICAL REQUIREMENTS

A. Detention hollow metal fabricator shall furnish and install junction boxes and conduit between junction boxes in door frames for electronic locks, door position switches, and intercom call stations; coordinate special hardware requirements with the Electrical Contractor and Detention Equipment Contractor.

B. See the Detention Hardware Schedule, the Detention Hollow Metal Door Schedules, and Details.

2.8 DETENTION EQUIPMENT ACCESSORIES

A. Provide accessories, anchorage inserts and security fasteners for a complete, tamperproof installation.

B. Exposed Security Fasteners:

1. Provide torx-head (star design with center pin) security fasteners for anchoring work in exposed detention areas. Comply with specification section 050553.
2. Finish shall match that specified of the item anchored.

PART 3 - EXECUTION

3.1 EXAMINATION

A. Examine substrates, areas, and conditions, with Installer present, for compliance with requirements for installation tolerances and other conditions affecting performance of the Work.

B. Examine roughing-in for embedded and built-in anchors to verify actual locations before installation.

C. Notify the General Contractor in writing of conditions detrimental to the proper and timely completion of the work.

D. For the record, prepare written report, endorsed by Installer, listing conditions detrimental to performance of the Work.

E. Proceed with installation only after unsatisfactory conditions have been corrected.

3.2 INSTALLATION

A. Expenses carried by the Architect/Engineer, Project Manager or Owner in troubleshooting equipment problems caused by inadequate workmanship or other form of poor performance on the part of the Contractor, shall be borne by the Contractor.

B. Install Detention Hollow Metal Doors and Frames in accordance with shop drawings, manufacturer's written installation instructions, and as herein specified.

C. Place detention hollow metal frames prior to construction of enclosing walls. Set frames accurately in position, plumbed and aligned (using metal shims), and braced securely until permanent anchors are set. After wall construction is completed, remove temporary braces and spreaders leaving surfaces smooth and undamaged.

D. Prior to installation, frames shall be checked for size, and swing, and with temporary spreaders removed, corrected for squareness, alignment, twist and plumb. Permissible installation tolerances shall not exceed the following:

1. Squareness: Plus or minus 1/16 inch (1.6 mm), measured at door rabbet on a line 90 degrees from jamb and perpendicular to frame head.
2. Alignment: Plus or minus 1/16 inch (1.6 mm), measured at jambs on a horizontal line parallel to plane of face.
3. Twist: Plus or minus 1/16 inch (1.6 mm), measured at opposite face corners of jambs on parallel lines, and perpendicular to plane of door rabbet.
4. Plumbness: Plus or minus 1/16 inch (1.6 mm), measured at jambs on a perpendicular line from head to floor.

E. Install fire-rated frames in accordance with NFPA Standard No. 80.

F. Grout fill solid detention hollow metal frame jambs, muntins, sill and head sections. Sill shall be packed solid with mortar before setting of frame. Provide grout openings in detention hollow metal frames where access to fill frames may be restricted due to steel lintels or other obstructions.

G. Touch-up painting of factory finished or factory primed items is the Installer's responsibility.

H. Fill voids between materials of the detention equipment and embeds or other physical construction with low-mod gel, equal to Sikadur 23, by Sika and paint equipment to match surrounding materials.

3.3 ADJUSTMENT AND CLEANING

A. Check and readjust Detention Hollow Metal Doors and Frames just prior to final inspection. Leave work in complete and proper operating condition. Remove and replace defective work, including doors or frames which are warped, bowed or otherwise damaged.

B. Clean equipment thoroughly prior to Substantial Completion.

3.4 PROTECTION

A. Protect equipment and finishes until Substantial Completion.

B. Replace damaged equipment as directed by the Architect.

END OF SECTION 111913

SECTION 111916 – DETENTION ACCESS PANELS

PART 1 - GENERAL

1.1 RELATED DOCUMENTS

A. Drawings and general provisions of the Contract, including General and Supplementary Conditions and Division 01 Specification Sections, apply to this Section.

1.2 SUMMARY

A. Section Includes:

1. Detention access panel (DWAP).

B. Related Requirements:

1. Division 03 Section “Plant-Precast Structural Concrete”
2. Division 03 Section “Plant-Precast Architectural Concrete”
3. Division 04 Section “Unit Masonry Assemblies”
4. Division 05 Section “Metal Fabrications”
5. Division 07 Section “Security Joint Sealants”
6. Division 09 Section “Interior Painting”
7. Division 11 Section “General Provisions for Detention Work”
8. Division 11 Section “Detention Hardware”
9. Division 11 Section “Detention Hollow Metal Wall Panels”
10. Division 11 Section “Detention Metal Ceiling Assemblies”
11. Division 13 Section “Detention Steel Cell Modules”
12. Division 13 Section “Prefabricated Precast Concrete Cell Modules”

1.3 SUBMITTALS

A. Product Data: For each type of product.

1. Include construction details, material descriptions, dimensions of individual components and profiles, and finishes.

1.4 QUALITY ASSURANCE

A. Detention Equipment Contractor (DEC) Qualifications:

1. General: Refer to Section 111900.

B. Provide detention access panels manufactured by a single firm specializing in the production of

this type of work.

1.5 DELIVERY, STORAGE AND HANDLING

A. Deliver, store and handle detention access panels per manufacturer's requirements.

PART 2 - PRODUCTS

2.1 DETENTION ACCESS PANEL (DCAP)

A. Manufacturers: Subject to compliance with requirements, provide products by one of the following:

1. American Jail Products; Troy, NY
2. Maximum Security Products Corp.; Albany, NY
3. Norix Group, Inc.; West Chicago, IL
4. PSI LLC.; Minneapolis, MN
5. PDI; Orange, CA
6. Southern Steel Company; San Antonio, TX
7. Sweeper Metal Fabricators Corp.; Drumright, OK
8. Viking Products; Orange, CA
9. Willo Products; Decatur, AL

B. See floor plans for wall mounted detention access panels. Provide and install ten (10) additional wall mounted detention access panels and ten (10) additional wall mounted fire-rated detention access panels. Provide and install thirty (30) ceiling mounted detention access panels and five (5) ceiling mounted fire-rated detention access panels. Coordinate size and location with the General Contractor.

C. Flush Detention Access Doors and Frames with Exposed Trim:

1. Locations: Wall and Ceiling.
2. Door Size: As indicated on door schedule.
3. Frame: 3 inches by 2 inches by 3/16 inch (76.2 mm by 51 mm by 4.76 mm) steel angles, with 1 inch by 1 inch by 1/8 inch (25.4 mm by 25.4 mm by 3 mm) angle stops on 3 sides.
4. Door: 3/16 inch (4.76 mm) steel with 1-1/4 inches (31.75 mm) flange on all four sides.
5. Hinge: Continuous piano type hinge with top ground at a 45 degree angle.
6. Latch: Equip the panel with one (1) detention mechanical deadbolt lock and escutcheon.

D. Provide mounting holes in frames to attach frames to metal framing in drywall construction and masonry anchors in masonry construction.

E. Provide safety chain on swing-down ceiling type detention access panels.

F. Provide low-mod gel, equal to Sikadur 23 by Sika, around perimeter of angle frame.

G. Assembly shall be provided with one (1) shop coat of primer. Field finish paint by Section

099123, color as selected by Architect. Verify primer compatibility with finish paint as specified in Section 099123.

PART 3 - EXECUTION

3.1 EXAMINATION

A. Examine substrates, areas, and conditions, with Installer present, for compliance with requirements for installation tolerances and other conditions affecting performance of the Work.

B. Examine roughing-in for embedded and built-in anchors to verify actual locations before installation.

C. Notify the General Contractor in writing of conditions detrimental to the proper and timely completion of the work.

D. For the record, prepare written report, endorsed by Installer, listing conditions detrimental to performance of the Work.

E. Proceed with installation only after unsatisfactory conditions have been corrected.

3.2 INSTALLATION

A. Expenses carried by the Architect/Engineer, Project Manager or Owner in troubleshooting equipment problems caused by inadequate workmanship or other form of poor performance on the part of the Contractor, shall be borne by the Contractor.

B. Comply with manufacturer's printed installation instructions.

C. Touch-up painting of factory finished or factory primed items is the Installer's responsibility.

D. Fill voids between materials of the detention equipment and other physical construction with low-mod gel, equal to Sikadur 23, by Sika and paint equipment to match surrounding materials.

3.3 ADJUSTING

A. Adjust doors and hardware, after installation, for proper operation.

3.4 CLEANING

A. Clean equipment thoroughly prior to Substantial Completion.

3.5 PROTECTION

A. Protect equipment and finishes until Substantial Completion.

B. Replace damaged equipment as directed by the Architect.

END OF SECTION 111916

SECTION 111923 – DETENTION HARDWARE

PART 1 - GENERAL

1.1 RELATED DOCUMENTS

A. Drawings and general provisions of the Contract, including General and Supplementary Conditions and Division 01 Specification Sections, apply to this Section.

1.2 SUMMARY

A. Section Includes:

1. Detention hinges.
2. Detention electric locks.
3. Detention mechanical locks.
4. Closers.
5. Position switches.
6. Door accessories.

B. Related Requirements:

1. Division 05 Section “Tamper Proof Metal Fasteners”
2. Division 11 Section “General Provisions for Detention Work”
3. Division 11 Section “Detention Hollow Metal Doors and Frames”
4. Division 11 Section “Detention Access Panels”
5. Division 11 Section “Detention Sliding Door Locks Devices”
6. Division 11 Section “Pneumatic Air Locking System”
7. Division 11 Section “Detention Furnishings and Equipment”
8. Division 11 Section “Detention Enclosures”
9. Division 11 Section “Detention Hollow Metal Wall Panels”
10. Division 11 Section “Detention Metal Ceiling Assemblies”
11. Division 13 Section “Detention Steel Cell Modules”
12. Division 13 Section “Prefabricated Precast Concrete Cell Modules”
13. Division 26 for Electrical
14. Division 27 for Communications
15. Division 28 for Electronic Safety and Security

1.3 PERFORMANCE REQUIREMENTS

A. Swinging Detention Door Assemblies: Provide detention door hardware as part of a detention door assembly that complies with security grade indicated, when tested according to ASTM F 1450, based on testing manufacturer's standard units in assemblies similar to those indicated for this Project.

1.4 SUBMITTALS

A. Product Data: For each type of product.

1. Include construction details, material descriptions, dimensions of individual components and profiles, and finishes for each type of detention door hardware.

B. Shop Drawings: For each type of detention door hardware. Include openings by door number and location, manufacturer's names, catalog numbers, keying information, materials, and finish. The Architect/Engineer's approval of schedule will not relieve Contractor or Supplier of responsibility for errors or omissions which it might contain.

C. Certification by Manufacturer: That products supplied complies with performance requirements specified.

D. Qualification Data: For Installer.

E. Product Test Reports: Showing compliance with specified requirements.

F. Maintenance Data: For each type of detention door hardware to include in maintenance manuals.

G. Warranties: Special warranties specified in this Section.

H. Detention Keying Schedule: Coordinate a Detention Keying Meeting with the Architect, User, and hardware supplier so as not to delay the manufacturer and delivery of the required detention locks. Submit keying system schedule after signed approval by User.

1.5 QUALITY ASSURANCE

A. Detention Equipment Contractor (DEC) Qualifications:

1. General: Refer to Section 111900.

B. Installation and maintenance of the detention hardware shall be performed by manufacturer approved personnel. Submit certification of manufacturer training with shop drawings.

1.6 JOB CONDITIONS

A. Detention Hardware Coordination Conference:

1. A coordination conference will be held and coordinated by the General Contractor after submittals of schedules and shop drawings.
2. Participants: A qualified representative of each of the following parties will attend the conference:

a. Owner
b. Project Manager
c. Architect/Engineer

d. General Contractor
e. Detention Equipment Contractor
f. Electrical Contractor
g. Detention Hollow Metal Work Supplier
h. Detention Hollow Metal Work Installer
i. Detention Hardware Supplier
j. Detention Hardware Installer

3. Bid Package Contractor shall take minutes of the hardware coordination conference.

1.7 DELIVERY, STORAGE AND HANDLING

A. Deliver, store and handle detention hardware per manufacturer's requirements.

B. Delivery: Deliver items in manufacturer's original package. Each item individually packaged and carefully marked for intended opening and use. Each item complete with all necessary screws, bolts, keys, instructions, and where necessary, installation templates.

C. Storage: Store off floor in dry area of building out of way of other work in progress. Provide maximum protection against loss and damage.

D. Handling: Handle items in a manner to prevent damage. Marred, defaced, damaged and defective items will be rejected.

1.8 WARRANTY

A. General Warranty: The special warranty specified in this Article shall not deprive the Owner of other rights the Owner may have under other provisions of the Contract Documents and shall be in addition to, and run concurrent with, other warranties made by the Contractor under requirements of the Contract Documents.

B. Special Warranty: Submit a written warranty executed by the manufacturer and installer agreeing to repair or replace materials furnished under this Section that fail in materials or workmanship within the specified warranty period. Submit the warranty to the Architect for approval. The spare part provided to the Owner in the original inventory shall be maintained during the warranty period. Components used for repair shall be replaced immediately and the Owner shall not be charged for shipping or other costs unless failure is due to abuse or negligence.

C. Warranty Period: Two (2) years from date of Substantial Completion.

1.9 MAINTENANCE SERVICE

A. Maintenance Manual: Furnish a bound complete set of maintenance instructions as needed for Owner's continued adjustment, maintenance, repair, and removal and replacement of detention door hardware.

B. Training: Provide on-site review of Operational and Maintenance manuals and spare parts with the Owner's designated personnel. Provide sixteen hours of training on repair and maintenance of the detention door hardware.

1. Provide a professionally produced video tape on the repair and maintenance of the detention door hardware.

C. Initial Maintenance Service: Beginning at Substantial Completion, provide at six (6) month intervals (coordinate exact time with the User) per year for the basic warranty period full maintenance by skilled employees of detention door hardware Installer. Include preventive maintenance, repair or replacement of worn or defective components, lubrication, cleaning, and adjusting as required for proper detention door hardware operation. Provide parts and supplies as used in the manufacture and installation of original products.

PART 2 - PRODUCTS

2.1 MANUFACTURER

A. Catalog numbers of the manufacturers listed have been used to establish the quality required. The only other manufacturers approved are listed. Other manufacturers seeking approval shall do so in writing per General Requirements and shall list exact catalog numbers and description of the items he proposes to furnish.

B. DESIGNATIONS: Following abbreviations identify listed hardware manufacturers.

Airteq	Airteq Systems; Lake Oswego, OR
Glynn-Johnson	Glynn-Johnson Corp.; Indianapolis, IN
Hiawatha	Hiawatha Metalcraft, Inc.; Minneapolis, MN
Ives	H.B. Ives Div.; New Haven, CT
LCN	LCN Closers; Princeton, IL
Norton	Norton Closer Div.; Charlotte, NC
Pemko	Pemko Mfg. Co.; Emeryville, CA
Reese	Reese Enterprises; Rosemount, MN
Southern Folger	Southern Folger; San Antonio, TX
Zero	Zero Weatherstripping; Bronx, NY

2.2 DETENTION DOOR HARDWARE, GENERAL

A. Provide detention hardware manufactured by a single firm specializing in the production of this type of work.

B. Provide detention door hardware with features, functions, and internal equipment required to perform control and monitoring functions indicated in Division 28 for Electronic Safety and

Security.

C. Regulatory Requirements:

1. Fire-Rated Detention Door Assemblies: Provide detention door hardware for assemblies complying with NFPA 80 that are listed and labeled by a qualified testing agency, for fire-protection ratings indicated.

2.3 DETENTION HINGES

A. Food-Pass Detention Hinges:

1. Series/Manufacturer:

a. 603FP/Airteq
b. 203FP/Southern Steel

2. Heavy weight, plain bearing; fabricated from cast iron or steel; 1/2 inch (12.7 mm) diameter, case-hardened, fully welded, steel hinge pin; with applied stop preventing door from opening more than 90 degrees and supporting door in horizontal position as a shelf; full surface.

B. Heavy Duty, 4 1/2 FM:

1. Series/Manufacturer:

a. 604FMCS/Airteq
b. 204FMSS/Southern Steel

2. 4-1/2 inches by 4-1/2 inches (114.3 mm by 114.3 mm), 3/16 inch (4.7 mm) thick leaves.
3. Cast stainless steel leaves with integral security studs, non-removable stainless steel pins, stainless steel ball bearings, three knuckle with "HT" hospital tips.
4. Provide quantities as follows:

a. Doors less than 5 feet (1.524 meter) high provide 1 Pair.
b. Doors over 5 feet to 7 feet 6 inches (1.524 meter to 2.286 meter) provide 1-1/2 Pair.
c. Doors over 7 feet 6 inches to 10 feet (2.286 meter to 3.048 meter) provide 2 Pair.
d. Doors over 3 feet (914.4 mm) wide provide 2 Pair.

2.4 DETENTION ELECTRIC LOCKS

A. Maximum Security - Electrical Operation:

1. Series/Manufacturer:

a. 9912SxRLB/Airteq
b. 10120AE/Southern Steel

2. Frame mounted, 120VAC continuous duty solenoid operated.
3. Bolt is retracted manually by mogul key on outside and/or inside.
4. See Detention Hardware Schedule for keying and function.
5. Internal switches monitor status of bolt to show deadlocked and unlocked conditions.
6. Provide galvanized case at exterior installations.
7. Provide a key cylinder extension for locks keyed both sides or keyed stop side.

B. Maximum Security - Motor Operation:

1. Series/Manufacturer:

   a. 9912MxRLB/Airteq
   b. 10120AM/Southern Steel

2. Frame mounted, 24 VDC, motor operated.
3. Bolt is retracted manually by mogul key on outside and/or inside.
4. See Detention Hardware Schedule for keying and functions.
5. Internal switches monitor status of bolt to show deadlocked and unlocked conditions.
6. Provide a key cylinder extension for locks keyed both sides or keyed stop side.

2.5 DETENTION MECHANICAL LOCKS

A. Maximum Security - Mechanical Operation: (Food/cuff pass)

1. Series/Manufacturer:

   a. 5010/Airteq
   b. 1010A/Southern Folger

2. Door mounted deadbolt.
3. Bolt is retracted manually by paracentric key on outside only.
4. Provide strike as scheduled.
5. Provide with hollow metal lock mounting, escutcheon and security screws.

B. Medium Security - Mechanical Operation:

1. Series/Acceptable Manufacturer:

   a. 90000/92000 Series/Airteq
   b. 10500/Southern Folger

2. Install mortise in door.
3. Mogul cylinders.
4. See Detention Hardware Schedule for lock function.
5. Provide strike as required by lock type.

2.6 CLOSERS

A. Manufacturers:

1. Norton
2. Yale
3. LCN

B. Concealed Door Closer:

1. Overhead concealed door closers shall be one manufacturer and carry a two year warranty.
2. A factory representative shall inspect closers after installation to insure proper adjustment and operation.
3. Closers shall have full hydraulic, rack and pinion action with high strength cast iron cylinder.
4. Spring power shall be adjustable. Spring power shall provide an opening force range of 8 to 15 pounds from 0 degrees to 90 degrees.
5. Closers shall have separate adjustments for latch speed, general speed and back check.
6. Closers shall have an integral electro-mechanical device rated not less than 24 VAC @ 10 amperes to detect and signal rotation of the closer pinion.
7. Adjustments screws shall be accessible through a heavy duty mounting plate when finish plates are removed.
8. Closers shall be field adjustable to allow precise setting for each door and fitted with a protective shield.
9. Install of the finish plate shall fully conceal all adjustment mechanisms.
10. Closers shall have an extra heavy duty, forged steel concealed arm.
11. The low friction track roller shall be attached to the arm by a threaded mounting.
12. Closers shall have a metal track designed to prevent jamming and to eject foreign objects place in the track mortised into the top of the door.
13. Provide brackets, spacer blocks and any accessory required to insure proper installation.
14. Attach with stainless steel security screws.

2.7 POSITION SWITCHES

1. Manufacturer:

   a. DPS6200/Airteq
   b. 200MRS/Southern Folger

2. Mortise installation overhead mounting with switch contacts housed in the door frame and actuating magnet mortised into the top of the door.
3. Adjust switch for minimum movement to activate.
4. Locate position switches in frame head, six inches (152 mm), center of switch, from lock edge of door.
5. Fasteners shall be torx-head (star design with center pin) security fasteners.

B. Keeper Switches:

1. Manufacturer:

a. Airteq
b. Brink
c. Southern Folger

2. SPDT limit monitoring switch, rating 10 amps at 120 VAC.
3. All manual locks shall utilize keeper switches.
4. Fasteners shall be torx-head (star design with center pin) security fasteners.

2.8 DOOR ACCESSORIES

A. Push-Pull Plates:

1. Series/Manufacturer:

a. 120L Hagar

2. 0.125 inch (3.175 mm) thick stainless steel.
3. 3-1/4 inches wide by 15-3/4 inches high (82.55 mm wide by 400 mm high) with 7/8 inch (22.2 mm) lip projection at bottom.
4. Attach with stainless steel security screws.

B. Pull - Loop:

1. Series/Manufacturer:

a. 612/Airteq
b. 212/Southern steel

2. Cast bronze, satin chrome plated.
3. 8-3/4 inches (222 mm) overall length and 2-1/4 inches (57 mm) projection.
4. Fasteners shall be torx-head (star design with center pin) security fasteners.

C. Pull - Flush:

1. Series/Manufacturer:

a. 614/Airteq
b. 214/Southern Folger

2. Cast bronze, satin chrome plated.
3. 5 inches high by 4 inches wide by 1 inch deep (127 mm high by 102 mm wide by 25 mm deep), with 1/8 inch (3 mm) thick faceplate.
4. Fasteners shall be torx-head (star design with center pin) security fasteners.

D. Door Stops:

1. Black silicone rubber bumper 2 inches (50.8 mm) diameter, mounted on a 5/8 inch by 2.5 inches (15.875 mm by 63.5 mm) steel shank for permanent attachment in grout filled masonry or concrete.

E. Thresholds:

1. Manufacturer:

   a. Pemko
   b. Reese
   c. National

2. Fasteners shall be stainless steel torx-head (star design with center pin) security fasteners with expansion anchors.
3. Provide with door bottom shoe.

F. Weatherstripping/Smoke Seals:

1. Model/Manufacturer:

   a. P88 perforated
   b. Reese
   c. /National

2. Extruded neoprene seal with ligature resistant perforations.
3. Self adhesive

G. Automatic Door Bottom:

1. Model/Manufacturer:

   a. 4131/Pemko

2. Surface mounted type, clear anodized aluminum, cam-actuated drop-down vinyl seal, with spring mechanism return. Only for use on stop side of door.
3. Secured with stainless steel, torx-head (star design with center pin) security screws.

H. Kick Plates:

1. See drawings for height high by door width with allowance for frame stops.
2. BHMA A156.6; fabricated from 0.050 inch (1.3 mm) thick stainless steel; with manufacturer's standard self-tapping screw fasteners.

I. Head Drip:

1. Model/Manufacturer:

   a. R201/Reese

2. Extruded clear anodized aluminum.
3. Secured with stainless steel, torx-head (star design with center pin) security screws.
4. All exterior doors shall have head drips, whether or not scheduled.

2.9 FINISHES

	US Symbol	ANSI Symbol	Description
Hinges	US32D	630	Satin Stainless Steel
Locks & Pulls	US26D	626	Satin Chrome
Closers	AL	689	Aluminum Painted
Push & Kick plates	US32D	630	Satin Stainless Steel
Strike Plates	US32D	630	Satin Stainless Steel

2.10 CYLINDERS, KEYS AND KEYING

A. The detention locks will incorporate two (2) separate keying systems; one for lever tumbler (Paracentric) and one for pin tumbler (mogul cylinder) locks. Each keying system's keys shall be dye stamped for identification; corresponding to the Detention Equipment Contractor's final schematic keying chart.

B. Lever tumbler (paracentric keyed) locks shall be keyed alike or different as directed. Provide cut keys as required.

C. Pin tumbler, Prison Mogul cylinder locks shall be master keyed as directed. Provide cut change keys, and master keys as required.

D. For each individual key cabinet location, provide the following key quantities:

1. For all individual key designations, there shall be three (3) keys each.
2. For each Master Key designation (A, B, etc.), there shall be five (5) keys each.

E. A complete, detailed schematic chart of the keying system will be required. The Detention Equipment Contractor will also be required to enter the key symbols for all doors on additional floor plans which will be supplied by the Architect. Two (2) copies of the schematic keying chart and architectural floor plans shall be turned over to the user at the completion of the project. The cost for this service shall be included with the cost of materials at the time of bidding.

F. The key schedule is confidential information known only to the Institution, Architect, and lock manufacturer. The Architect shall arrange to meet with the Institution to determine the keying schedule. The lock manufacturer shall deliver keys directly to the Institution (signature required), and provide confirmation of delivery to the Contractor.

G. Keys shall not leave the manufacturer's custody without prior arrangements for delivery and authorization from the Owner.

2.11 KEY CONTROL

A. Key control system shall be furnished with a capacity of 1.75 times the number of individual key designations and shall be a complete dual tag system.

B. Cabinet shall have concealed type hinge and rounded sides.

C. Panels must have individual hook and label pockets formed as an integral part of the panel, for both paracentric and mogul key types, as required.

D. Tags of two types shall be provided, one set for permanent attachment of file key without the use of tools and the other set with snaphook holding at least four keys.

E. Indexing shall be provided to record information concerning locks and keys alphabetically.

F. Permanent Loan Registry shall be furnished to protect identity of key borrowers while Receipt Tabs shall be supplied for temporary loan.

G. Provide key cabinets as follows:

1. Booking post

a. Permanent Storage - Telkee Aristocrat

2.12 DETENTION EQUIPMENT ACCESSORIES

A. Provide accessories, anchorage inserts and security fasteners for a complete, tamperproof installation.

B. Exposed Security Fasteners:

1. Provide torx-head (star design with center pin) security fasteners for anchoring work in exposed detention areas. Comply with specification section 050553.
2. Finish shall match that specified of the item anchored.

PART 3 - EXECUTION

3.1 EXAMINATION

A. Examine substrates, areas, and conditions, with Installer present, for compliance with requirements for installation tolerances and other conditions affecting performance of the Work.

B. Examine roughing-in for electrical power systems to verify actual locations of wiring connections before installation.

C. Notify the General Contractor in writing of conditions detrimental to the proper and timely completion of the work.

D. For the record, prepare written report, endorsed by Installer, listing conditions detrimental to performance of the Work.

E. Proceed with installation only after unsatisfactory conditions have been corrected.

3.2 INSTALLATION

A. Expenses carried by the Architect/Engineer, Project Manager or Owner in troubleshooting equipment problems caused by inadequate workmanship or other form of poor performance on the part of the Contractor, shall be borne by the Contractor.

B. Install Detention Hardware in accordance with shop drawings, manufacturer's written installation instructions, and as herein specified.

C. Installation shall be under supervision of manufacturer approved personnel.

D. Mounting Heights: Heights given are center line heights up from finish floor unless stated; heights given "Number to Number" indicate that all shall be at one height within limits given. Where heights of items are not listed, mount in accord with recommendations of DHI.

1.	Bottom hinge	10 to 13 inches (254 to 330 mm)
2.	Top hinge	6 to 8 inches (152 to 203 mm) down from head
3.	Intermediate hinges	Equally spaced
4.	Detention lock	40 inches (1016 mm) to centerline of lockbolt
5.	Door pull	42 inches (1066 mm) to centerline of grip
6.	Flush pull	42 inches (1066 mm) to centerline of grip
7.	Push plate	46 inches (1168 mm) to centerline of plate

E. Fitting: Fit hardware accurately and properly. Remove exposed parts until after painter's finishing is completed, then reinstall. Securely fasten all fixed parts. Fit faces of mortised parts snug and flush. Make sure operating parts move freely and smoothly without binding, sticking or excessive clearance.

F. Adjusting and Finishing: After work has been otherwise completed, examine hardware for complete and proper installation. Lubricate bearing surfaces of moving parts. Adjust latching and holding devices to proper function. Adjust door control devices to proper speed and power. Test keys for conformance to approved keying system. Clean exposed surfaces, check for surface damage and polish.

G. Thresholds: Install in one continuous piece, full width of opening. Set in full bed of mastic and fasten with countersunk anchors at 6 inches (152 mm) on center.

3.3 DEFECTIVE WORK

A. Where hardware is found defective in materials or installation; rework, restore, replace or otherwise correct as directed.

B. Following will be considered as defective materials:

1. Unauthorized substitutes.
2. Items delivered with missing, broken, damaged or defaced parts.
3. Items of incorrect hand or function.

C. Following will be considered as defective installation:

1. Items broken, damaged, or defaced after delivery.

2. Items incomplete, misaligned or incorrectly located.

3.4 SPARE PARTS

A. Shall be provided for the Owners' stock as follows:

1. 2 min. or 5% of each different lock type including cylinders.
2. 2 min. or 5% of each type Swing door Position Switches
3. 2 min. or 5% of Keeper Switches
4. 2 min. or 5% of repair parts kit for each lock type, containing: Springs, micro switches, screws, nuts, washers and miscellaneous parts.

3.5 HARDWARE SCHEDULE (swinging doors)

A. Provide hardware, conforming to Project Specifications as scheduled on drawings:

B. Where the term ”as specified” occurs in the hardware sets, see Part 2 of the main body of the specification for definition of that item.

C. Lock model numbers used in the following sets are Southern Steel as basis of design and to provide the required functions for the door.

SET: 157	
MORTISE LOCK:	**10508**
HINGES	**AS SPECIFIED**
CLOSER	**NONE**
PULLS	**NONE**
GASKETING (SOUND)	**AS SPECIFIED**
THRESHOLD (SOUND)	**AS SPECIFIED**

SET: 159A	
MAXIMUM SEC LOCK:	**10120AM-2 (FULL CYCLE)**
HINGES	**AS SPECIFIED**
CLOSER	**AS SPECIFIED**
PULL STOP SIDE	**LOOP**
PULL HINGE SIDE	**LOOP**
GASKETING	**NONE**
THRESHOLD	**NONE**
SILENCERS	**AS SPECIFIED**
DOOR POSITION SWITCH	**AS SPECIFIED**

SET: 159B	
MAXIMUM SEC LOCK:	**10120AM-2 (FULL CYCLE)**
HINGES	**AS SPECIFIED**
CLOSER	**AS SPECIFIED**

PULL STOP SIDE	**LOOP**
PULL HINGE SIDE	**LOOP**
GASKETING (FR)	**AS SPECIFIED**
THRESHOLD (FR)	**AS SPECIFIED**
SILENCERS	**NONE**
DOOR POSITION SWITCH	**AS SPECIFIED**

SET: 159C

MAXIMUM SEC LOCK:	**10120AM-2 (FULL CYCLE)**
HINGES	**AS SPECIFIED**
CLOSER	**AS SPECIFIED**
PULL STOP SIDE	**LOOP**
PULL HINGE SIDE	**LOOP**
GASKETING (EXTERIOR)	**AS SPECIFIED**
THRESHOLD (EXTERIOR)	**AS SPECIFIED**
SILENCERS	**NONE**
DOOR POSITION SWITCH	**AS SPECIFIED**

SET: 160

MAXIMUM SEC LOCK:	**10120AM-2 (FULL CYCLE)**
HINGES	**AS SPECIFIED**
CLOSER	**AS SPECIFIED**
PULL STOP SIDE	**LOOP**
PULL HINGE SIDE	**LOOP**
GASKETING (EXTERIOR)	**AS SPECIFIED**
THRESHOLD (EXTERIOR)	**AS SPECIFIED**
SILENCERS	**NONE**
DOOR POSITION SWITCH	**AS SPECIFIED**

END OF SECTION 111923

SECTION 11 19 26 - DETENTION SLIDING DOOR LOCKING DEVICES

PART 1 - GENERAL

1.1 RELATED DOCUMENTS

A. Drawings and general provisions of the Contract, including General and Supplementary Conditions and Division 01 Specification Sections, apply to this Section.

1.2 SUMMARY

A. Section Includes:

1. Electromechanical-locking, electromechanical-door-movement, sliding door device assemblies.

B. Related Requirements:

1. Division 05 Section “Metal Fabrications”
2. Division 05 Section “Tamper Proof Metal Fasteners”
3. Division 07 Section “Security Joint Sealants”
4. Division 09 Section “Painting”
5. Division 11 Section “General Provisions for Detention work”
6. Division 11 Section “Detention Hollow Metal Doors and Frames”
7. Division 11 Section “Detention Hardware”
8. Division 26 for Electrical
9. Division 27 for Communications
10. Division 28 for Electronic Safety and Security

1.3 SUBMITTALS

A. Product Data: For each type of product.

1. Include construction details, material descriptions, dimensions of individual

components and profiles for each type of detention sliding door locking device.

B. Shop Drawings: For each type of detention sliding door locking device. Include openings by door number and location, catalog numbers, keying information, materials, elevations, dimensioned construction details, opening conditions, and installation requirements of reinforcement, and connections to detention hollow metal doors. The Architect/Engineer's approval of schedule will not relieve Contractor or Supplier of responsibility for errors or omissions which it might contain.

C. Certification by Manufacturer: That products supplied complies with performance requirements specified.

D. Qualification Data: For Installer.

E. Product Test Reports: Showing compliance with specified requirements.

F. Maintenance Data: For each type of detention door hardware to include in maintenance manuals.

G. Warranties: Special warranties specified in this Section.

H. Detention Keying Schedule: Coordinate a Detention Keying meeting with the Architect, User, and hardware supplier so as not to delay the manufacturer and delivery of the required detention locks. Submit keying system schedule after signed approval by User.

1.4 QUALITY ASSURANCE

A. Detention Equipment Contractor (DEC) Qualifications

1. General: Refer to Section 11 19 00.

B. Provide detention sliding door locking devices manufactured by a single firm specializing in the production of this type of work.

C. Installation and maintenance of the detention sliding door locking devices shall be performed by manufacturer approved personnel. Submit certification of manufacturer training with shop drawings.

1.5 DELIVERY, STORAGE AND HANDLING

A. Deliver, store and handle detention sliding door locking devices per manufacturer's requirements.

B. Delivery: Deliver items in manufacturer's original package. Each item individually packaged and carefully marked for intended opening and use. Each item complete with necessary screws, bolts, keys, instructions, and where necessary, installation templates.

C. Storage: Store off floor in dry area of building out of way of other work in progress. Provide maximum protection against loss and damage.

D. Handling: Handle items in a manner to prevent damage. Marred, defaced, damaged and defective items will be rejected.

1.6 COORDINATION

A. Electrical System Roughing-in: Coordinate layout and installation of electrified detention sliding door locking devices with connections to power supplies and detention monitoring and control system.

1.7 WARRANTY

A. General Warranty: The special warranty specified in this Article shall not deprive the Owner of other rights the Owner may have under other provisions of the Contract Documents and shall be in addition to, and run concurrent with, other warranties made by the Contractor under requirements of the Contract Documents.

B. Special Warranty: Submit a written warranty executed by the manufacturer and installer agreeing to repair or replace materials furnished under this Section that fail in materials or workmanship within the specified warranty period. Submit the warranty to the Architect for approval. The spare part provided to the Owner in the original inventory shall be maintained during the warranty period. Components used for repair shall be replaced immediately and the Owner shall not be charged for shipping or other costs unless failure is due to abuse or negligence.

C. Warranty Period: Two (2) years from date of Substantial Completion.

1.8 MAINTENANCE SERVICE

A. Maintenance Manual: Furnish a bound complete set of maintenance instructions as needed for Owner's continued adjustment, maintenance, repair, and removal and replacement of detention sliding door locking devices.

B. Training: Provide on-site review of Operational and Maintenance manuals and spare parts with the Owner's designated personnel. Provide sixteen hours of training on repair and maintenance of the detention sliding door locking devices.

1. Provide a professionally produced video tape on the repair and maintenance of the detention sliding door locking devices.

C. Initial Maintenance Service: Beginning at Substantial Completion, provide at six (6) month intervals (coordinate exact time with the User) per year for the basic warranty period full maintenance by skilled employees of detention sliding door locking devices Installer. Include preventive maintenance, repair or replacement of worn or defective components, lubrication, cleaning, and adjusting as required for proper detention sliding door locking device operation. Provide parts and supplies as used in the manufacture and installation of original products.

PART 2 - PRODUCTS

2.1 SLIDING DETENTION DOOR DEVICE ASSEMBLIES, GENERAL

A. Performance Requirements: Provide sliding detention door device assemblies, including locking device, receiver, overhead door hanger, bottom door guide, lock column, and enclosure, as a complete assembly, complying with Grade 1 according to ASTM F 1643, as determined by testing manufacturers' standard units representing those indicated for this Project.

B. Assembly Construction: As follows:

1. Enclosure: Fabricated from 0.167 inch (4.2 mm) thick steel plate, with 0.123 inch (3.1 mm) thick, steel hinged cover. Baffle openings in enclosure. Provide closures for ends of housings.

   a. Provide sloping-top housings. Flat-top housings may be provided for operators mounted touching ceiling.

2. Lock Column: Vertical tube enclosure fabricated from 0.123 inch (3.1 mm) thick steel, providing mechanical locking control of detention sliding door at door location; operated by paracentric key. Doors shall be capable of being locked at top and bottom, at rear of door, in both open and closed positions, with no components projecting into door opening.

3. Receiver: Fabricated from 0.123 inch (3.1 mm) thick steel plate.

4. Hanger Assembly: Extend steel carrier full width of door and door travel required for clear door opening. Provide antifriction ball-bearing steel rollers with hardened members and grease shield.

5. Finish: Factory prime painted.

2.2 ELECTROMECHANICAL-LOCKING, MANUAL-DOOR-MOVEMENT, SLIDING DOOR DEVICE ASSEMBLIES

A. Operated from card readers or remote buttons that activate electric motor to unlock sliding doors. Doors spring open a small distance after unlocking and are manually opened and closed. Locks automatically deadlock when doors are moved to fully closed position. Door does not lock to fully open position. Provide factory-wired cable harness with plug connectors for each motor unit.

1. Single-Door Function: Provide with one sided release pilaster for manual unlocking in emergency or if power fails.

2. 24VDC motor

3. Products:

a. Southern Folger; Model 4110L series basis of design.

b. Airteq

c. Folger Adam.

2.3 DETENTION EQUIPMENT ACCESSORIES

A. Provide accessories, anchorage inserts and security fasteners for a complete, tamper-proof installation.

B. Exposed Security Fasteners:

1. Provide torx-head (star design with center pin) security fasteners for anchoring work in exposed detention areas. Comply with specification section 05 05 53.

2. Finish shall match that specified of the item anchored.

PART 3 - EXECUTION

3.1 EXAMINATION

A. Examine substrates, areas, and conditions, with Installer present, for compliance with requirements for installation tolerances and other conditions affecting performance of the Work.

B. Examine roughing-in for electrical power systems to verify actual locations of wiring connections before installation.

C. Notify the General Contractor in writing of conditions detrimental to the proper and timely completion of the work.

D. For the record, prepare written report, endorsed by Installer, listing conditions detrimental to performance of the Work.

E. Proceed with installation only after unsatisfactory conditions have been corrected.

3.2 INSTALLATION

A. Expenses carried by the Architect/Engineer, Project Manager or Owner in troubleshooting equipment problems caused by inadequate workmanship or other form of poor performance on the part of the Contractor, shall be borne by the Contractor.

B. Install detention sliding door locking devices in accordance with shop drawings and manufacturer's written installation instructions for proper functioning of sliding door devices.

C. Installation shall be under full time supervision of manufacturer approved personnel.

D. Touch-up painting of factory finished or factory primed items is the Installer's responsibility.

E. Fill voids between materials of the detention equipment and embeds or other physical construction with low-mod gel, equal to Sikadur 23, by Sika and paint equipment to match surrounding materials.

3.3 ADJUSTMENT AND CLEANING

A. Check and readjust doors and devices just prior to final inspection. Leave work in complete and proper operating condition. Remove and replace defective work.

B. Clean equipment thoroughly prior to Substantial Completion.

3.4 PROTECTION:

A. Protect equipment and finishes until Substantial Completion.

B. Replace damaged equipment as directed by the Architect.

3.5 SPARE PARTS

A. Shall be provided for the Owners' stock as follows:

1. Two complete repair parts kit for sliding door locking device, containing: Springs, micro-switches, screws, nuts, fittings, washers and miscellaneous hardware.

HARDWARE SETS

SET: CELL

LOCKING DEVICE:	4110LP-1 x NLO x 24VDC
PULL STOP SIDE:	FLUSH SOUTHERN STEEL214S OR EQUAL
PULL OUTSIDE:	LOOP SOUTHERN STEEL 212C OR EQUAL
FOOD PASS HINGE	SOUTHERN STEEL 203FP OR EQUAL
FOOD PASS LOCK	SOUTHERN STEEL 1010A OR EQUAL

END OF SECTION 11 19 26

SECTION 111933 – DETENTION GLASS AND GLAZING

PART 1 - GENERAL

1.1 RELATED DOCUMENTS

A. Drawings and general provisions of the Contract, including General and Supplementary Conditions and Division 01 Specification Sections, apply to this Section.

1.2 SUMMARY

A. Section Includes:

1. DETENTION GLAZING
2. Glazing accessories.

B. Related Requirements:

1. Division 11 Section “General Provisions for Detention Work”
2. Division 11 Section “Detention Hollow Metal Doors and Frames”

1.3 REFERENCE STANDARDS

A. American Society for Testing and Materials (ASTM):

1. ASTM F1915: Standard Test Methods for Glazing for Detention Facilities

B. National Institute of Justice (NIJ):

1. NIJ - 0108.01: Ballistic Resistant Protective Materials

C. Federal Specifications (FS):

1. FS TT-S-230A: Sealing Compound, Synthetic rubber base, single component, chemically curing for caulking, sealing and glazing in building construction.
2. FS TT-S-002303: Sealing compound, Elastomeric type, single component (for caulking, sealing, and glazing in buildings and other structures.
3. FS MIL-P46144: Polycarbonate and plastic sheet standards.

D. Flat Glass Marketing Association (FGMA):

1. FGMA: Glazing Manual
2. FGMA: Sealant Manual

E. National Fire Protection Association (NFPA):

1. NFPA 80 Standard for fire Doors and Other Opening Protectives

1.4 SUBMITTALS

A. Product Data: For each security glazing type and glazing material. Include type of materials, thickness, method of test and performance.

B. Samples:

1. Submit two (1), 12 inch (300 mm) square samples of each type of glass required.
2. Submit three (1), 12 inch (300 mm) long samples of each type of glazing sealant and gasket required.
3. Submit samples of interior applied, tinted "films" being considered for glazing.
4. Provide full size sample of glazing type and glazing materials for the detention window sample. Coordinate size and requirements with the detention window manufacturer.

C. Certification by Manufacturer: That products supplied complies with performance requirements specified.

D. Product Test Reports: Showing compliance with specified requirements.

E. Maintenance Data: Covering cleaning and protection requirements.

F. Warranties: Special warranties specified in this Section.

1.5 QUALITY ASSURANCE

A. Detention Equipment Contractor (DEC) Qualifications:

1. General: Refer to Section 11 19 00.

B. Manufacturer Qualifications: Company specializing in the manufacture of security glass, types as specified, with minimum documented five (5) years of experience.

C. Installer Qualifications: Engage an experienced Installer who has specialized in installing security glazing similar to that required for this Project.

D. Certified Safety Glazing: Category II products complying with test requirements of 16 CFR 1201 and ANSI Z97.1, certified by Safety Glazing Certification Council, and permanently labeled.

E. Forced-Entry Resistant Performance: Provide products identical to those tested for compliance with requirements indicated per tests specified for specific glazing types.

1. Have tests performed by qualified independent testing agency.
2. Testing Agencies: Subject to compliance with requirements, acceptable testing agencies are:

a. HP White Laboratories, Inc.
b. Warnock-Hersey International
c. Wiss, Janney, Elstner Associates, Inc.
d. Underwriters Laboratories, Inc.

F. Test data shall have been performed within the past five (5) years and shall be submitted with the shop drawing submittal.

1.6 DELIVERY, STORAGE AND HANDLING

A. Protect glazing materials according to manufacturer's written instructions and as needed to prevent damage to glazing materials from condensation, temperature changes, direct exposure to sun, or other causes.

1.7 PROJECT CONDITIONS

A. Environmental Limitations: Do not proceed with glazing when ambient and substrate temperature conditions are outside limits permitted by glazing material manufacturers and when glazing channel substrates are wet from rain, frost, condensation, or other causes.

1.8 WARRANTY

A. General Warranty: The special warranty specified in this Article shall not deprive the Owner of other rights the Owner may have under other provisions of the Contract Documents and shall be in addition to, and run concurrent with, other warranties made by the Contractor under requirements of the Contract Documents.

B. Special Warranty: Manufacturer's standard form, made out to Owner and signed by manufacturer, in which manufacturer agrees to furnish replacements for units that deteriorate from normal use by developing defects attributable to the manufacturing process, within warranty period.

C. Warranty Period: Five (5) year from date of Substantial Completion.

PART 2 - PRODUCTS

2.1 MANUFACTURERS

A. Manufacturers: Subject to compliance with requirements, provide products by one of the following:

1. Isoclima/Global Security Glazing
2. Insulgard Corporation
3. LTI Smart Glass, Inc.

4. Oldcastle Building Envelope
5. Safti First

2.2 SECURITY GLAZING TYPES

A. Security Glazing Types: Provide types of units fabricated of the glazing products indicated with the security performance specified.

2.3 GLASS-CLAD POLYCARBONATE SECURITY GLAZING SCHEDULE

A. Security Glazing Type SG-6D: Clear glass-clad polycarbonate.

1. Forced-Entry Resistance: ASTM F1915, Security Grade 2.
2. Overall nominal thickness shall be 13/16 inch (20.6375 mm)
3. Inner and outer lites shall be 1/8 inch (3.175 mm) tempered, chemically or heat strengthened float glass with a multiply polycarbonate core.

B. Security Glazing Type SG-7I: Fire rated glass-clad polycarbonate.

1. Forced-Entry Resistance: ASTM F1915 Security Grade 2.
2. Fire Resistance Rated: 90 Minutes.
3. Overall nominal thickness shall be 2-5/16 inch (58.7375 mm).
4. Consisting of; Glass clad polycarbonate-Air Gap-Fire Resistance Glass Laminate. Laminated by layers of special interlayer material.

2.4 GLAZING ACCESSORIES

A. General: Provide products of material, size, and shape complying with referenced glazing standard and requirements of manufacturers of glazing materials for application indicated, and with a proven record of compatibility with surfaces contacted in installation.

B. Cleaners, Primers, and Sealers: Types recommended by sealant or gasket manufacturer.

C. Glazing Tape: Pre-cured, 100 percent solids, butyl polyisobutylene rubber with internal spacer rod, complying with AAMA 807.1 tape, as described in AAMA 800-86.

D. Setting Blocks: Elastomeric material with a Shore A durometer hardness of 85, plus or minus 5.

E. Spacers: Elastomeric blocks or continuous extrusions with a Shore A durometer hardness required by glazing unit manufacturer to maintain glazing units in place for installation indicated.

F. Edge Blocks: Elastomeric material of hardness needed to limit lateral movement (side walking) of glazing units.

G. Backer Rods: Flexible, nonabsorbent, compressible polyurethane foam, either open-cell or non-

gassing closed-cell, unless otherwise restricted by sealant manufacturer; preformed to appropriate size and shape.

H. Glazing Sealant: Black, neutral-curing silicone complying with ASTM C 920, Grade NS, Type S or M, Class 25, Uses NT, A, G, and O as applicable to glazing substrates indicated.

I. Soft Compression Gaskets: Preformed, closed-cell neoprene, complying with ASTM C 509, Type II; shape and density to maintain seal.

1. Color: As selected by the Architect from manufacturer's standard colors.

J. Perimeter Insulation for Fire-Resistive Glazing: Identical to product used in test assembly to obtain fire-resistance rating.

PART 3 - EXECUTION

3.1 EXAMINATION

A. Examine framing for glazing, with Installer present, for compliance with the following:

1. Manufacturing and installation tolerances, including those for size, squareness, and offsets at corners.
2. Presence and functioning of weep system.
3. Minimum required face or edge clearances.
4. Effective sealing between joints of glazing-unit-framing members.
5. Check for conditions that would void the manufacturer's warranty.

B. Proceed with installation only after unsatisfactory conditions have been corrected.

3.2 PREPARATION

A. Clean the glazing channel or other framing members to receive glass immediately before glazing. Remove coatings that are not firmly bonded to the substrate.

3.3 INSTALLATION - GENERAL

A. Expenses carried by the Architect/Engineer, Project Manager and Owner in troubleshooting detention glass and glazing problems, caused by inadequate workmanship or other form of poor performance on the part of a contractor, shall be borne by that Contractor.

B. Comply with combined written instructions of manufacturers of glazing, sealants, gaskets, other glazing materials and tinting film, unless more stringent requirements are indicated, including those in referenced glazing publications.

C. Glazing channel dimensions, as indicated on Drawings or determined by glazing material

thicknesses and by other requirements indicated, provide necessary bite on lites, minimum edge and face clearances, and adequate sealant thicknesses, with reasonable tolerances. Adjust as required by Project conditions during installation.

D. Protect glazing from edge and surface damage during handling and installation. Remove damaged glazing from Project site and legally dispose of off Project site. Damaged glazing are those with edge damage or other imperfections that, when installed, could weaken glazing and impair performance and appearance.

E. Apply primers to joint surfaces where required for adhesion of sealants, as determined by preconstruction sealant-substrate testing.

F. Install setting blocks in sill rabbets, sized and located to comply with referenced glazing publications, unless otherwise required by glazing unit manufacturer. Set blocks in thin course of compatible sealant suitable for heel bead.

G. Do not block weep holes.

H. Do not exceed edge pressures stipulated by glazing unit manufacturers for installing lites.

I. Provide spacers for glazing lites where the length plus width is larger than 50 inches (1270 mm) as follows:

1. Locate spacers directly opposite each other on both inside and outside faces of glazing lites. Install correct size and spacing to preserve required face clearances unless gaskets and glazing tapes are used that have demonstrated ability to maintain required face clearances and to comply with system performance requirements.
2. Provide 1/8 inch (3.175 mm) minimum bite of spacers on glazing lites and use thickness equal to sealant width. With glazing tape, use thickness slightly less than final compressed thickness of tape.

J. Provide edge blocking where indicated or needed to prevent glazing lites from moving sideways in glazing channel, as recommended in writing by glazing unit manufacturer and according to requirements in referenced glazing publications.

K. Set glass lites in each series with uniform pattern, draw, bow, and similar characteristics.

3.4 TAPE GLAZING

A. Position tapes on fixed stops so that, when compressed by glazing units, their exposed edges are flush with sightline of stops.

B. Install tapes continuously. Do not stretch tapes to make them fit opening.

C. Place joints in tapes at corners of opening with adjoining lengths butted together, not lapped. Seal joints in tapes with compatible sealant approved by tape manufacturer.

D. Do not remove release paper from tape until just before each glazing unit is installed.

E. Place setting blocks at 1/4 points.

F. Rest glass on setting blocks and press against tape with sufficient pressure to ensure full contact and adhesion at perimeter.

G. Place glazing tape on free perimeter of glass in same manner described above.

H. Install removable stop, avoid displacement of tape, exert pressure on tape for full continuous contact.

I. Knife trim excess or protruding tape.

J. After installation of stops, apply fillet bead of glazing sealant along entire glazing perimeter on both sides of glazing, installed with a substantial "wash" away from the glass, providing a water-tight seal from detergents and cleaning solutions.

3.5 PROTECTION AND CLEANING

A. Protect all glass from breakage immediately after installation by attaching crossed streamers to framing held away from glass. Do not apply markers to glass surface. Remove nonpermanent labels, and clean surfaces.

B. Protect glass from contact with contaminating substances resulting from construction operations including weld splatter. If, despite such protection, contaminating substances do come into contact with glass, remove them immediately as recommended by glass manufacturer.

C. Examine glass surfaces adjacent to or below exterior concrete and other masonry surfaces at frequent intervals during construction, but not less than once a month, for build-up of dirt, scum, alkali deposits, or stains, and remove as recommended by glass manufacturer.

D. Remove and replace glass that is broken, chipped, cracked, abraded, or damaged in any way, including natural causes, accidents and vandalism, during construction period.

E. Wash both sides of glazing not more than four (4) days before inspection for Substantial Completion. Wash glass as recommended by glass manufacturer.

END OF SECTION 11 19 33

SECTION 111943 – DETENTION FURNISHINGS AND EQUIPMENT

PART 1 - GENERAL

1.1 RELATED DOCUMENTS

A. Drawings and general provisions of the Contract, including General and Supplementary Conditions and Division 01 Specification Sections, apply to this Section.

1.2 SUMMARY

A. Section Includes:

1. Detention Metal Bench
2. Detention Convex Security Mirrors
3. Detention Countertop
4. Detention Desk Surface Mounted
5. Pistol Locker
6. Detention Stools
7. Detention Equipment Accessories

B. Related Requirements:

1. Division 05 Section “Metal Fabrications”
2. Division 05 Section “Tamper Proof Metal Fasteners”
3. Division 07 Section “Security Joint Sealants”
4. Division 09 Section “Interior Painting”
5. Division 11 Section “General Provisions for Detention Work”
6. Division 11 Section “Detention Hardware”
7. Division 11 Section “Detention Hollow Metal Wall Panels”
8. Division 11 Section “Detention Metal Ceiling Assemblies”

1.3 SUBMITTALS

A. Product Data: For each type of product.

1. Include construction details, material descriptions, dimensions of individual components and profiles, and finishes for each type of detention furnishing indicated.

B. Shop Drawings: For each type of detention furnishing.

1. Include plans, elevations, sections, details, and attachments to other Work.

C. Coordination Drawings: Drawings of each built-in anchor supporting detention furnishings, including those to be installed as work of other Sections, drawn to scale and coordinating anchorage with detention furnishings. Show the following:

1. Locations, dimensions, and profiles of wall and floor reinforcements.
2. Locations and installation details of built-in anchors.
3. Elevations of each detention furnishing showing dimensions of furnishing, preparations for receiving anchors, and locations of anchorage.
4. Details of attachment of each detention furnishing to built-in anchors.

D. Samples: Manufacturer's color charts showing the full range of colors available for units with factory-applied color finishes.

1.4 QUALITY ASSURANCE

A. Detention Equipment Contractor (DEC) Qualifications:

1. General: Refer to Section 11 19 00.

B. Provide detention furnishings and equipment manufactured by a single firm specializing in the production of this type of work.

1.5 DELIVERY, STORAGE AND HANDLING

A. Deliver, store and handle detention furnishings and equipment per manufacturer's requirements.

PART 2 - PRODUCTS

2.1 MANUFACTURER OF DETENTION FURNISHINGS AND EQUIPMENT

A. Manufacturers: Subject to compliance with requirements, provide products by one of the following:

1. American Jail Products; Troy, NY
2. Jails Correctional Products; Minster, OH
3. Majestic Solutions, Inc.; Madison, AL
4. Maximum Security Products Corp.; Albany, NY
5. PSI LLC.; Minneapolis, MN
6. PDI; Orange, CA
7. Southern Steel Company; San Antonio, TX
8. Sweeper Metal Fabricators Corp.; Drumright, OK
9. Viking Products; Orange, CA
10. Willo Products; Decatur, AL
11. Brey Krause MFG. PA

2.2 DETENTION METAL BENCH (MBA)

A. Detention Bench:

1. Products: Subject to compliance with requirements, provide the following:

   a. Viking Products
   b. Global Industries
   c. Brey Krause MFG.
   d. Or approved equal.

2. Construction:

   a. Size: Depth & Length as indicated on the drawings.
   b. Mount bench to finish floor per details.
   c. Provide low-mod gel, equal to Sikadur 23 by Sika, around perimeter of bench to detention hollow metal panels.

3. Finishes:

   a. Stainless Steel Finish Seat:

      1) Surface Preparation: Remove tool and die marks and stretch lines, or blend into finish.
      2) Polished Finish: Grind and polish surfaces to produce uniform finish, free of cross scratches.

   b. Base Supports:

      1) Stainless Steel or Powder Coated Metal
      2) Color as selected by Architect.

2.3 DETENTION CONVEX SECURITY MIRRORS (DMQ)

A. Mirror - Quarter Dome:

1. Size:

   a. 27 inch length.
   b. 9 inch height.
   c. 19 inch depth.

2. Construction:

   a. Mirror: 0.125 inch (3.175 mm) polycarbonate with a pure silver reflective coating on inside surface. Fully enclosed foam insert fills cavity to reduce flexing and

enhance strength. Ninety (90) degree view.

b. Frame: 3/16 inch by 1 inch (4.8 mm by 25.4 mm) steel has recessed holes for fastening to any solid flat surface. Powder coated to provide durable smooth finish.

2.4 DETENTION SHELF WALL MOUNTED (DSWM):

1. Shelf Construction:

   a. Shelf overall size of (top) to be 12 inches by 42 inches.
   b. Shelf to be 3/16 inch (4.8 mm) thick steel with 1-1/2 inch (38 mm) flange front, sides and rear.
   c. 3/16 inch (4.8 mm) steel plate side brackets to extend to front edge of top and extend 5 inches (127 mm) below top, with 3/4 inch (19 mm) bend at bottom edge at 45 degrees.

2. Weld Plate

   a. Supports for shelf top steel gusset plates to be 3/16 inch (4.8 mm) thick by 11 7/8 inches long by 5 inches tapered with 1 ½" flanges with 3/8" pre-drilled holes pre details for welding or fastening to detention metal panel

3. Shelf to be continuous welded to weld plates and finish ground, eliminating sharp corners and edges.
4. Provide low-mod gel, equal to Sikadur 23 by Sika, around perimeter of embed plates.
5. Steel components shall be provided with one (1) shop coat of primer. Field finish paint by Section 099123, color as selected by Architect. Verify primer compatibility with finish paint as specified in Section 099123.

2.5 PISTOL LOCKERS (L-P6SR)

A. Manufacturers: Subject to compliance with requirements, provide products by one of the following:

   1. American Jail Products
   2. Southern Folger
   3. Viking Products

B. Cabinet: Cabinet formed from 3/16 inch (4.7 mm) nominal-thickness steel sheet.

   1. Compartments: 6 QTY.
   2. Compartments lined with 1/8 inch (3 mm) felt.
   3. Provide compartment/key labels and numbers (as per the Owner's direction and requirements).

C. Doors: Swing out compartment doors formed from 3/16 inch (4.7 mm) thick steel plate,

supported by heavy-duty continuous bottom hinge.

D. Locks:

1. Provide each compartment with snap locks, each compartment individually keyed and master keyed.

E. Mounting:

1. Surface and semi-recessed models to have 2 inches by 2 inches by 3/16 inch (51 mm by 51 mm by 4.8 mm) angle trim.
2. Recessed models to have 2 inches by 4 inches by 3/16 inch (51 mm by 102 mm by 4.8 mm) masonry tabs.
3. Top of pistol lockers to be mounted at 5 feet 4 inches (1625.6 mm) above finish floor.
4. See floor plans for recessed mounted or surface mounted.

F. Assembly shall be provided with powder coat finish paint, color as selected by Architect.

2.6 FLOOR MOUNTED STOOL WITH STAINLESS STEEL SEAT (ST)

A. Construction:
1. Stool seat shall be 12" in diameter with a 1 1/2" flange, fabricated of 16-gauge stainless steel.
2. The underside of the seat is to have a 3/16" support plate, welded to the seat and continuously welded to the vertical seat support.
3. Vertical seat support shall be constructed of a 2 1/2" diameter schedule 40 iron pipe, continuously welded to a 8" x 8" x 3/16" base plate.
4. Stool height is 1'-6".

B. Provide base plate with four (4) - 7/16" diameter holes, with 3/8" diameter security - type Hilti HVA adhesive anchors.

C. Provide low-mod gel, equal to Sikadur 23 by Sika, around perimeter of base- plate.

D. Steel components shall be provided with one (1) shop coat of primer. Field finish paint by Section 09900, color as selected by Architect. Verify primer compatibility with finish paint as specified in Section 09900. Stainless steel shall be type 304 with a No. 3 finish.

2.7 DETENTION STOOL - WALL MOUNTED – SWING TYPE (ST-WS)

A. Construction:
1. Stool seat shall be 12" in diameter, fabricated of 14-gauge stainless steel. Seat to be reinforced with 12" diameter x 10-gauge plate and 3/8” steel gusset plates. Seat shall be formed over and returned to encapsulate the seat reinforcement. See stool detail.
2. Support arm assembly shall be fabricated from 3/8" steel plate.
3. Wall attachment for stool to be constructed of 10" x 12" x 1/4" steel. Provide (4) 9/16”

holes for fastening or welding plate to wall.

B. Provide low-mod gel, equal to Sikadur 23 by Sika, around perimeter of embed plates.

C. Steel components shall be provided with one (1) shop coat of primer. Field finish paint by Section 09900, color as selected by Architect. Verify primer compatibility with finish paint as specified in Section 09900. Stainless steel seat shall be type 304 with a No. 3 finish.

2.8 DETENTION EQUIPMENT ACCESSORIES

A. Provide accessories, anchorage inserts and security fasteners for a complete, tamperproof installation.

B. Exposed Security Fasteners:

1. Provide torx-head (star design with center pin) security fasteners for anchoring work in exposed detention areas. Comply with specification section 05 05 53.
2. Finish shall match that specified of the item anchored.

PART 3 - EXECUTION

3.1 EXAMINATION

A. Examine substrates, areas, and conditions, with Installer present, for compliance with requirements for installation tolerances and other conditions affecting performance of the Work.

B. Examine roughing-in for embedded and built-in anchors to verify actual locations before installation.

C. Notify the General Contractor in writing of conditions detrimental to the proper and timely completion of the work.

D. For the record, prepare written report, endorsed by Installer, listing conditions detrimental to performance of the Work.

E. Proceed with installation only after unsatisfactory conditions have been corrected.

3.2 INSTALLATION

A. Expenses carried by the Architect/Engineer, Project Manager or Owner in troubleshooting equipment problems caused by inadequate workmanship or other form of poor performance on the part of the Contractor, shall be borne by the Contractor.

B. Comply with manufacturer's printed installation instructions.

C. Touch-up painting of factory finished or factory primed items is the Installer's responsibility.

D. Fill voids between materials of the detention equipment and embeds or other physical construction with low-mod gel, equal to Sikadur 23, by Sika.

3.3 CLEANING

A. Clean equipment thoroughly prior to Substantial Completion.

3.4 PROTECTION

A. Protect equipment and finishes until Substantial Completion.

B. Replace damaged equipment as directed by the Architect.

END OF SECTION 11 19 43

SECTION 111946 – DETENTION TOILET ACCESSORIES

PART 1 - GENERAL

1.1 RELATED DOCUMENTS

A. Drawings and general provisions of the Contract, including General and Supplementary Conditions and Division 01 Specification Sections, apply to this Section.

1.2 SUMMARY

A. Section Includes:

1. Detention mirrors.
2. Miscellaneous detention toilet accessories.
3. Detention grab bars.
4. Detention toilet paper holders.

B. Related Requirements:

1. Division 05 Section “Metal Fabrications”
2. Division 05 Section “Tamper Proof Metal Fasteners”
3. Division 07 Section “Security Joint Sealants”
4. Division 09 Section “Interior Painting”
5. Division 11 Section “General Provisions for Detention Work”
6. Division 11 Section “Detention Hardware”
7. Division 11 Section “Detention Hollow Metal Wall Panels”
8. Division 11 Section “Detention Metal Ceiling Assemblies”

1.3 SUBMITTALS

A. Product Data: For each type of product.

1. Include construction details, material descriptions, dimensions of individual components and profiles, and finishes for each type of detention toilet accessories indicated.

B. Shop Drawings: For each type of detention toilet accessories.

1. Include plans, elevations, sections, details, and attachments to other Work.

1.4 QUALITY ASSURANCE

A. Detention Equipment Contractor (DEC) Qualifications:

1. General: Refer to Section 11 19 00.

B. Provide detention toilet accessories manufactured by a single firm specializing in the production of this type of work.

1.5 DELIVERY, STORAGE AND HANDLING

A. Deliver, store and handle detention toilet accessories per manufacturer's requirements.

PART 2 - PRODUCTS

2.1 DETENTION MIRROR WITH EMBEDDED MOUNTING PLATE

A. Detention Mirror with Embedded Mounting Plate - Accessible Cell: (DMA1)

1. Mirror:

a. Mirror frame dimensions shall be minimum 12 by 31 inches (305 by 788 mm), fabricated from 0.0625 inch (1.59 mm) nominal-thickness, chrome-plated steel sheet.
b. Mirror opening shall be minimum 10 by 29 inches (254 by 736.6 mm). Mirror shall be made of 0.0394 inch (1.0 mm) thick stainless steel
c. Include chromium plated security fasteners.

2. Embedded Mounting Plate:

a. Embedded mounting plate to be constructed of 1/4 inch (6 mm) plate steel.
b. Embed plate shall be drilled and tapped for security fasteners.
c. Embedded mounting plate shall be provided with one (1) shop coat primer.

3. Mount unit so that bottom edge of reflecting surface is 40 inches (1016 mm) above finish floor.
4. Provide low-mod gel, equal to Sikadur 23 by Sika, around perimeter of frame and embed.

2.2 DETENTION TOILET PAPER HOLDERS – (TP-D / Double Sided)

1. Model/Manufacturer: Custom Designed by Architect

a. Acorn Engineering Co.
b. American Specialties, Inc.
c. Norix Group, Inc.
d. PSI LLC.
e. Viking Products

2. Construction:

a. Double Sided Toilet Paper Holder
b. Minimum 5 inches diameter by 4-1/2 inches (127 mm diameter by 114 mm) deep; formed from 0.062 inch (1.57 mm) thick, stainless-steel sheet.
c. Face: 7 inches (178 mm) square with 1 ½" front angled flange
d. Secure to wall with adjustment though bolts (Welded)

3. Mount bottom of holder at 16 inches (406 mm) above finish floor.
4. Provide low-mod gel, equal to Sikadur 23 by Sika, around perimeter of toilet tissue holder.

2.3 DETENTION GRAB BARS

A. Detention Grab Bars (Stainless Steel) (DGB_):

1. Model/Manufacturer:

a. US130-A Series/A&J Washroom Accessories
b. SA70 Series/Bradley Corp.
c. IGS/Norix Group, Inc.
d. GB-600/PSI LLC.
e. GB/Viking Products

2. Construction:

a. 1-1/2 inches (38.1 mm) in diameter; formed from 0.038 inch (0.95 mm) thick, stainless-steel tubing, with 3 inches (76.2 mm) diameter flanges formed from 0.125 inch (3.18 mm) thick, stainless steel. Closure plates formed from 0.125 inch (3.18 mm) thick, stainless steel. All-welded construction.

3. Length: As indicated on Drawings.
4. Mounting: Front mounting with security fasteners.
5. Mount top of grab bar at 33 to 36 inches (838.2 to 914.4 mm) above finish floor.
6. Provide low-mod gel, equal to Sikadur 23 by Sika, around perimeter of grab bar plates and at all joints.

2.4 MATERIALS

A. Cold-Rolled Steel Sheet: ASTM A 1008/A 1008M, CS (Commercial Steel), Type B; suitable for exposed applications.

B. Stainless-Steel Sheet, Strip, Plate, and Flat Bars: ASTM A 666 or ASTM A 240/A 240M, austenitic stainless steel, Type 304.

C. Stainless-Steel Tubing: ASTM A 1016 /A 1016M-08, austenitic stainless steel, Type 304, seamless.

2.5 FINISHES

A. Embed plate shall be provided with one (1) shop coat of primer. Field finish paint by Section 099123, color as selected by Architect. Verify primer compatibility with finish paint as specified in Section 099123.

B. Stainless-Steel Finish:

1. Surface Preparation: Remove tool and die marks and stretch lines, or blend into finish.
2. Polished Finish: Grind and polish surfaces to produce uniform finish, free of cross scratches.

a. When polishing is completed, passivate and rinse surfaces. Remove embedded foreign matter and leave surfaces chemically clean.
b. Directional Satin Finish: No. 4.
c. Mirrorlike Reflective, Nondirectional Polish: No. 8.

C. Chrome Plating: ASTM B 456, Service Condition Number SC 2 (moderate service).

2.6 DETENTION EQUIPMENT ACCESSORIES

A. Provide accessories, anchorage inserts and security fasteners for a complete, tamperproof installation.

B. Exposed Security Fasteners:

1. Provide torx-head (star design with center pin) security fasteners for anchoring work in exposed detention areas. Comply with specification section 050553.
2. Finish shall match that specified of the item anchored.

PART 3 - EXECUTION

3.1 EXAMINATION

A. Examine substrates, areas, and conditions, with Installer present, for compliance with requirements for installation tolerances and other conditions affecting performance of the Work.

B. Examine roughing-in for embedded and built-in anchors to verify actual locations before installation.

C. Notify the General Contractor in writing of conditions detrimental to the proper and timely completion of the work.

D. For the record, prepare written report, endorsed by Installer, listing conditions detrimental to performance of the Work.

E. Proceed with installation only after unsatisfactory conditions have been corrected.

3.2 INSTALLATION

A. Expenses carried by the Architect/Engineer, Project Manager or Owner in troubleshooting equipment problems caused by inadequate workmanship or other form of poor performance on the part of the Contractor, shall be borne by the Contractor.

B. Comply with manufacturer's printed installation instructions.

C. Touch-up painting of factory finished or factory primed items is the Installer's responsibility.

D. Fill voids between materials of the detention toilet accessories and embeds or other physical construction with low-mod gel, equal to Sikadur 23, by Sika.

3.3 CLEANING

A. Clean equipment thoroughly prior to Substantial Completion.

3.4 PROTECTION

A. Protect equipment and finishes until Substantial Completion.

B. Replace damaged equipment as directed by the Architect.

END OF SECTION 11 19 46

SECTION 111973 – DETENTION METAL CEILING ASSEMBLIES

PART 1 - GENERAL

1.1 RELATED DOCUMENTS

A. Drawings and general provisions of the Contract, including General and Supplementary Conditions and Division 1 Specification Sections, apply to this Section.

1.2 SUMMARY

A. Section Includes:

1. Minimum security suspended pan type acoustical ceiling systems.
2. Medium [Grades 3] security single skin plank type acoustical ceiling systems.

B. Related Requirements:

1. Division 04 Section “Unit Masonry Assemblies”
2. Division 05 Section “Metal Fabrications”
3. Division 05 Section “Tamper Proof Metal Fasteners”
4. Division 07 Section “Security Joint Sealants”
5. Division 11 Section “General Provisions for Detention Work”
6. Division 11 Section “Detention Hardware”
7. Division 21 for Fire Suppression
8. Division 22 for Plumbing
9. Division 23 for Heating ventilating and Air Conditioning
10. Division 26 for Electrical
11. Division 27 for Communications
12. Division 28 for Electronic Safety and Security

1.3 REFERENCES

A. ASTM A 1008/A 1008M-00, Specification for Steel, Sheet and Strip, Cold-Rolled, Carbon, Structural, High-Strength Low-Alloy, and High-Strength Low-Alloy with Improved Formability

B. ASTM A 1011/A 1011M-00, Specification for Steel, Sheet and Strip, Hot-Rolled, Carbon, Structural, High-Strength Low-Alloy, and High-Strength Low-Alloy with Improved Formability

C. ASTM A 653/A 653M-97, Specification for Steel Sheet, Zinc-coated (Galvanized) or Zinc-Iron Alloy Coated (Galvannealed) by the Hot Dipped Process (Commercial Steel)

D. ASTM A 666-96b, Standard Specification for Annealed or Cold-Worked Austenitic Stainless Steel Sheet, Strip, Plate and Flat Bar

E. ASTM B 117-97, Standard Practice for Operating Salt Spray (Fog) Apparatus

F. ASTM D 610-95, Standard Test Method for Evaluating Degree of Rusting on Painted Steel Surfaces

G. ASTM D 714-87, (1994), Standard Test Method for Evaluating Degree of Blistering of Paints

H. ASTM D 1735-97, Standard Practice for Testing Water Resistance of Coatings Using Water Fog Apparatus

I. ASTM C 635-00, Standard Specification for the Manufacture, Performance and Testing of Metal Suspension Systems for Acoustical Tile and Lay-in Panel Ceilings

J. ASTM C 636-03, Standard Practice for Installation of Metal Ceiling Suspension Systems for Acoustical Tile and Lay-In Panels

K. ASTM C 423, Standard Test Method for Sound Absorption and Sound Absorption Coefficient by the Reverberation Room Method

L. ASTM F 2322, Standard Test Methods for Physical Assault on Vertical Fixed Barriers for Detention and Correctional Facilities

M. ASTM F 2697, Standard Test Methods for Physical Assault on Overhead Fixed Barriers for Detention and Correctional Facilities

N. ASTM E-84-04, Standard Test Method for Surface Burning Characteristics of Building Materials

O. AWS D1.3, Structural Welding Code for Sheet Metal

P. ISO 9001, International Standards Organization - Standards for Quality Management

Q. CISCA Guidelines

R. Abbreviations:

1. DEC: Detention Equipment Contractor
2. ASTM: American Society for Testing Materials
3. AWS: American Welding Society
4. CISCA: Ceilings and Interior Systems Construction Association

1.4 PERFORMANCE REQUIREMENTS

A. Detention metal ceiling assemblies for this Contract shall be constructed as specified and to meet the following tests. An independent testing laboratory shall perform the tests described below, with data attesting to the construction. Test data shall have been performed within the past five (5) years and shall be submitted with the shop drawing submittal.

1. Ceilings tested in accordance with ASTM F2697, “Ceiling System Impact Test”.
2. Ceilings tested in accordance with ASTM F2697, “Ceiling Static Load Test”.

B. Acoustical Performance:

1. Suspended pan type ceiling system shall provide a Noise Reduction Coefficient (NRC) of not less than .80 when tested in accordance with ASTM C 423 and in an E-400 mounting as defined in ASTM E 795.
2. Single skin plank ceiling system shall provide a NRC of not less than .90 when tested in accordance with ASTM C 423.
3. Double skin plank ceiling system shall provide a NRC of not less than .65 when tested in accordance with ASTM C 423.
4. Acoustical fill flame spread index shall not exceed 15 with smoke developed value not exceeding 5 when tested in accordance with ASTM C 84.

1.5 COORDINATION

A. Coordinate layout and installation of security ceiling assemblies with other construction that penetrates ceilings or is supported by them, including light fixtures, HVAC equipment, fire-suppression system, and partition assemblies.

1.6 SUBMITTALS

A. Shop Drawings:

1. Provide detailed drawings including: layout of ceiling systems, details of construction, thickness of metal, anchoring details, conditions at openings, installation details and methods, and other data pertinent to the installation, including illustration of sequence of installation to accomplish interlocking panels.

B. Samples:

1. Supply a 12 inch by 12 inch (305 mm by 305 mm) section of each ceiling system being supplied showing wall mounting members and panel sections.
2. All samples submitted shall be of the production type and shall represent in all respects the minimum quality of work to be furnished by the manufacturer. No work represented by the samples shall be fabricated until the samples are approved, and any downgrading of quality demonstrated by the samples can be cause for rejection of the work.

C. Certification by Manufacturer: That products supplied complies with performance requirements specified.

D. Product Test Reports: Showing compliance with specified requirements.

E. Warranties: Special warranties specified in this Section.

1.7 QUALITY ASSURANCE

A. Detention Equipment Contractor (DEC) Qualifications:

1. General: Refer to Section 11 19 00.

B. Provide detention metal ceiling assemblies manufactured by a single firm specializing in the production of this type of work.

C. Installation shall be under supervision of manufacturer approved personnel.

D. Job Site Check:

1. When and as directed by the Architect, the contractor shall destroy a randomly selected ceiling panel by sawing it in half or otherwise taken apart as deemed necessary, for verification that construction is in accordance with these specifications.
2. If the panel construction does not conform to these specifications the non-conforming panels shall be repaired or replaced at the manufacturer's expense.
3. Upon approval of the Architect dispose the destroyed door.

1.8 DELIVERY, STORAGE AND HANDLING

A. Deliver, store and handle detention material per manufacturer's requirements.

B. Protect units and finishes from damage during shipping, storage, handling, installation and construction of other work in the same area.

1.9 WARRANTY

A. General Warranty: The special warranty specified in this Article shall not deprive the Owner of other rights the Owner may have under other provisions of the Contract Documents and shall be in addition to, and run concurrent with, other warranties made by the Contractor under requirements of the Contract Documents.

B. Special Warranty: Submit a written warranty executed by the manufacturer and installer agreeing to repair or replace materials furnished under this Section that fail in materials or workmanship within the specified warranty period. Submit the warranty to the Architect for approval.

C. Warranty Period: One (1) year from date of Substantial Completion.

PART 2 - PRODUCTS

2.1 SINGLE SKIN INTER-LOCKING PLANK CEILING SYSTEM - SECURITY GRADES 3 (SMC-1)

A. Manufacturers: Subject to compliance with requirements, provide products by one of the following:

1. METALWORKS SecureLock Plus by Armstrong World Industries
2. Cel-Line by Gordon, Inc.
3. BarrierDek by Trussbilt.

B. Material:

1. Panel face sheets shall be made of commercial quality, level, cold-rolled steel conforming to ASTM A 1008 / A 1008M CS Type B and shall have a zinc coating applied by the hot-dip process conforming to ASTM A 653/A653M Commercial Steel (CS), coating designation A40. The steel shall be free of scale, pitting, coil breaks or other surface blemishes. It shall also be free of buckles, waves or any other defects caused by the use of improperly leveled sheets.
2. For severely corrosive conditions and where specified, face sheets and components shall be stainless steel conforming to ASTM A 666, Type 304.

C. Construction:

1. Panel face sheet thicknesses shall be for [Grades 3 - 0.093 inch (2.3 mm), Grade 4 - 0.067 inch (1.7 mm)] minimum thickness.
2. Ceiling planks: Shall be 24 inches (610 mm) wide and supplied in manufacturer's standard lengths of 8 feet, 10 feet, and 12 feet (2.4 m, 3 m or 3.7 m). All ceiling planks shall have factory formed inter-locking edges and shall be perforated with 0.125 inch (3 mm) diameter holes, staggered 0.2 inch (5 mm) on center for a 29% open area.
3. Wall perimeter angles: Shall be formed angles 0.093 inch (2.3 mm) minimum thickness and punched 16 inches (406 mm) on center for 3/8 inch (9.5 mm) expansion anchors. Panels shall be secured to the wall angles using 0.093 inch (2.3 mm) concealed angle clips.
4. Interim Tee supports: Tee supports shall be two wall mounting angles bolted back-to-back using 3/8 inch (9.5 mm) - 16 bolts, 24 inches (610 mm) on center.

   a. Suspension for Tee supports shall be 3/8 inch (9.5 mm) galvanized threaded rod, bolted to the above structure and the Tee support, 36 inches (914 mm) on center.

5. Fasteners: Any exposed fasteners shall be a minimum No.10 size, pin Torx®, tamper-proof security screws or blind rivets. Wall anchor bolts shall be 3/8 inch (9.5 mm) diameter (Rawl 5015 or equivalent) and shall be placed 16 inches (406 mm) on center. Anchors for securing the wall moldings to the wall shall be furnished by the ceiling manufacturer.
6. Acoustical material: The inside surface of all perforated ceiling pans shall be covered with a Class "A" poly-encapsulated fiberglass insulation of sufficient thickness and density to provide the acoustical requirements as outlined in this specification.
7. Lights, HVAC: All light and air units are to be sized to fit into and trim off to full panel width openings and shall be independently supported from above by the trade requiring

the opening.

8. Finish: All components of the panel and suspension system visible from the floor side shall have a factory applied finish. Prior to painting, all surfaces shall be cleaned of rust, oil and other impurities by receiving a multi-stage pre-treatment consisting of degrease and phosphate coating, clear water rinse and non-chromate sealer and rinse, to condition the surface of the metal to resist and inhibit corrosion and promote paint adhesion. Finish to be applied after perforation to insure coating of the perforated holes. Panels and components shall be coated with DuPont TGIC Polyester or equal, white powder coat, applied at a minimum of 2 mils thickness (dry).

2.2 DETENTION EQUIPMENT ACCESSORIES

A. Provide accessories, anchorage inserts and security fasteners for a complete, tamperproof installation.

B. Exposed Security Fasteners:

1. Provide torx head (star design with center pin) security fasteners for anchoring work in exposed detention areas. Comply with specification section 05 05 53.
2. Finish shall match that specified of the item anchored.

2.3 DETENTION ACCESS PANELS

A. Provide and install detention access panels (DCAP) within Detention Metal Ceilings.

1. Medium security access panel
2. Factory powder coat finish.
3. Factory prepped Mfg. Standard 24x24 panel with security torx screws
4. Compatible with (SMC-1)

PART 3 - EXECUTION

3.1 DELIVERY, STORAGE AND HANDLING

A. Protect panels from damage during transit to job storage.

B. Inspect panels upon delivery for damage. Minor damage may be repaired provided finish items are equal in respect to new work and acceptable to Architect/Engineer. Otherwise, remove and replace with new material.

3.2 INSTALLATION

A. General:

1. Install ceiling system using the approved submittal drawings and contract documents. Install using the manufacturer's installation instructions.
2. Accurately locate partitions, holes, cut outs and verify locations with other trades.
3. Set closures and steel supports with anchors to suit condition.
4. Erect true and level with close fitting tolerances.
5. Bearing at ends shall be a minimum of 1 inch (25 mm).

B. Welding - Security Grades 1 and 2:

1. Execute welding in accordance with the American Welding Society's "Structural Welding Code AWS D1.3". Arc welding shall be used in fabrication and erection work where practical.
2. Welders and tackers shall be qualified by the American Welding Society's testing procedure.
3. Surfaces to be welded shall be cleaned of loose scale, rust, oil, grease, paint and other foreign matter.
4. Welds shall be neat, have a clean appearance and be deep penetration. Joints shall be tight and true.
5. Welds shall be uniform section and smoothness without overlaps and a minimum of craters, porosity and clinkers.
6. Projecting burrs, edges or rough spots shall be removed by grinding. Plug welds shall be ground smooth where exposed to view.
7. Visual inspection of edges, end fillets and butt joints shall show good fusion width and penetration into base metals.
8. Take precautions to minimize stress and distortions due to heat.
9. Repairing of defective welds by adding new material over the defects is not permitted.

C. Fastenings:

1. Fasten supporting members to each other and to building construction as detailed or as otherwise required to provide a secure, permanent installation.
2. Where fastening spacings and sizes are not shown, use spacings and sizing of bolts, screws and welds which will develop the full strength of the members before failure occurs in the fastenings.

D. Touch-up Painting:

1. Immediately after installation, areas where prime or finish coat has been damaged and where welding has occurred shall be sanded smooth and touched up with same primer or finish touch up paint as applied by the manufacturer.
2. Remove rust before touch-up primer is applied.

3.3 FIELD QUALITY CONTROL

A. Hold a meeting with other trades to review installation procedures and workmanship with a special emphasis on unusual conditions to ensure correct installation procedures.

B. Security panel system shall be installed in place under the supervision of a qualified supervisor,

trained and furnished by installer.

END OF SECTION 11 19 73

SECTION 113013 - RESIDENTIAL APPLIANCES

PART 1 - GENERAL

1.1 RELATED DOCUMENTS

A. Drawings and general provisions of the Contract, including General and Supplementary Conditions and Division 01 Specification Sections, apply to this Section.

1.2 SUMMARY

A. Section Includes:

1. Cooking appliances.
2. Refrigeration appliances.
3. Cleaning appliances.

1.3 ACTION SUBMITTALS

A. Product Data: For each type of product.

1. Include installation details, material descriptions, dimensions of individual components, and finishes for each appliance.
2. Include rated capacities, operating characteristics, electrical characteristics, and furnished accessories.

B. Product Schedule: For appliances. Use same designations indicated on Drawings.

1.4 INFORMATIONAL SUBMITTALS

A. Product Certificates: For each type of appliance.

1.5 CLOSEOUT SUBMITTALS

A. Operation and Maintenance Data: For each residential appliance to include in operation and maintenance manuals.

1.6 WARRANTY

A. Special Warranties: Manufacturer agrees to repair or replace residential appliances or components that fail in materials or workmanship within specified warranty period.

1. Warranty Period: Two years from date of Substantial Completion.

PART 2 - PRODUCTS

2.1 PERFORMANCE REQUIREMENTS

A. Electrical Appliances: Listed and labeled as defined in NFPA 70, by a qualified testing agency, and marked for intended location and application.

B. Accessibility: Where residential appliances are indicated to comply with accessibility requirements, comply with applicable provisions in the DOJ's 2010 ADA Standards for Accessible Design and ICC A117.1.

2.2 RANGES

A. Electric Range **(RNG1)**: Slide-in range with one oven(s) and complying with AHAM ER-1.

1. Manufacturers: Subject to compliance with requirements, provide products by one of the following:

   a. Frigidaire; Gallery #GCRE3060AF
   b. GE Profile; PB935YPFS
   c. LG Corp; LREL6325F
   d. Samsung; NE63A6711SS
2. Width: 30 inches (762 mm).
3. Electric Burner Elements: Minimum of four.
   a. Radiant Type: Manufacturer standard.
   b. Controls: Digital panel controls, located on front.

4. Oven Features:

   a. Capacity: 5 cu. Ft minimum.
   b. Operation: Convection.
   c. Broiler: Located in top of oven.
   d. Air Frying.
   e. Oven Door(s): Counterbalanced, removable, with observation window and full-width handle.
   f. Electric Power Rating:

      1) Oven(s): Manufacturer's standard.
      2) Broiler: Manufacturer's standard.

   g. Controls: Digital panel controls and timer display, located on front.

5. Anti-Tip Device: Manufacturer's standard.
6. Electric Power Supply: 240 V, 60 Hz, 1 phase, 50 A.
7. Material: Stainless steel with manufacturer's standard cooktop.

2.3 MICROWAVE OVENS

A. Microwave Oven:

1. Manufacturers: Subject to compliance with requirements, provide products by one of the following:

   a. GE Profile; PWB7030SVSS
   b. LG Corp; MZBZ1715S
   c. Whirlpool Corporation; WMMF5930PV

2. Mounting: Built-in.
3. Type: Conventional.
4. Capacity: Minimum 1.6 cu. ft.
5. Glass Turntable
6. Exhaust Fan: Two-speed fan, nonvented, recirculating type with charcoal filter and with manufacturer's standard 300-cfm (140-L/s) capacity.
7. Microwave Power Rating: Minimum 1000 W.
8. Electric Power Supply: 120 V, 60 Hz, 1 phase, 15 A.
9. Controls: Digital panel controls and timer display.
10. Material: Stainless steel.

2.4 REFRIGERATOR/FREEZERS

A. Refrigerator/Freezer: Two-door refrigerator/freezer with freezer on bottom and complying with AHAM HRF-1.

1. Manufacturers: Subject to compliance with requirements, provide products by one of the following:

   a. Bosch US; BSH Home Appliances Corporation; 500 Series #B36FD50SNS
   b. GE; GFE28GYNFS
   c. LG Corp; LRFXC2606S
   d. Samsung; RF27CG5400SRAA
   e. Whirlpool Corporation; WRF757SDHZ

2. Type: Freestanding.
3. Dimensions:

   a. Width: 36 inches (914 mm).
   b. Depth: 36 inches.
   c. Height: 70 inches.

4. Storage Capacity:

   a. Total capacity: minimum 26 cu. ft.
   b. Shelf Area: Five adjustable glass shelves.

5. Refrigerator Features:

a. Interior light in refrigeration compartment.
b. Water filter.

6. Freezer Features: One freezer compartment(s) configured as pull-out drawer(s).

   a. Automatic defrost.
   b. Automatic icemaker and storage bin.

7. ENERGY STAR: Provide appliances that qualify for the EPA/DOE ENERGY STAR product-labeling program.

8. Appliance Color/Finish: Stainless steel.

B. Refrigerator/Freezer **(Evidence Area)**: Single door refrigerator/freezer with freezer on top and complying with AHAM HRF-1.

1. Manufacturers: Subject to compliance with requirements, provide products by one of the following:
   a. Frigidaire; FRTD2021AS
   b. GE; GTS22KYNRFSS
   c. LG Corp; LRTLS2403S
   d. Whirlpool Corporation; WRT511SZDM.
2. Type: Freestanding.
3. Dimensions:

   a. Width: 33 inches maximum.
   b. Depth: 34 inches maximum.
   c. Height: 70 inches.

4. Storage Capacity:

   a. Total capacity: minimum 20 cu. ft.
   b. Shelf Area: Adjustable glass shelves.

5. Refrigerator Features:

   a. Interior light in refrigeration compartment.
   b. No ice or water dispenser.

6. Freezer Features: One freezer compartment(s) configured as pull-out drawer(s).

   a. Automatic defrost.

7. ENERGY STAR: Provide appliances that qualify for the EPA/DOE ENERGY STAR product-labeling program.

8. Appliance Color/Finish: Stainless steel.

2.5 DISHWASHERS

A. Dishwasher: Complying with AHAM DW-1.

1. Manufacturers: Subject to compliance with requirements, provide products by one of the following:

   a. Bosch US; BSH Home Appliances Corporation; 300 Series #SH53CD5N
   b. GE Profile; PDT715SYVFSS
   c. LG Corp; LDPS6762SS
   d. KitchenAid; KDTM404KPSS
   e.

2. Type: Built-in undercounter.
3. Dimensions:

   a. Width: 24 inches.
   b. Depth: 23 inches.
   c. Height: 34 inches.

4. Capacity:
   a. Water Consumption for Full Load: 3.5 gal. per cycle.

5. Sound Level: Maximum 46 dB.
6. Tub and Door Liner: Stainless steel with sealed detergent and automatic rinsing-aid dispensers.
7. Controls: Touch-pad controls with six wash cycles and hot-air and heat-off drying cycle options.
8. Features:

   a. Waste food disposer.
   b. Self-cleaning food-filter system.
   c. Delay-wash option.
   d. Digital display panel.
   e. Soil-sensing water use control system.

9. ENERGY STAR: Provide appliances that qualify for the EPA/DOE ENERGY STAR product-labeling program.
10. Front Panel: Stainless steel.

11. Appliance Color/Finish: Stainless steel.

2.6 GENERAL FINISH REQUIREMENTS

A. Protect mechanical finishes on exposed surfaces from damage by applying a strippable, temporary protective covering before shipping.

B. Appearance of Finished Work: Noticeable variations in same piece are not acceptable. Variations in appearance of adjoining components are acceptable if they are within the range of approved Samples and are assembled or installed to minimize contrast.

PART 3 - EXECUTION

3.1 EXAMINATION

A. Examine substrates, areas, and conditions, with Installer present, for compliance with requirements for installation tolerances, power connections, and other conditions affecting installation and performance of residential appliances.

B. Examine roughing-in for piping systems to verify actual locations of piping connections before appliance installation.

C. Examine walls, ceilings, and roofs for suitable conditions where overhead exhaust hoods will be installed.

D. Prepare written report, endorsed by Installer, listing conditions detrimental to performance of the Work.

E. Proceed with installation only after unsatisfactory conditions have been corrected.

3.2 INSTALLATION

A. Install appliances according to manufacturer's written instructions.

B. Built-in Equipment: Securely anchor units to supporting cabinets or countertops with concealed fasteners. Verify that clearances are adequate for proper functioning and that rough openings are completely concealed.

C. Freestanding Equipment: Place units in final locations after finishes have been completed in each area. Verify that clearances are adequate to properly operate equipment.

D. Range Anti-Tip Device: Install at each range according to manufacturer's written instructions.

3.3 FIELD QUALITY CONTROL

A. Perform the following tests and inspections:

1. Perform visual, mechanical, and electrical inspection and testing for each appliance according to manufacturers' written recommendations. Certify compliance with each manufacturer's appliance-performance parameters.
2. Leak Test: After installation, test for leaks. Repair leaks and retest until no leaks exist.
3. Operational Test: After installation, start units to confirm proper operation.
4. Test and adjust controls and safeties. Replace damaged and malfunctioning controls and components.

B. An appliance will be considered defective if it does not pass tests and inspections.

C. Prepare test and inspection reports.

3.4 DEMONSTRATION

A. Engage a factory-authorized service representative to train Owner's maintenance personnel to adjust, operate, and maintain residential appliances.

END OF SECTION 113013

SECTION 122413 - ROLLER WINDOW SHADES

PART 1 - GENERAL

1.1 RELATED DOCUMENTS

A. Drawings and general provisions of the Contract, including General and Supplementary Conditions and Division 01 Specification Sections, apply to this Section.

1.2 SUMMARY

A. Section Includes:

1. Manually operated roller shades with single and double rollers.

B. Related Requirements:

1. Section 06100 "Rough Carpentry" for wood blocking and grounds for mounting roller shades and accessories.
2. Section 07900 "Sealants" for sealing the perimeters of installation accessories for light-blocking shades with a sealant.

1.3 ACTION SUBMITTALS

A. Product Data: For each type of product.

1. Include construction details, material descriptions, dimensions of individual components and profiles, features, finishes, and operating instructions for roller shades.

B. Shop Drawings: Show fabrication and installation details for roller shades, including shadeband materials, their orientation to rollers, and their seam and batten locations.

1. Motor-Operated Shades: Include details of installation and diagrams for power, signal, and control wiring.

C. Samples: For each exposed product and for each color and texture specified, 10 inches (250 mm) long.

D. Samples for Initial Selection: For each type and color of shadeband material.

1. Include Samples of accessories involving color selection.

E. Samples for Verification: For each type of roller shade.

1. Shadeband Material: Not less than 10 inches (250 mm) square. Mark interior face of material if applicable.
2. Roller Shade: Full-size operating unit, not less than 16 inches (400 mm) wide by 36 inches (900 mm) long for each type of roller shade indicated.
3. Installation Accessories: Full-size unit, not less than 10 inches (250 mm) long.

F. Product Schedule: For roller shades. Use same designations indicated on Drawings.

1.4 INFORMATIONAL SUBMITTALS

A. Qualification Data: For Installer.

B. Product Certificates: For each type of shadeband material.

1.5 CLOSEOUT SUBMITTALS

A. Operation and Maintenance Data: For roller shades to include in maintenance manuals.

1.6 MAINTENANCE MATERIAL SUBMITTALS

A. Furnish extra materials that match products installed and that are packaged with protective covering for storage and identified with labels describing contents.

1. Roller Shades: Full-size units equal to 5 percent of quantity installed for each size, color, and shadeband material indicated, but no fewer than two units.

1.7 QUALITY ASSURANCE

A. Installer Qualifications: Fabricator of products.

1.8 DELIVERY, STORAGE, AND HANDLING

A. Deliver roller shades in factory packages, marked with manufacturer, product name, and location of installation using same designations indicated on Drawings.

1.9 FIELD CONDITIONS

A. Environmental Limitations: Do not install roller shades until construction and finish work in spaces, including painting, is complete and dry and ambient temperature and

humidity conditions are maintained at the levels indicated for Project when occupied for its intended use.

B. Field Measurements: Where roller shades are indicated to fit to other construction, verify dimensions of other construction by field measurements before fabrication and indicate measurements on Shop Drawings. Allow clearances for operating hardware of operable glazed units through entire operating range. Notify Architect of installation conditions that vary from Drawings. Coordinate fabrication schedule with construction progress to avoid delaying the Work.

PART 2 - PRODUCTS

2.1 MANUFACTURERS

A. Source Limitations: Obtain roller shades from single source from single manufacturer.

2.2 MANUALLY OPERATED SHADES WITH SINGLE ROLLERS

A. Basis-of-Design Product: Subject to compliance with requirements, provide Draper Inc; Access Manual FlexShade XDor a comparable product by one of the following:

1. Hunter Douglas Contract.
2. MechoShade Systems.

B. Chain-and-Clutch Operating Mechanisms: With continuous-loop bead chain and clutch that stops shade movement when bead chain is released; permanently adjusted and lubricated.

1. Bead Chains: Stainless steel.

a. Loop Length: Full length of roller shade.
b. Limit Stops: Provide upper and lower ball stops.

C. Rollers: Corrosion-resistant steel or extruded-aluminum tubes of diameters and wall thicknesses required to accommodate operating mechanisms and weights and widths of shadebands indicated without deflection. Provide with permanently lubricated drive-end assemblies and idle-end assemblies designed to facilitate removal of shadebands for service.

1. Roller Drive-End Location: Right side of interior face of shade.
2. Direction of Shadeband Roll: Regular, from back (exterior face) of roller.
3. Shadeband-to-Roller Attachment: Manufacturer's standard method.

D. Mounting Hardware: Brackets or endcaps, corrosion resistant and compatible with roller assembly, operating mechanism, installation accessories, and mounting location and conditions indicated.

E. Shadebands:

1. Shadeband Material: Light-filtering fabric.

a. Light-filtering fabric (northern exposure):

1) Basis of Design Product: Mermet E Screen Fabric, PVC Coated Enduris fiberglass yarn woven in 2 by 2 basketweave, .016 inches thick, 10.7oz/sq yd, composition; 36% Enduris fiberglass core yarn, 64% vinyl, UV Blockage 95%, GREENGUARD Certified, ASTM G21 and ASTM E2180: Pass. Fire rating: NFPA 701, both small- and large-scale tests/California U.S. Title 19, ROHS Compliant

a) Openess: 5%
b) Color: Charcoal/Charcoal

b. Light-filtering fabric (sourthern exposure):

1) Basis of Design Product: Mermet E Screen 5% with **KOOLBLACK®** Technology PVC Coated Enduris fiberglass yarn woven in 2 by 2 basketweave 0.019 inches thick, weight 10.6 oz/sq yd, composition; 36% Enduris fiberglass core yarn, 64% vinyl, UV Blockage 95%. GREENGUARD Certified , ASTM G21 and ASTM E2180: Pass. Fire rating NFPA 701, both small- and large-scale tests/California U.S. Title 19, ROHS Compliant

a) Openness: 5%
b) Color: Charcoal/Charcoal

2. Shadeband Bottom (Hem) Bar: Steel or extruded aluminum.

a. Type: Exposed with endcaps.
b. Color and Finish: As selected by Architect from manufacturer's full range.

F. Installation Accessories:

1. Front Fascia: Aluminum extrusion that conceals front and underside of roller and operating mechanism and attaches to roller endcaps without exposed fasteners.

a. Shape: L-shaped.

b. Height: Manufacturer's standard height required to conceal roller and shadeband assembly when shade is fully open, but not less than 3 inches (76 mm).

2. Endcap Covers: To cover exposed endcaps.
3. Installation Accessories Color and Finish: As selected from manufacturer's full range.

2.3 ROLLER SHADE FABRICATION

A. Product Safety Standard: Fabricate roller shades to comply with WCMA A 100.1, including requirements for flexible, chain-loop devices; lead content of components; and warning labels.

B. Unit Sizes: Fabricate units in sizes to fill window and other openings as follows, measured at 74 deg F (23 deg C):

1. Between (Inside) Jamb Installation: Width equal to jamb-to-jamb dimension of opening in which shade is installed less 1/4 inch (6 mm) per side or 1/2-inch (13-mm) total, plus or minus 1/8 inch (3.1 mm). Length equal to head-to-sill or -floor dimension of opening in which shade is installed less 1/4 inch (6 mm), plus or minus 1/8 inch (3.1 mm).

PART 3 - EXECUTION

3.1 EXAMINATION

A. Examine substrates, areas, and conditions, with Installer present, for compliance with requirements for installation tolerances, operational clearances,and other conditions affecting performance of the Work.

B. Proceed with installation only after unsatisfactory conditions have been corrected.

3.2 ROLLER SHADE INSTALLATION

A. Install roller shades level, plumb, and aligned with adjacent units according to manufacturer's written instructions.

1. Opaque Shadebands: Located so shadeband is not closer than 1 inch (25 mm) to interior face of glass. Allow clearances for window operation hardware.

B. Roller Shade Locations: As indicated on Drawings.

3.3 ADJUSTING

A. Adjust and balance roller shades to operate smoothly, easily, safely, and free from binding or malfunction throughout entire operational range.

3.4 CLEANING AND PROTECTION

A. Clean roller shade surfaces, after installation, according to manufacturer's written instructions.

B. Provide final protection and maintain conditions, in a manner acceptable to manufacturer and Installer, that ensure that roller shades are without damage or deterioration at time of Substantial Completion.

C. Replace damaged roller shades that cannot be repaired, in a manner approved by Architect, before time of Substantial Completion.

3.5 DEMONSTRATION

A. Engage a factory-authorized service representative to train Owner's maintenance personnel to adjust, operate, and maintain motor-operated roller shades.

END OF SECTION 122413

SECTION 123570 – STAINLESS STEEL CASEWORK

PART 1 - GENERAL

1.1 RELATED DOCUMENTS

A. Drawings and general provisions of the Contract, including General and Supplementary Conditions and Division 01 Specification Sections, apply to this Section.

1.2 SUMMARY

A. Section includes stainless-steel countertops

B. Related Requirements:

1. Section 061000 "Rough Carpentry" for wood blocking for anchoring casework.
2. Section 092216 "Non-Structural Metal Framing" for reinforcements in metal-framed partitions for anchoring casework.

1.3 PREINSTALLATION MEETINGS

A. Preinstallation Conference: Conduct conference at Project site.

1.4 COORDINATION

A. Coordinate layout and installation of framing and reinforcements for support of casework.

1.5 ACTION SUBMITTALS

A. Product Data: For each type of product.

B. Shop Drawings: Include plans, elevations, sections, and attachment details.
1. Indicate hardware locations.
2. Indicate locations of and clearances from adjacent walls, doors, windows, other building components, and equipment.
3. Include coordinated dimensions for equipment specified in other Sections.

1.6 DELIVERY, STORAGE, AND HANDLING

A. Protect finished surfaces during handling and installation with protective covering of polyethylene film or other suitable material.

PART 2 - PRODUCTS

2.1 MANUFACTURERS

A. Manufacturers: Subject to compliance with requirements, provide products by one of the following, but not limited to:

1. Blickman.
2. Continental Metal Products Co. Inc.
3. Great Lakes Stainless
4. JW Metal Products

B. Source Limitations: Obtain countertop from single source from single manufacturer.

2.2 COUNTERTOP FABRICATION

A. Countertops, General: Provide units with smooth surfaces in uniform plane, free of defects. Make exposed edges and corners straight and uniformly beveled. Provide front and end overhang of 1.5 inch (38 mm).

B. Stainless Steel:

1. Countertops: Made from stainless steel sheet, not less than 0.062-inch (1.59-mm) nominal thickness, with No. 4 satin finish.

a. Extend top down 1.5 inch (38 mm) at edges with a 1/2-inch (13-mm) return flange under frame. Apply heavy coating of heat-resistant, sound-deadening mastic to undersurface.
b. Form backsplash coved to and integral with top surface.
c. Provide raised full bullnose edge.
d. Reinforce underside of countertop with channels, or use thicker metal sheet where necessary to ensure rigidity without deflection.
e. Weld shop-made joints.
f. Where field-made joints are required, provide hairline butt joints mechanically bolted through continuous channels welded to underside at edges of joined ends. Keep field jointing to a minimum.
g. After fabricating and welding, grind surfaces smooth and polish to produce uniform, directionally textured finish with no cross scratches or evidence of welds. Passivate and rinse surfaces; remove embedded foreign matter and leave surfaces clean.
h. Provide manufacturer standard, stainless steel legs at locations without base cabinets. Provide height adjustable legs or feet.

PART 3 - EXECUTION

3.1 EXAMINATION

A. Examine areas, with Installer present, for compliance with requirements for installation tolerances, location of reinforcements, and other conditions affecting performance of casework.

B. Proceed with installation only after unsatisfactory conditions have been corrected.

3.2 INSTALLATION OF CABINETS

A. Install cabinets level, plumb, and true; shim as required, using concealed shims. Where casework abuts other finished work, apply filler strips and scribe for accurate fit, with fasteners concealed where practical. Do not exceed the following tolerances:

1. Variation of Tops of Base Cabinets from Level: 1/16 inch in 10 feet (1.5 mm in 3 m).
2. Variation of Bottoms of Upper Cabinets from Level: 1/8 inch in 10 feet (3 mm in 3 m).
3. Variation of Faces of Cabinets from a True Plane: 1/8 inch in 10 feet (3 mm in 3 m).
4. Variation of Adjacent Cabinet Surfaces from a True Plane (Lippage): 1/32 inch (0.8 mm).
5. Variation in Alignment of Adjacent Door and Drawer Edges: 1/16 inch (1.5 mm).

B. Base Cabinets: Fasten cabinets to partition framing, wood blocking, or reinforcements in partitions with fasteners spaced not more than 16 inches (400 mm) o.c. Bolt adjacent cabinets together with joints flush, tight, and uniform.

C. Wall Cabinets: Fasten to hanging strips, masonry, partition framing, blocking, or reinforcements in partitions. Fasten each cabinet through the back, near the top, at not less than 16 inches (400 mm) o.c.

D. Install hardware uniformly and precisely. Set hinges snug and flat in mortises.

E. Adjust casework and hardware so doors and drawers align and operate smoothly without warp or bind and so contact points meet accurately. Lubricate operating hardware as recommended by manufacturer.

3.3 CLEANING AND PROTECTION

A. Clean finished surfaces, touch up as required, and remove or refinish damaged or soiled areas to match original factory finish as approved by Architect.

END OF SECTION 123570

SECTION 123661.16 - SOLID SURFACING

PART 1 - GENERAL

1.1 RELATED DOCUMENTS

A. Drawings and general provisions of the Contract, including General and Supplementary Conditions and Division 01 Specification Sections, apply to this Section.

1.2 SUMMARY

A. Section Includes:

1. Solid surface material countertops.
2. Solid surface material backsplashes.
3. Solid surface material end splashes.
4. Bullet Resistant Stainless Steel Deal Tray.
5. Solid surface window sills/stools.
6. Solid surface material sinks.

B. Related Requirements:
1. Section 064116 "Plastic-Laminate Clad Architectural Cabinets" for casework.
2. Section 064113 "Wood-Veneer-Faced Architectural Cabinets and Millwork" for casework.

1.3 ACTION SUBMITTALS

A. Product Data: For countertop materials.

B. Shop Drawings: For countertops and Shower Walls. Show materials, finishes, edge and backsplash profiles, methods of joining, and cutouts for plumbing fixtures.

1. Show locations and details of joints.
2. Show direction of directional pattern, if any.

C. Samples for Initial Selection: For each type of material exposed to view.

D. Samples for Verification: For the following products:

1. Countertop material, 6 inches (150 mm) square.

1.4 INFORMATIONAL SUBMITTALS

A. Qualification Data: For fabricator.

1.5 CLOSEOUT SUBMITTALS

A. Maintenance Data: For solid surface material countertops to include in maintenance manuals. Include Product Data for care products used or recommended by Installer and names, addresses, and telephone numbers of local sources for products.

1.6 QUALITY ASSURANCE

A. Fabricator Qualifications: Shop that employs skilled workers who custom-fabricate countertops similar to that required for this Project, and whose products have a record of successful in-service performance.

B. Installer Qualifications: Fabricator of countertops.

1.7 FIELD CONDITIONS

A. Field Measurements: Verify dimensions of countertops by field measurements before countertop fabrication is complete.

1.8 COORDINATION

A. Coordinate locations of utilities that will penetrate countertops or backsplashes.

PART 2 - PRODUCTS

2.1 SOLID SURFACE MATERIALS

2.2 Solid Surface Material **(SS-1)**: Homogeneous-filled plastic resin complying with ICPA SS-1.
1. Type: Provide Standard type unless Special Purpose type is indicated.
2. Colors and Patterns: Wilsonart, Morning Ice, 9204CE.
3. Integral Sink Bowls: Comply with CSA B45.5/IAPMO Z124.
   a. Sink: Wilsonart AV 1812. Color: As selected by Architect

B. Particleboard: ANSI A208.1, Grade M-2.

2.3 COUNTERTOP FABRICATION

A. Fabricate countertops according to solid surface material manufacturer's written instructions and to the AWI/AWMAC/WI's "Architectural Woodwork Standards."

1. Grade: Premium.

B. Configuration:

1. Front: Straight, slightly eased at top.
2. Backsplash: Straight, slightly eased at corner.
3. End Splash: Matching backsplash.
4. Window sill/stools: Extend ½" beyond surface of wall below the window.

C. Countertops: 1/2-inch- (12.7-mm-) thick, solid surface material with front edge built up with same material.

D. Backsplashes: 1/2-inch- (12.7-mm-) thick, solid surface material.

E. Fabricate tops with shop-applied edges unless otherwise indicated. Comply with solid surface material manufacturer's written instructions for adhesives, sealers, fabrication, and finishing.

1. Fabricate with loose backsplashes for field assembly.
2. Install integral sink bowls in countertops in the shop.

F. Joints: Fabricate countertops without joints.

G. Cutouts and Holes:

1. Undercounter Plumbing Fixtures: Make cutouts for fixtures using template or pattern furnished by fixture manufacturer. Form cutouts to smooth, even curves.

a. Provide vertical edges, slightly eased at juncture of cutout edges with top and bottom surfaces of countertop and projecting 3/16 inch (5 mm) into fixture opening.
b. Provide 3/4-inch (20-mm) full bullnose edges projecting 3/8 inch (10 mm) into fixture opening.

2. Counter-Mounted Plumbing Fixtures: Prepare countertops in shop for field cutting openings for counter-mounted fixtures. Mark tops for cutouts and drill holes at corners of cutout locations. Make corner holes of largest radius practical.
3. Fittings: Drill countertops in shop for plumbing fittings, undercounter soap dispensers, and similar items.

2.4 INSTALLATION MATERIALS

A. Adhesive: Product recommended by solid surface material manufacturer.

1. Adhesives shall have a VOC content of 70 g/L or less.

B. Sealant for Countertops: Comply with applicable requirements in Section 079200 "Joint Sealants."

C. Steel Support Bracket: Minimum 1/8" steel, factory painted Black, 500 lb capacity. 12" x 18" and 15" x 21" or as required to support countertop. Fasten to wall and countertop as required.
1. Similar to Federal Brace; Streamline Countertop Bracket OR US Futaba Workstation Bracket #72531 82 142 and #72531 82 147.

2.5 BULLET RESISTANT DEAL TRAY

A. Manufacturers: Subject to compliance with requirements, provide products by the following:

1. C.R. Laurence; #BRT312
2. Armortex; RMDT-1012; Model TE-DT-NR-1W.
3. Stiles Doors; Ballastica.
4. Approved equals.

B. Type:
1. Material: Brushed Stainless Steel
2. Non-Ricochet
3. Ballistic Level 3 minimum.
4. Size: 12” x 12” (or 12” x 10”) x 2” deep.

C. Recessed installation.
1. Fabricate countertop depth to fully accept Deal Tray.

PART 3 - EXECUTION

3.1 EXAMINATION

A. Examine substrates to receive solid surface material countertops and conditions under which countertops will be installed, with Installer present, for compliance with requirements for installation tolerances and other conditions affecting performance of countertops.

B. Proceed with installation only after unsatisfactory conditions have been corrected.

3.2 INSTALLATION

A. Install countertops level to a tolerance of 1/8 inch in 8 feet (3 mm in 2.4 m), 1/4 inch (6 mm) maximum. Do not exceed 1/64-inch (0.4-mm) difference between planes of adjacent units.

B. Fasten countertops by screwing through corner blocks of base units into underside of countertop. Predrill holes for screws as recommended by manufacturer. Align adjacent surfaces and, using adhesive in color to match countertop, form seams to comply with manufacturer's written instructions. Carefully dress joints smooth, remove surface scratches, and clean entire surface.

C. Fasten subtops to cabinets by screwing through subtops into cornerblocks of base cabinets. Shim as needed to align subtops in a level plane.

D. Secure countertops and benches to subtops with adhesive according to solid surface material manufacturer's written instructions. Align adjacent surfaces and, using adhesive in color to match countertop, form seams to comply with manufacturer's written instructions. Carefully dress joints smooth, remove surface scratches, and clean entire surface.

E. Bond joints with adhesive and draw tight as countertops are set. Mask areas of countertops adjacent to joints to prevent adhesive smears.

1. Install metal splines in kerfs in countertop edges at joints. Fill kerfs with adhesive before inserting splines and remove excess immediately after adjoining units are drawn into position.
2. Clamp units to temporary bracing, supports, or each other to ensure that countertops are properly aligned and joints are of specified width.

F. Install aprons to backing and countertops with adhesive. Mask areas of countertops and splashes adjacent to joints to prevent adhesive smears. Fasten by screwing through backing. Predrill holes for screws as recommended by manufacturer.

G. Complete cutouts not finished in shop. Mask areas of countertops adjacent to cutouts to prevent damage while cutting. Make cutouts to accurately fit items to be installed, and at right angles to finished surfaces unless beveling is required for clearance. Ease edges slightly to prevent snipping.

1. Seal edges of cutouts in particleboard subtops by saturating with varnish.

H. Install backsplashes and end splashes by adhering to wall and countertops with adhesive. Mask areas of countertops and splashes adjacent to joints to prevent adhesive smears. Provide a bead of silicone sealant at backsplash to top and along top of backsplash to wall.

I. Provide sealant at perimeter of windows sills, color to match sill.

END OF SECTION 123661.16

SECTION 124813 - ENTRANCE FLOOR MATS AND FRAMES

PART 1 - GENERAL

1.1 RELATED DOCUMENTS

A. Drawings and general provisions of the Contract, including General and Supplementary Conditions and Division 01 Specification Sections, apply to this Section.

1.2 SUMMARY

A. This Section includes the following:

1. Entrance mats in recessed frames.

B. Related Sections include the following:

1. Division 03 Section "Cast-in-Place Concrete" for slab depression grouting for recessed mats and frames.

1.3 SUBMITTALS

A. Product Data: Include construction details, material descriptions, dimensions of individual components and profiles, and finishes.

B. Shop Drawings: Shop drawings in sufficient detail showing layout of grid and frame specified including details indicating construction relative to materials, direction of traffic, spline locations, profiles, anchors and accessories.

C. Samples for Initial Selection: For each type of product indicated.

D. Maintenance Data: For floor mats and frames to include in maintenance manuals.

1.4 QUALITY ASSURANCE

A. Source Limitations: Obtain floor mats and frames through one source from a single manufacturer.

B. Accessibility Requirements: Provide installed floor mats that comply with Section 4.5 in the U.S. Architectural & Transportation Barriers Compliance Board's "Americans with Disabilities Act (ADA), Accessibility Guidelines for Buildings and Facilities (ADAAG)" and the “Illinois Accessibility Code.”

1.5 PROJECT CONDITIONS

A. Field Measurements: Indicate measurements on Shop Drawings.

1.6 COORDINATION

A. Coordinate size and location of recesses in concrete with installation of finish floors to receive floor mats and frames.

1.7 WARRANTY

A. Manufacturer's Warranty: Manufacturer agrees to repair or replace floor mats and frames that fail(s) in materials or workmanship within specified warranty period.

1. Warranty Period: Five year(s) from date of Substantial Completion.

PART 2 - PRODUCTS

2.1 ENTRANCE FLOOR MATS AND FRAMES, GENERAL

A. Structural Performance: Provide roll-up rail mats and frames capable of withstanding the following loads and stresses within limits and under conditions indicated:

1. Uniform floor load of 300 lbf/sq. ft. (14.36 kN/sq. m).
2. Wheel load of 350 lb (159 kg) per wheel.

B. Regulatory Requirements: Comply with applicable provisions in the U.S. Architectural & Transportation Barriers Compliance Board's ADA-ABA Accessibility Guidelines for Buildings and Facilities and ICC A117.1.

2.2 ROLL-UP RAIL MATS

A. Basis-of-Design Product: Subject to compliance with requirements, provide product indicated on Drawings or comparable product by one of the following:

1. American Floor Products Company, Inc.
2. ARDEN Architectural Specialties, Inc.
3. Balco, Inc.
4. C/S Group.
5. Mats, Inc.
6. Pawling Corporation; Architectural Products Division

B. Roll-up, Aluminum-Rail Hinged Mats: Extruded-aluminum tread rails 1-1/2 inches (38 mm) wide by 3/8 inch (9.5 mm) thick, sitting on continuous vinyl cushions.

1. Tread Inserts: 1/4-inch- (6.4-mm-) high, 28-oz./sq. yd. (950-g/sq. m) weight, level-cut, nylon-pile, fusion-bonded carpet.
2. Colors, Textures, and Patterns of Inserts: Match Owner's sample.
3. Rail Color: Mill finish.
4. Hinges: Aluminum.
5. Mat Size: As indicated.

2.3 FRAMES

A. Recessed Frames: Manufacturer's standard extrusion.

1. Extruded Aluminum: ASTM B 221 (ASTM B 221M), Alloy 6061-T6 or Alloy 6063-T5, T6, or T52.

a. Color: Mill finish.

2.4 CONCRETE FILL AND GROUT MATERIALS

A. Provide concrete grout and fill equivalent in strength to cast-in-place concrete slabs for recessed mats and frames. Use aggregate no larger than one-third fill thickness.

2.5 FABRICATION

A. Floor Mats: Shop fabricate units to greatest extent possible in sizes indicated. Unless otherwise indicated, provide single unit for each mat installation; do not exceed manufacturer's recommended maximum sizes for units that are removed for maintenance and cleaning. Where joints in mats are necessary, space symmetrically and away from normal traffic lanes. Miter corner joints in framing elements with hairline joints or provide prefabricated corner units without joints.

B. Recessed Frames: As indicated, for permanent recessed installation, complete with corner pins or reinforcement and anchorage devices.

1. Fabricate edge-frame members in single lengths or, where frame dimensions exceed maximum available lengths, provide minimum number of pieces possible, with hairline joints equally spaced and pieces spliced together by straight connecting pins.

C. Coat surfaces of aluminum frames that will contact cementitious material with manufacturer's standard protective coating.

2.6 ALUMINUM FINISHES

A. General: Comply with NAAMM's "Metal Finishes Manual for Architectural and Metal Products" for recommendations for applying and designating finishes.

B. Finish designations prefixed by AA comply with the system established by the Aluminum Association for designating aluminum finishes.

PART 3 - EXECUTION

3.1 EXAMINATION

A. Examine substrates and floor conditions for compliance with requirements for location, sizes, minimum recess depth, and other conditions affecting installation of floor mats and frames.

1. Proceed with installation only after unsatisfactory conditions have been corrected.

3.2 INSTALLATION

A. Install recessed mat frames to comply with manufacturer's written instructions. Set mat tops at height recommended by manufacturer for most effective cleaning action; coordinate top of mat surfaces with bottom of doors that swing across mats to provide clearance between door and mat.

1. For installation adjacent to polished concrete flooring areas, provide allowance for grinding and polishing of concrete without grinding surface of recessed frames. Coordinate with other trades as required.
2. Install necessary shims, spacers, and anchorages for proper location and secure attachment of frames.
3. Install grout and fill around frames and, if required to set mat tops at proper elevations, in recesses under mats. Finish grout and fill smooth and level.
4. Install floor grids immediately before Substantial Completion.

3.3 PROTECTION

A. After completing frame installation and concrete work, provide temporary filler of plywood or fiberboard in recesses and cover frames with plywood protective flooring. Maintain protection until construction traffic has ended and Project is near Substantial Completion.

END OF SECTION 124813

SECTION 13 34 19 - METAL BUILDING SYSTEMS

PART 1 GENERAL

1.1 SUMMARY

A. Section Includes:
1. Designed, pre-engineered and shop fabricated structural steel building frame.
2. Metal wall and sloped roof system including soffits, gutters and downspouts.
3. Exterior doors, overhead doors.

B. Foundation Design Related Sections:
1. Section 032000 - Concrete Reinforcement.
2. Section 033000 - Cast-In-Place Concrete.
3. Section 055000 - Metal Fabrications.
4. Section 079200 - Joint Sealers.
5. Section 082613 - Overhead Sectional Door.
6. Section 087100 - Finish Hardware.
7. Section 099000 - Painting and Coating.

1.2 REFERENCES

A. AAMA 101 – Specification for Aluminum Poly (Vinyl Chloride) (PVC) and Wood Windows and Glass doors.

B. AAMA 2603 – Performance Requirements and Test Procedures for Pigmented Organic Coatings on Aluminum Extrusions and Panels.

C. ANSI/AISC 360 – Specification for Structural Steel Buildings.

D. AISC 303 – Code of Standard Practice for Steel Buildings and Bridges.

E. AISI SG-671/2 – Specification for the Design of Cold-Formed Steel Structural Members.

F. ASTM A36/A36M – Carbon Structural Steel.

G. ASTM A123/A123M – Zinc (Hot Dip Galvanized) Coatings on Iron and Steel Products.

H. ASTM A153/A153M – Zinc Coating (Hot-Dip) on Iron and Steel Hardware.

I. ASTM A307 - Carbon Steel Bolts and Studs, 60,000psi Tensile Strength.

J. ASTM A325 – Structural Bolts, Heat Treated, 120/105 ksi Minimum Tensile Strength.

K. ASTM A490 – Structural Bolts Alloy Steel, Heat Treated, 150 ksi Minimum Tensile Strength.

L. ASTM A500 – Normalized High-Strength Low-Alloy Structural Steel Plates.

M. ASTM A501 – Hot-Formed Welded and Seamless Carbon Steel Structural Tubing.

N. ASTM A529/A529M – High-Strength Carbon-Maganese Steel of Structural Quality.

O. ASTM A572/A572M – High-Strength Low-Alloy Columbium-Vanadium Structural Steel.

P. ASTM A653/A653M – Steel Sheet, Zinc-Coated (Galvanized) or Zinc-Iron Alloy-Coated (Galvannealed) by the Hot-Dip Process.

Q. ASTM A792/A792M – Steel Sheet, 55 Percent Aluminum-Zinc Alloy-Coated by the Hot-Dip Process.

R. ASTM A992/A992M – Standard Specification for Structural Steel Shapes.

S. ASTM A1011/A1011M – Steel, Sheet and Strip, Hot-Rolled, Carbon, Structural, High-Strength Low-Alloy, High-Strength Low-Alloy with Improved Formability, and Ultra-High Strength.

T. ASTM C553 – Mineral Fiber Blanket Thermal Insulation for Commercial and Industrial Applications.

U. ASTM C612 – Mineral Fiber Block and Board Thermal Insulation.

V. ASTM C665 – Mineral Fiber Blanket Thermal Insulation for Light-Frame Construction and Manufactured Housing.

W. AWS A2.4 – Standard Symbols for Welding, Brazing and Nondestructive Examination.

X. AWS D1.1 – Structural Welding Code – Steel.

Y. CBC - California Building Code; 2022 Edition.

1.3 SYSTEM DESCRIPTION

A. Clean span rigid frame type and modular rigid frame type supported with intermediate columns as indicated.

B. Primary Framing: Rigid frame of rafter beams and columns, canopy beams, intermediate columns, end wall columns, and wind bracing.

C. Secondary Framing: Purlins, girts, eave struts, flange bracing, sill supports, clips, and other items detailed.

D. Wall and Roof System: Preformed metal panels of indicated profile, with sub-girt framing/anchorage assembly, sag rods, insulation, and accessory components.

E. Roof Slope: 1 inch in 12 inches, unless otherwise indicated.

1.04 SUBMITTALS

A. Submit the following items in accordance with Section 013300 and 013323.

B. Shop Drawings:
   1. Signed and sealed by a Professional Structural Engineer licensed in the State of California.
   2. Indicate markings, quantities, materials, and shapes.
   3. Indicate profiles, cambers, dimensions, spacing and locations.
   4. Indicate openings, cuts, and holes.
   5. Indicate attachments, connections, threaded fasteners, rivets, and welds, including methods of connecting, anchoring, fastening, bracing, and attachment to the Work of other Sections.
   6. Indicate shop and erection details.
   7. Indicate cambers and loads.
   8. Indicate wall and roof system dimensions, panel layout, general construction details, anchorages and methods of anchorage and installation.
   9. Indicate framing anchor bolt settings, sizes, and locations from datum, and foundation loads.
   10. Indicate welded connections with AWS A2.4 welding symbols. Indicate net weld lengths.
   11. Indicate primers, finishes, and other information required for fabrication and erection.
   12. Indicate door and window clear opening sizes and operating requirements.

C. Calculations:
   1. Signed and sealed by a Professional Structural Engineer licensed in the State of California.
   2. Electronic copy of complete structural design calculations to be submitted with shop drawings.
   3. Include vertical loads, seismic loads, and wind loads.
   4. Calculations must be complete and must include roof decks, wall panels, structural members, equipment supports, framing around openings, braces, connections, lateral bracing of equipment, bracing of interior and exterior walls, suspended ceilings, and suspended equipment.
   5. Submit diagrammatic models of each element, clearly cross-referenced to calculations.
   6. Design spread footings at columns. See Geotechnical Report for design parameters.

D. Written Welding Procedures

E. Product Data:
   1. Product data for products and materials indicated.
   2. Manufacturer's technical bulletins and installation/application instructions.
   3. Material Safety Data Sheets (MSDS).
   4. Provide data on profiles, component dimensions, fasteners, and manufacturer's specifications.

F. Certificates:
   1. Manufacturer's Mill Certificate: Submit certificate that products meet or exceed specified requirements.
   2. Mill Test Reports: Submit manufacturer's certificates, indicating structural strength, destructive and nondestructive test analysis.

3. Welder's Certificates: Submit certificates for welders employed on the Work, verifying AWS qualifications within the previous 12 months.
4. Certificates that all bolts supplied and installed meet the requirements of these specifications.

G. Qualification Data:
1. For manufacturer.
2. For installer.

H. Schedules:
1. Submit location and schedule of off-site fabrication.
2. Submit schedule for delivery.

I. Warranties: Sample of special warranties.

1.5 DESIGN REQUIREMENTS

A. General
1. Design must be performed under the direct supervision of and sealed by a Professional Structural Engineer licensed in the State of California and experienced in the design of this type of Work.
2. Structural Steel Sections: Calculate design capacities in accordance with AISC.
3. Cold Formed Sections: Calculate design capacities in accordance with AISI Specification of the Design of Cold Formed Steel Structural Members.
4. Design and fabricate assembly to permit movement of components without buckling, failure of joint seals, undue stress on fasteners or other detrimental effects, when subject to temperature range of 120 degrees F.
5. Design and fabricate wall and roof systems free of distortion or defects detrimental to appearance or performance.
6. Design structure to support monorail system, where indicated.
7. Rigid Frame Buildings: Use bay size as indicated.
8. Roof system must allow the roof covering to move independently of differential thermal movement of the structural framing system.
9. Roof mounted HVAC units are not permitted.

B. Design Vertical Loads:
1. Design for in-place loads generated by the materials used, equipment supported on roofs or walls, equipment suspended from roofs or walls, suspended finishes, and other items indicated to be supported.
2. Design for minimum 5 psf dead load for mechanical piping and ceiling loads in addition to the metal building dead load in buildings not otherwise indicated.
3. Where operating equipment is located on, or suspended from the structure, the design weight of the equipment must be increased 20 percent for impact.
4. In addition to the loads specified above, design structure to support the following minimum live loads, unless greater loads are indicated or required per Code:
   a. Uniform live load on roofs and canopies: 20 psf.
   b. Concentrated load anywhere on the roof deck and canopy deck: 275 pounds.
   c. Uniform live load on walkways, unreducible: 100 psf.
   d. Concentrated load anywhere on walkways: 1,000 pounds.
5. Allowable Deflections Under Dead and Live Load:

a. Structural Members: L/240 of the clear span.
b. Roof and Canopy Decks: L/240 of the center to center span.

6. Allowable Deflections under Live Loads:
   a. Structural members: L/360 of center to center span.

C. Design Wind Loads:
1. Comply with the structural design criteria shown on the drawings.
2. Design and detail skin, roof decks, walls, and roof supporting members for pressure and suction acting perpendicular to the surface.
3. Deflection of skin, roof decks, walls, and roof supporting members for pressure and suction acting perpendicular to the surface must not exceed L/240 of the center to center span.
4. Limit drift due to wind forces, computed at the eave, to 0.005 times the eave height.

D. Design Seismic Loads:
1. Comply with the structural design criteria shown on the drawings.
2. Design structure to carry equipment loads including, but not limited to, mechanical equipment, plumbing, electrical, etc.
3. Design anchorage, support, and seismic bracing of mechanical units, piping, and equipment to resist seismic forces.

E. Lateral Bracing System:
1. Design bracing and connections capable of transferring loads from structure to foundations in a direct manner. Eccentricities must be avoided and must be accounted for where they occur. Wall bracing must clear all openings and not penetrate rated walls.
2. Design a complete and continuous “collector” and “chord” system capable of delivering the code specified lateral forces to the bracing systems. Collector and chord members must be designed to resist axial tension and compression forces in combination with any other loads delivered simultaneously to these members.
3. Design adequate anchorage for overturning forces to the foundations. Coordinate column base plate details with details indicated on Structural Drawings.
4. Lateral Bracing System must consist of concentric diagonal braced frames on member center lines or moment resisting frames. Braces must be steel angle sections.
5. Where moment frames are used in conjunction with braced frames, moment frames must have compatible (equivalent) stiffness to the braced frames, and the “R” value for the most stringent system must be used for computing loads on the entire structure.
6. Roof Diaphragm:
   a. Where tension only braces are used, and where the slenderness ration exceeds 120, design braces for three times the code-specified forces, including the importance factor (I).
   b. Where roof panels are to be used as structural diaphragms to resist wind or seismic forces, roof decks must have an ICC approval and be installed in conformance with ICC requirements. Shear values must not exceed ICC approved values.
7. Slip Critical Bolted Connections: Must be used on all connections subject to seismic load reversals. These connections include, but are not limited to, chords, collectors, braced frames and moment frames.

F. Where applicable to building length, separation for expansion and sliding joints may be provided to allow seismic and thermal movements of framing members in the longitudinal axis of the building.
   1. Double columns are allowed at the separation.
   2. Coordinate locations with Structural Drawings.

1.6 QUALIFICATIONS

A. Manufacturer: Company specializing in manufacturing the products specified in this Section with minimum three (3) years of experience.
   1. Certified under the AISC Quality Certification Program.
   2. ICC Approved.

B. Installer: Company experienced in the installation of metal building systems of similar size; approved by manufacturer.

1.7 COORDINATION

A. Coordinate the design, construction, and installation of metal building structure with the requirements of the Work of other Sections.

B. Provide templates required for accurately locating anchor bolts. Supply the templates in a timely fashion so as not to delay the Work of other Sections. Coordinate placement to verify accurate locations and correct installation.

C. Ensure proper sequencing and fitting of construction. Design Work under direct supervision of a Professional Structural Engineer experienced in design of this work and licensed in the State of California.

1.8 PREINSTALLATION CONFERENCE

A. Convene one week prior to commencing the Work of this Section in accordance with Section 01 31 19.

1.9 FIELD MEASUREMENTS

A. Verify field measurements prior to fabrication and installation.

1.10 DELIVERY, STORAGE AND HANDLING

A. Provide factory wrapping, packaging, and other means necessary to prevent damage or deterioration during shipping, handling, and storage.

B. Do not remove wrappings or protective coatings on prefinished components until the component is ready for installation.

C. Ship, handle, and store components in accordance with manufacturer’s instructions.

D. Store products subject to damage by dirt and moisture in a clean, dry location, off the ground, and suitable protected.

1.11 WARRANTY

A. Special Warranty on Metal Panel Finishes: Manufacturer's standard form in which manufacturer agrees to repair finish or replace metal panels that show evidence of deterioration of factory-applied finishes within specified warranty period.
   1. Exposed Panel Finish: Deterioration includes, but is not limited to, the following:
      a. Color fading more than 5 Hunter units when tested according to ASTM D2244.
      b. Chalking in excess of a No. 8 rating when tested according to ASTM D4214.
      c. Cracking, checking, peeling, or failure of paint to adhere to bare metal.
         1) Finish Warranty Period: 20 years from date of Project Completion.

B. Special Weathertightness Warranty for Standing Seam Metal Roof Panels: Manufacturer's standard form in which manufacturer agrees to repair or replace standing-seam metal roof panel assemblies that leak or otherwise fail to remain weathertight within specified warranty period.
   1. Warranty Period: 20 years from date of Project Completion.

PART 2 PRODUCTS

2.1 MANUFACTURERS

A. American Buildings Company.

B. Butler Builders.

C. Metal Building Company.

D. Star Buildings Systems.

E. Varco Pruden.

2.2 MATERIALS

A. Structural Steel Members: ASTM A36, A572 or A992, Grade 50.

B. Structural Tubing: ASTM A500, Grade B.

C. Plate or Bar Stock: ASTM A572, Grade 50.

D. Sheet Steel Stock: ASTM A653, Grade A; ASTM A792 zinc-aluminum coating on roof; galvanized to ASTM A653 G90 designation where indicated to receive paint finish.

2.3 BUILDING SYSTEM COMPONENTS

A. Girts.

1. Manufacturer's standard rolled formed structural shape meeting specified requirements.
2. Provide minimum one sag rod between spans.

B. Purlins.
1. Rolled formed structural shape.
2. Configuration, Thickness, Spacing: Manufacturer's standard.
3. Depth: Eight inches.
4. Bracing System: Conform to requirements of Metal Building Manufacturer's Association.

C. Internal and External Corners: Same material thickness and finish as adjacent material, profile brake formed to required angles.

D. Blocking and Bracing.
1. Provide purlin (or channel or equal gauge and depth) for closure and support between top of full-height interior partitions and the underside of the roof.
2. Provide blocking behind wall supported equipment and fixtures which occur at the exterior walls.
3. Diagonal Bracing: In accordance with Section 05 50 00 or Section 09 21 16.

E. Flashings, Closure Pieces, Fascia, Infills, Caps, and Trim: Same material and finish as adjacent material, profile to suit system. Provide at rake, corners, and eaves; at framed openings and wherever necessary to provide weather tightness and a finished appearance.

F. EPDM Rubber Boots: Flashing devices around pipe penetrations must be flexible, one-piece devices molded from EPDM rubber. Rubber boot material must be approved by the metal building manufacturer, as compatible with the system. Boots must have base rings fabricated of minimum 0.07-inch-thick aluminum conforming to the contours of the roof panel, to form a weather tight seal.

G. Roof Openings.
1. Openings larger than eight inches round or square: Framed with a welded base fabricated from minimum 0.07-inch-thick aluminum.
2. Support base with roof purlins and header framing.
3. Base must project minimum 12 inches above the roof weather surface; the configuration of the base flanges must match the roof panel.
4. Fasten base flange to provide complete support and weathertightness.

H. Roof Curbs: Minimum 12-inch height; top of curb level; conform to NRCA standards.

I. Ventilators and Ridge Vents: Metal Building Manufacturer's standard; finish to match building.

J. Wall Louvers: Metal building manufacturer's standard type and finish; minimum 12-gauge galvanized steel; self-framing, self-flashing, with integral head gutter; insect or bird screens as indicated with steel mesh screen and frame.

K. Siding.

1. Panel configuration: Building manufacturer's standard, meeting specified requirements; minimum 24-gauge thick; 36-inch net coverage width, 1-1/8-inch deep minimum; sculptured for rigidity.
2. Side Seams: Overlapping and concealed.

L. Roofing.
1. Panel configuration: Provide specified load carrying capabilities and deflection limitations; minimum 16 inches wide; minimum 24-gauge.
2. Seams.
   a. Standing seams with factory applied non-hardening sealant.
   b. Seams must be continuously locked or crimped together by mechanical means.
   c. Panels with lap type longitudinal side joints and exposed fasteners are not acceptable.

M. Building Insulation.
1. Insulation: ASTM C665, glass fiber type with vapor retarder; foil faced; perm rating 0.02 maximum; UL flame spread classification of 25 or less.
2. Exterior Walls: Blanket insulation; Type I, R-19.
   a. Manufacturers:
      1) Guardian Building Products Fiberglass Corporation; Fiberglass FSK-25.
      2) Johns Manville; Flame Resistant FSK-25 Faced Batts.
      3) CertainTeed; Flame Resistant FSK-25 Faced Batts.
3. Roof: Blanket Insulation, Type I, R-30; installed with impaling clips.
   a. Manufacturers:
      1) Guardian Building Products; Fiberglass FSK-25.
      2) Johns Manville; Flame Resistant FSK.
      3) CertainTeed; Flame Resistant FSK.

N. Overhead Doors.
1. Provide in accordance with Section 08 33 23.
2. Overhead door frame must be steel sections braced to building frame in accordance with Section 05 50 00.

O. Hollow Metal Doors and Frames.
1. Provide in accordance with Section 08 11 00.
2. Finish hardware in accordance with Section 08 71 00.

2.4 FASTENERS

A. Anchor Bolts: ASTM A307, unprimed and galvanized to ASTM A153, Class B, as indicated.

B. Bolts, Nuts, and Washers: ASTM A325 or A307, galvanized to ASTM A153, as indicated.

C. Washers: Cast iron or similar brittle material must not be used for washers.

D. Welding Materials: AWS D1.1; type required for materials being welded.

E. Wall and Roof Systems

1. General
   a. Fasteners as indicated to maintain load requirements, and weathertight installation, same finish as cladding, non-corrosive type.
   b. Manufacturer's standard type, galvanized to ASTM A153 2.0 oz/sq. ft., finish to match adjacent surfaces when exterior is exposed.
2. Siding
   a. Over 10 feet Above Grade: Manufacturer's standard screws or bolts.
3. Roofing
   a. Stainless steel screws, bolts, or rivets with weatherseal washers, or carbon steel shank fasteners with vinyl or stainless steel capped heads.

2.5 ACCESSORIES

A. Non-shrink Grout: Non-shrink cementitious grout with 28-day compressive strength of 5,000 psi.

B. Joint Seal Gaskets: Manufacturer's standard.

C. Sealant: As specified in Section 07 92 00, non-staining, elastomeric, skinning.

D. Primer: F9-TT, P636 Red Oxide Primer.

E. Bituminous Paint: Asphaltic type.

2.6 SHOP FABRICATION

A. Fabricate structural steel members in accordance with AISC – Specification for Structural Steel Buildings as indicated.

B. Form exposed Work true to line and level, with accurate angles and surfaces, and straight, sharp edges.

C. Ease exposed edges unless otherwise indicated.

D. Form bent metal corners to smallest radius possible without causing grain separation or other damage to work.

E. Form joints exposed to weather to exclude water.

F. Provide framing for openings. Provide sealant between framing members and wall panel closure panels.

G. Connections.
   1. Make permanent connections in ferrous metal surfaces using welds wherever possible; do not use bolts or screws where they can be avoided. Conceal fastenings where practical.
   2. Shop Welding.
      a. Provide welded connections in shop where possible, unless otherwise indicated, in accordance with AWS D1.1.
      b. Welding must be performed by welders certified to perform the Work.

c. Weld by shield-arc method, submerged-arc method, flux-cored arc method, or other method approved by AWS. Perform welding in accordance with AWS D1.1.
d. Welds exposed to weather or damp conditions in the finished Work must be continuous and watertight and must be treated by hot or cold (field) galvanization.

3. Bolted Connections.
   a. Bolted connections must have not less than two bolts.
   b. Punch, drill, or ream holes 1/16 inch larger than bolt diameter.
4. Anchor Bolts: Assembled with template for casting into concrete. Do not galvanize anchor bolts embedded in concrete.

H. Gutters and Downspouts.
1. Fabricate of same material and finish as roofing metal; minimum 26-gauge unless otherwise indicated.
2. Form gutters and downspouts to profile and size indicated to collect and remove water. Fabricate with connection pieces.
3. Form sections in maximum possible lengths. Hem exposed edges. Allow for expansion at joints.
4. Fabricate support straps of same material and finish as roofing metal, color as selected.

2.7 SHOP ASSEMBLY

A. Preassemble items in the shop to the greatest extent possible to minimize field splicing and assembly.

B. Disassemble units only as necessary for shipping and handling limitations.

C. Clearly mark units for reassembly and installation coordination.

2.8 SHOP FINISHING

A. Framing Members: Clean, prepare, and shop prime. Do not prime surfaces to be field welded.

B. Roof Panels: ASTM A792; zinc-aluminum coating over steel substrate; Galvalume and factory applied thermoset siliconized polyester finish coating system: color selected from manufacturer's standard range.

C. Wall Panels: Factory applied thermoset siliconized polyester finish coating system; color selected from manufacturer's standard range.

2.9 TOLERANCES

A. Tolerances must be in accordance with AISC Code.

PART 3 EXECUTION

3.1 EXAMINATION

A. Verify that field conditions are acceptable and are ready to receive the Work. Notify the Owner's Representative, in writing, of any conditions requiring corrective action.

B. Verify foundation, floor slab, mechanical and electrical utilities are in correct position.

C. If unsatisfactory conditions exist, do not commence the installation until such conditions have been corrected. Beginning of installation means acceptance of existing conditions.

3.2 PREPARATION

A. Verify that field measurements are as indicated on Drawings and reviewed shop drawings. Report any discrepancies to the Owner's Representative for clarification or resolution prior to starting erection.

B. Anchor Bolts.
   1. Upon completion of concrete placement, anchor bolts must be rechecked for correct location and elevations; make necessary corrections.
   2. Projecting portion of anchor bolts must be wire brushed, the washers and nuts replaced, and the bolt protected from dust and other foreign materials by a wrapping of a waterproof material.

C. Protect adjacent, existing, and newly placed construction as necessary to prevent damage during installation of the Work of this Section.

D. Provide bitumastic paint, minimum 15-mil thick, between dissimilar materials to prevent corrosion due to electrolytic action.

3.3 ERECTION - FRAMING

A. Erect framing in accordance with AISC Specification.

B. Provide for erection and wind loads. Provide temporary bracing to maintain structure plumb and in alignment until completion of erection and installation of permanent bracing. Locate braced bays as indicated.

C. Column base plates must be set on steel shims or otherwise supported, and the structure aligned and plumbed prior to grouting under the base plates.

D. Welding.
   1. Welding will be permitted only as indicated on the approved shop drawings.
   2. Welding must be performed by welders certified to perform the Work.
   3. Weld by shield-arc method, submerged-arc method, flux-cored arc method, or other method approved by AWS. Perform welding in accordance with AWS D1.1.
   4. Welds exposed to weather or damp conditions in the finished Work must be continuous and watertight and must be treated by hot or cold (field) galvanization.

E. Bolted Connections.
   1. Bolted connections must have not less than two bolts.

2. Ream unfair holes, but only up to the next larger bolt size.
3. As erection progresses, bolt up the Work to assume dead loads, lateral forces, and erection stresses.

F. Assembly Using Standard Threaded Fasteners
1. Beveled washers: Provide under bolt heads or nuts riding on surfaces exceeding 5 percent slope with respect to head or nut.
2. Tighten bolts for full bearing under heads and nuts and to snug tight condition.

G. After steel is aligned, grout under column base plates and elsewhere indicated to full plate bearing with non-shrink grout.

H. Tack weld the nut and washer to base plate of columns where nut is exposed to view in completed construction.

3.4 ERECTION – WALL AND ROOFING SYSTEMS

A. Install in accordance with manufacturer's instructions.

B. Exercise care when cutting prefinished material to ensure cuttings do not remain on finish surface.

C. Fasten cladding system to structural supports, aligned level and plumb.

D. Locate end laps over supports. End laps minimum 2 inches. Place sidelaps over bearing.

E. Provide expansion joints where indicated.

F. Use exposed fasteners.

G. Provide insulation where indicated.
1. Place roof insulation over roof purlins. Allow insulation to attain full thickness between purlins.
2. Place insulation with vapor barrier to building interior.
3. Fold and staple membrane joints in accordance with manufacturer's instructions.
4. Provide manufacturer's standard netting or other accepted method to hold roof insulation in place.

H. In buildings where wall insulation is exposed, provide 10-foot high wainscot of ¾-inch thick CD Structural, Exposure 1, T&G plywood fastened directly to metal building girts.

I. Roofing.
1. Seams must be continuously locked or crimped together by mechanical means as indicated.
2. Provide resilient gaskets as necessary for complete weather seal.
3. Panels must be fastened to the purlins or secondary support members with a concealed clip or backing device of steel having a protective metallic coating as indicated.
4. Through penetration of the roof surface by exposed fasteners must occur only at terminal locations of roof panels.

5. Except at the concealed fastener, there must be no thermal contact of the roof panels with the supporting purlins.
6. Where roof panels are to be used as structural diaphragms to resist wind or seismic forces, roof decks must be installed in accordance with ICC requirements.

J. Install sealant and gaskets to prevent weather penetration. Seal wall and roof accessories watertight and weather tight with sealant in accordance with Section 07 92 00.

K. The completed structure must be free of rattles, noise due to thermal movement and wind whistles.

3.5 ERECTION – GUTTERS AND DOWNSPOUTS

A. Rigidly support and secure components. Join lengths with formed seams sealed watertight. Flash and seal gutters to downspouts.

B. Apply bituminous paint on surfaces in contact with cementitious materials.

C. Provide positive slope in gutters to downspouts.

D. Install splash blocks.

3.6 FINISHES

A. After erection, prime welds, abrasions, and surfaces not shop primed or galvanized including portions of anchor bolt assemblies not embedded in concrete. Do not treat surfaces to be in contact with concrete and surfaces to receive spray-on fireproofing or insulation.

B. Field paint unpainted field connections, bolts, and similar parts with primer.

3.7 ERECTION TOLERANCES

A. Framing Members: ¼-inch from level; 1/8-inch from plumb.

B. Siding and Roofing: 1/8-inch from true position.

3.8 MANUFACTURER'S FIELD SERVICE

A. Manufacturer's representative must provide inspection services during the Work of this Section.

B. Manufacturer's representative must certify to Owner's Representative that Work has been installed in accordance with manufacturer's instructions.

3.9 CLEANING

A. Remove coverings from the face of siding and refinish surfaces as necessary to prevent rusting and discoloration of finished surfaces.

B. Clean exposed surfaces of the prefinished Work promptly after completion of installation. Comply with coating manufacturer's instructions.

C. After erection, thoroughly clean surfaces of foreign and deleterious matter such as dirt, mud, oil, and grease that could impair bonding of finishes, concrete or fireproofing.

3.10 REPAIR AND ADJUSTMENTS

A. Field cutting, altering, or burning of openings or framing is not permitted.

B. Touch-up shop applied primer using same material.

C. Touch-up minor damage on painted finishes.
   1. Use touch-up paint of type recommended by finish manufacturer.
   2. Minimize overlap to undamaged areas.
   3. Match color, gloss, and appearance of surrounding area.

3.11 DEFECTIVE WORK

A. Building components not conforming to required lines, details, dimensions, tolerances, finishes, strength, or other specified requirements must be considered defective. Notify the Owner's Representative upon discovery of these conditions.

B. Required repair or replacement of defective steel will be determined by Owner's Rep.

C. Do not patch, fill, touch-up, repair, or replace components except upon express direction of the Owner's Representative for each individual area.

D. Defective building components must be repaired or replaced as recommended by the Owner's Representative at no additional expense to the Owner.

3.11 PROTECTION

A. Protect completed structure and building components from damage from subsequent construction operations.

END OF SECTION 133419

SECTION 133419 - METAL BUILDING SYSTEMS

PART 1 - GENERAL

1.1 SECTION INCLUDES:

A. Metal building systems including:

1. Metal framing components.
2. Metal roof panels and trim.
3. Metal building accessories.
4. Sheet metal trim, gutters, downspouts.

1.2 RELATED SECTIONS:

A. Section 053000 – Metal Deck.
B. Section 051200 – Structural Steel Framing
C. Section 054000 – Cold Formed Metal Framing
D. Section 079200 – Joint Sealants.
E. Section 081113 – Hollow Metal Doors and Frames.
F. Section 084113 – Aluminum-Framed Entrances and Storefronts.
G. Section 074113 – Insulated Metal Roof Panel
H. Section 074213 – Insulated Wall Panel

1.3 REFERENCES

A. American Institute of Steel Construction (AISC):

1. AISC 360 - Specification for Structural Steel Buildings, July 7, 2016.AISC 341 - AISC Seismic Provisions for Structural Steel Buildings, July 12, 2016.
2. AISC 303 - Code of Standard Practice for Steel Buildings and Bridges, June 16, 2016.

B. American Iron and Steel Institute (AISI) :

1. AISI S100 - North American Specification for the Design of Cold-Formed Steel Structural Members, 2016 Edition.

C. American Welding Society (AWS)

1. AWS D1.1/D1.1M - Structural Welding Code – Steel, December 9, 2019.
2. AWS D1.3/D1.3M - Structural Welding Code - Sheet Steel, July 12, 2017.

D. American Society of Heating, Refrigeration and Air Conditioning Engineers (ASHRAE):

1. ASHRAE 90.1-2022 - Energy Standard for Buildings Except Low-Rise Residential Buildings (I-P Edition).

E. ASTM International (ASTM): Latest versions of:

1. ASTM A 36/A 36M - Standard Specification for Carbon Structural Steel.
2. ASTM A 475 - Standard Specification for Zinc-Coated Steel Wire Strand.
3. ASTM A 500/A 500M - Standard Specification for Cold-Formed Welded and Seamless Carbon Steel Structural Tubing in Rounds and Shapes.
4. ASTM A 529/A 529M - Standard Specification for High-Strength Carbon-Manganese Steel of Structural Quality.
5. ASTM A 563 - Standard Specification for Carbon and Alloy Steel Nuts.
6. ASTM A 572/A 572M - Standard Specification for High-Strength Low-Alloy Columbium-Vanadium Structural Steel.
7. ASTM A 653/A 653M - Standard Specification for Steel Sheet, Zinc-Coated (Galvanized) or Zinc-Iron Alloy-Coated (Galvannealed) by the Hot-Dip Process.
8. ASTM A 792/A 792M - Standard Specification for Steel Sheet, 55 Percent Aluminum- Zinc Alloy-Coated by Hot-Dip Process.
9. ASTM A 992/A 992M - Standard Specification for Structural Steel Shapes.
10. ASTM A 1011/A 1011M - Standard Specification for Steel, Sheet and Strip, Hot-Rolled, Carbon, Structural, High-Strength, Low-Alloy and High-Strength Low-Alloy with Improved Formability and Ultra-High Strength
11. ASTM A 1018/A 1018A - Standard Specification for Steel, Sheet and Strip, Heavy-Thickness Coils, Hot-Rolled, Carbon, Commercial, Drawing, Structural, High-Strength Low-Alloy, High-Strength Low-Alloy with Improved Formability, and Ultra-High Strength
12. ASTM C 1363 - Standard Test Method for Thermal Performance of Building Materials and Envelope Assemblies by Means of a Hot Box Apparatus.
13. ASTM D 635 - Standard Test Method for Rate of Burning and/or Extent and Time of Burning of Plastics in a Horizontal Position.
14. ASTM D 2240 - Standard Test Method for Rubber Property—Durometer Hardness.
15. ASTM D 2244 - Standard Practice for Calculation of Color Tolerances and Color Differences from Instrumentally Measured Color Coordinates.
16. ASTM D 4214 - Standard Test Methods for Evaluating the Degree of Chalking of Exterior Paint Films.
17. ASTM E 84 - Standard Test Method for Surface Burning Characteristics of Building Materials.
18. ASTM E 72 - Standard Test Methods of Conducting Strength Tests of Panels for Building Construction.
19. ASTM E 1592 - Standard Test Method for Structural Performance of Sheet Metal Roof and Siding Systems by Uniform Static Air Pressure Difference.
20. ASTM E 1646 - Standard Test Method for Water Penetration of Exterior Metal Roof Panel Systems by Uniform Static Air Pressure Difference.
21. ASTM E 1680 - Standard Test Method for Rate of Air Leakage Through Exterior Metal Roof Panel Systems.
22. ASTM F 436 - Standard Specification for Hardened Steel Washers
23. ASTM F 1941 - Standard Specification for Electrodeposited Coatings on Threaded

Fasteners (Unified Inch Screw Threads (UN/UNR))

24. ASTM F 3125 - Standard Specification for High Strength Structural Bolts, Steel and Alloy Steel, Heat Treated, 120 ksi (830 MPa) and 150 ksi (1040 MPa) Minimum Tensile Strength, Inch and Metric Dimensions.

F. Factory Mutual Approvals (FM Approvals):

1. FM 4471 - Approval Standard for Class 1 Panel Roofs.

G. FM Global:

1. FM 1-28 – Property Loss Prevention Data Sheet 1-28, Wind Design, April 2021.

H. International Accreditation Service (IAS):

1. Accreditation Criteria 472 (AC472) - Accreditation Criteria for Inspection Programs for Manufacturers of Metal Building Systems, September 2018.

I. Metal Building Manufacturers Association (MBMA):

1. Metal Building Systems Manual, 2018 Edition.

J. National Fire Protection Association (NFPA):

1. NFPA 285 - Standard Fire Test Method for Evaluation of Fire Propagation Characteristics of Exterior Non-Load-Bearing Wall Assemblies Containing Combustible Components, 2023 Edition.

K. Research Council on Structural Connections (RCSC):

1. Specification for Structural Joints Using High Strength Bolts, June 11, 2020.

L. Underwriters Laboratories (UL):

1. UL-580 - Tests for Uplift Resistance of Roof Assemblies.
2. UL-790 - Standard Test Methods for Fire Tests of Roof Coverings.
3. UL-2218 - Impact Resistance of Prepared Roof Covering Materials.

1.4 ADMINISTRATIVE REQUIREMENTS

A. Pre-installation Meeting: Prior to erection of framing, conduct pre-installation meeting at site attended by Owner, Architect, manufacturer's technical representative, inspection agency and related trade contractors.

B. Coordinate work of Division 07 Sections and "Roof Accessories" and openings and penetrations and manufacturer's accessories with installation of metal panels.

1.5 DEFINITIONS

A. Traditional Metal Building System: Building system using either continuous or simple span "Z" purlins for support of roof covering material.

B. Long Bay System (LBS): Building system using simple span, cold-formed, open web purlins to support roof covering material.

C. Gable Symmetrical: Continuous frame building with ridge in center of building, consisting of tapered or straight columns and tapered or straight rafters. Sidewall girts may be continuous (by-passing columns) or simple span (flush in column line). Rafters may or may not have interior columns.

D. Gable Unsymmetrical: Continuous frame building with an off-center ridge, consisting of tapered or straight columns and tapered or straight rafters. Eave height and roof slope may differ on each side of ridge. Sidewall girts may be continuous (by-passing columns) or simple span (flush in column line). Rafters may or may not have interior columns.

E. Single Slope: Continuous frame building which does not contain ridge, but consists of one continuous slope from side to side. Building consists of straight or tapered columns and tapered or straight rafters. Sidewall girts may be continuous (by-passing columns) or simple span (flush in column line). Rafters may or may not have interior columns.

F. Lean-to (LT): Building extension, which does not contain ridge, but consists of one continuous slope from side to side, usually with same roof slope and girt design as building to which attached.

G. Roof Slope: Pitch expressed as inches of rise for each 12 inches (305 mm) of horizontal run.

H. Acrylic-Coated Galvalume: Aluminum-Zinc coated steel with a thin clear acrylic finish coating eliminating the need for roll-forming oil and reducing incidence of field marking by handling or foot traffic.

I. Building Eave Height: Nominal dimension measured from finished floor to top flange of eave strut.

J. Building Width: Measured from outside to outside of side wall secondary structural member.

K. Building Length: Measured from outside to outside of end wall secondary structural member.

L. Auxiliary Loads: Dynamic loads induced by cranes, conveyors, or material handling systems.

M. Collateral Loads: Weight of any non-moving equipment or material, such as ceilings, electrical or mechanical equipment, sprinkler systems, plumbing, or ceilings.

N. Dead Load: Actual weight of building system as supplied by manufacturer supported by given member.

O. Floor Live Loads: Loads induced on floor system by building occupants and possessions including but not limited to furniture and equipment.

P. Roof Live Loads: Loads produced by maintenance activities, rain, erection activities, and or movable or moving loads but not including wind, snow, seismic, crane, or dead loads.

Q. Roof Snow Loads: Gravity load induced by weight of snow or ice on roof, assumed to act on horizontal projection of roof.

R. Seismic Loads: Loads acting in any direction on structural system due to action of an earthquake.

S. Wind Loads: Loads on structure induced by forces of wind blowing from any horizontal direction.

1.6 DESIGN REQUIREMENTS

A. Governing Design Code: Structural design for the metal building system shall be performed by the manufacturer of the metal building system in accordance with the building code provided in the contract documents.

B. Design Basis:

1. Use standards, specifications, recommendations, findings, and interpretations of professionally recognized groups as basis for establishing design, drafting, fabrication, and quality criteria, practices, and tolerances, including the AISC Code of Standard Practice for Steel Buildings and Bridges.
2. Design structures in accordance with MBMA Practices and Manual including fabrication and erection tolerances.
3. Design structural mill sections and welded plate sections in accordance with AISC 360, ASD Method.
4. Design the lateral force resisting systems and related components for seismic loads in accordance with AISC 341.
5. Design cold-formed steel structural members and panels in accordance with AISI S-100.
6. Design all bolted joints in accordance with RCSC Specification.

C. Design Loads:

1. In accordance with Contract Documents and manufacturer's standard design practices.
2. Design loads include dead loads, roof live loads, wind loads, seismic loads, collateral loads, auxiliary loads, floor live loads and applied or specified loads.

3. Design loads include dead loads, roof live loads, wind loads, seismic loads, collateral loads, auxiliary loads, floor live loads and applied or specified loads as required by MBMA's "Metal Building Systems Manual.".
   a. Live Loads: Include vertical loads induced by the building occupancy indicated on Drawings. Include loads induced by maintenance workers, materials, and equipment for roof live loads.
   b. Wind Loads: Include horizontal loads induced by a basic wind speed corresponding to a 10-year, mean-recurrence interval at Project site regional location.
   c. Collateral Loads: Include additional dead loads other than the weight of metal building system for permanent items such as sprinklers, mechanical systems, electrical systems, and ceilings.
   a. Auxiliary Loads: Include dynamic live loads, such as those generated by cranes and materials-handling equipment indicated on Drawings.
   b. Load Combinations: Design metal building systems to withstand the most critical effects of load factors and load combinations as required by MBMA's "Metal Building Systems Manual."
   c. Deflection Limits: Engineer assemblies to withstand design loads with deflections no greater than the following:
   d. Purlins and Rafters: Vertical deflection of 1/360 of the span.
   e. Girts: Horizontal deflection of 1/360 of the span.
   f. Metal Roof Panels: Vertical deflection of 1/240 of the span.
   g. Metal Wall Panels: Horizontal deflection of 1/240 of the span.

D. Thermal Movements: Provide metal panel systems that allow for thermal movements resulting from the following maximum change (range) in ambient and surface temperatures by preventing buckling, opening of joints, overstressing of components, failure of joint sealants, failure of connections, and other detrimental effects. Base engineering calculation on surface temperatures of materials due to both solar heat gain and nighttime-sky heat loss.
   1) Temperature Change (Range): 120 deg F, ambient; 180 deg F, material surfaces.

E. Thermal Performance: Provide insulated metal panel assemblies with the following minimum R-values for opaque elements when tested according to ASTM C 1363 or ASTM C 518:
   1) Metal Roof Panel Assemblies:
      - R-Value: 13.+ 13 CI
   2) Metal Wall Panel Assemblies:
      - R-Value: 13 +7.5 CI

F. Air Infiltration for Metal Roof Panels: Air leakage through assembly of not more than 0.06 cfm/sq. ft. of roof area when tested according to ASTM E 1680 at negative test-pressure difference of 1.57 lbf/sq. ft.

G. Water Penetration for Metal Roof Panels: No water penetration when tested according to ASTM E 1646 at test-pressure difference of 2.86 lbf/sq. ft.

1.7 SUBMITTALS

A. Submittals for Review:

1. Shop Drawings:

   a. Signed and sealed by a Professional Structural Engineer licensed in the State of California.
   b. Indicate markings, quantities, materials, and shapes.
   c. Indicate profiles, cambers, dimensions, spacing and locations.
   d. Indicate openings, cuts, and holes.
   e. Indicate attachments, connections, threaded fasteners, rivets, and welds, including methods of connecting, anchoring, fastening, bracing, and attachment to the Work of other Sections.
   f. Indicate shop and erection details.
   g. Indicate cambers and loads.
   h. Indicate wall and roof system dimensions, panel layout, general construction details, anchorages and methods of anchorage and installation.
   i. Indicate framing anchor bolt settings, sizes, and locations from datum, and foundation loads.
   j. Indicate welded connections with AWS A2.4 welding symbols. Indicate net weld lengths.
   k. Indicate primers, finishes, and other information required for fabrication and erection.
   l. Indicate door and window clear opening sizes and operating requirements.

2. Manufacturer installation manual showing:

   a. Preparation instructions and recommendations.
   b. Storage and handling requirements and recommendations.
   c. Installation methods.

3. Structural Design Calculations:

   a. Signed and sealed by a Professional Structural Engineer licensed in the State of California.
   b. Electronic copy of complete structural design calculations to be submitted with shop drawings.
   c. Include vertical loads, seismic loads, and wind loads.
   d. Calculations must be complete and must include roof decks, wall panels, structural members, equipment supports, framing around openings, braces, connections, lateral bracing of equipment, bracing of interior and exterior walls, suspended ceilings, and suspended equipment.
   e. Submit diagrammatic models of each element, clearly cross-referenced to calculations.
   f. Design spread footings at columns. See Geotechnical Report for design parameters.

4. Written Weld Procedures

5. Product Data:

   a. Product data for products and materials indicated.

b. Manufacturer's technical bulletins and installation/application instructions.
c. Material Safety Data Sheets (MSDS).
d. Provide data on profiles, component dimensions, fasteners, and manufacturer's specifications.

6. Certificates:
   a. Manufacturer's Mill Certificate: Submit certificate that products meet or exceed specified requirements.
   b. Mill Test Reports: Submit manufacturer's certificates, indicating structural strength, destructive and nondestructive test analysis.
   c. Welder's Certificates: Submit certificates for welders employed on the Work, verifying AWS qualifications within the previous 12 months.
   d. Certificates that all bolts supplied and installed meet the requirements of these specifications.

7. Qualification Data:
   a. For manufacturer.
   b. For installer.

8. Documentation supporting Thermal Transmission Coefficients (U-factors) and Solar Heat Gain Coefficients (SHGC; for non-opaque components only) of building envelope components specified in this section.

B. Samples:

1. Submit color chips showing manufacturer's full range of available colors and patterns for each finish product.
2. After color selection submit samples representing actual product, color, and patterns.

C. Quality Control Submittals:

1. IAS AC472 Certificate for each facility involved in the design and fabrication of the Metal Building System.
2. Certified Erector Certificate issued to the erector by the manufacturer.

3. Material Test Reports (MTR) for all steel material used in the manufacture of primary and secondary framing members, panels and bolts specified in this section and when required by ASTM A 6/A 6M

1.8 QUALITY ASSURANCE

A. Manufacturer and Fabricator Qualifications: Primary products furnished by single IAS AC472 accredited manufacturer/fabricator with minimum 5 years of experience.

B. Erector Qualifications:

1. Single installer with minimum 5 years of experience in installing products of same or similar type and scope.
2. Installer must be certified by the metal building manufacturer.

1.9 DELIVERY, STORAGE AND HANDLING

A. Store packaged products in original, unopened packaging until ready for installation.

B. Store and dispose of solvent-based materials and materials used with solvent-based materials in accordance with requirements of the authority having jurisdiction.

C. Protect steel products from weather as specified by manufacturer instructions.

1.10 PROJECT CONDITIONS

A. Do not install systems when temperature, humidity, or ventilation is outside of limits recommended by manufacturer.

1.11 WARRANTIES

A. Special Manufacturer's Warranty: On manufacturer's standard form, in which manufacturer agrees to repair or replace metal building system components that fail in materials and workmanship within one year from date of Substantial Completion.
B. Special Weathertightness Warranty: On manufacturer's standard form, in which manufacturer agrees to repair or replace metal building system components that fail to remain weathertight, including leaks, without monetary limitation within 20 years from date of Substantial Completion.
C. Special Panel Finish Warranty: On Manufacturer's standard form, in which Manufacturer agrees to repair or replace metal panels that evidence deterioration of factory-applied finish within 10 years from date of Substantial Completion, including:

1. Fluoropolymer Two-Coat System (PVDF):

a. Color fading in excess of 10 Hunter units per ASTM D 2244 for 25 years.
b. Chalking in excess of No. 8 rating per ASTM D 4214 for 25 years.
c. Failure of adhesion, peeling, checking, or cracking for 40 years.

PART 2 - PRODUCTS

2.1 MANUFACTURERS

A. Basis of Design Manufacturer: Star Building Systems, part of the Cornerstone Building Brands family. (www.StarBuildings.com). Other acceptable manufacturers include, but are not limited to the following:

1. Ceco Building Systems, part of the Cornerstone Building Brands family (www.CecoBuildings.com)
2. Metallic Building Systems, part of the Cornerstone Building Brands family (www.Metallic.com)
3. Robertson Buildings, part of the Cornerstone Building Brands family (www.RobertsonBuildings.com)

B. Substitutions: Not permitted.

2.2 MATERIALS

A. Primary Framing Steel:

1. Recycled Content: Post-consumer recycled content plus one-half of pre-consumer recycled content not less than 75 percent.
2. Hot-rolled shapes: ASTM A 36 or ASTM A 992, minimum yield of 36 ksi (248 MPa) or 50 ksi (345 MPa).
3. Built-up sections:

   a. Webs:

      1) ASTM A 1011 or ASTM A1018, SS or HSLAS, Grade 55 (380) for webs 3/16 inch (4.76 mm) thick and thinner.
      2) ASTM A 572 Grade 50 (340) or ASTM A572 Grade 55 (380) or ASTM A 529 Grade 55 for webs thicker than 3/16 inch (4.76 mm).

   b. Flanges: ASTM A 529 Grade 55 (380) or ASTM A 572 Grade 50 (340) or 55 (380).

4. Round tube: ASTM A 500, Grade B or C with minimum yield strength of 42 ksi (290 MPa).
5. Square and rectangular tube: ASTM A 500, Grade B or C, minimum yield strength of 42 ksi (290 MPa).
6. Cold-formed C sections: ASTM A 1011, Grade 55 (380), or ASTM A 653, Grade 55 (380).
7. X-bracing: ASTM A 529 or A 572 for rod bracing 36 ksi (248 MPa) or 50 ksi (345 MPa), ASTM A 36 for angle bracing or ASTM A 475 for cable bracing.

B. Secondary Framing Steel:

1. Purlins, girts, and eave struts: ASTM A 1011 Grade 55 (380), or ASTM A 653, Grade 55 (380).
2. Recycled Content: Post-consumer recycled content plus one-half of pre-consumer recycled content not less than 25 percent.

3. Thickness:

a. 16 gauge: 0.056 inch (1.421 mm) minimum uncoated thickness.
b. 14 gauge: 0.067 inch (1.689 mm) minimum uncoated thickness.
c. 13 gauge: 0.081 inch (2.051 mm) minimum uncoated thickness.
d. 12 gauge: 0.100 inch (2.534 mm) minimum uncoated thickness.

4. Finish: Red Gray shop coat. Shop coat only intended to provide temporary protection during transportation and erection.

C. Panels: Interior Liner Wall Panels:

1. Thickness: 1 ½" PBR Wall panels,
2. Panel Gauge: 24 gauge: 0.0212 inch (0.538 mm) minimum uncoated thickness, 50 ksi (340 MPa) yield strength.
3. Finishes:
   a. Fluoropolymer Two-Coat System (PVDF): 0.2 – 0.3 mil primer with 0.7 - 0.8 mil 70 percent PVDF fluoropolymer color coat. Basis of Design: Signature 300.

3. Fasteners: for interior wall panel only

   a. Through-fastened panels: Self-drilling with sealing washer.
   b. Clips to purlin or bar joists: Long-life self-drilling with hex washer head and washer.

4. Clips:

   a. Low or high fixed clips: Use where moderate thermal expansion and contraction in roof panel is expected.
   b. Low or high sliding clips: Provide 2 to 4 inches of travel for panel thermal expansion and contraction.

5. Sealants and closures:

   a. Side-laps: Factory applied, hot melt, foamable mastic.
   b. End-laps, eave, ridge assembly, gable flashings: Field-applied non-skinning sealant as specified in Section 079200.
   c. Standing Seam Roof Closures:

      1) Outside closures: 24 gauge steel sheet.
      2) Inside closures: 18 gauge Galvalume or G-40 galvanized coated steel complying with ASTM A 653/A 653M.

   d. Through-Fastened Roof Closures: Provide closed-cell polyethylene inside [and outside] foam closures.

      1) Bulk Density: 2 pounds per cubic foot.

2) Service Temperature: -100 to 180 degrees Fahrenheit.
3) Shore Hardness: 7 on AA scale or 51 on 00 scale when tested to ASTM D 2240.

2.3 PRIMARY FRAMING

A. Frame Design: As indicated on Drawings.

B. Sidewall Column Profile: Tapered at the apparatus bay & straight everywhere else, As indicated on Drawings.

C. Frame Span: Modular Span as indicated on Drawings.

D. Modular Frame Interior Column Profile: W Shape, or Tube As indicated on Drawings.

E. Bracing: Portal Frames as allowed by accessories X-Bracing if required Shear Walls by others.

2.4 SECONDARY FRAMING

A. Roof Zee Purlins:

1. Horizontal structural members which support roof coverings.
2. Depth: As required by design, 8 inches minimum.
3. Thickness: As required by design, 16 gauge minimum.
4. Finish: Gray shop coat. Shop coat only intended to provide temporary protection during transportation and erection.

B. Long Bay Purlins:

1. Horizontal structural members that support roof systems, with virtual square shaped top and bottom chords and web members.
2. Open Web Purlins for Long Bay applications.
3. Finish: Gray shop coat. Shop coat only intended to provide temporary protection during transportation and erection.

C. Wall Zee Girts
1. Horizontal structural members that support vertical panels.
2. Depth: As required by design, 8inches minimum.
3. Gauge: As required by design, 16 gauge (0.056 inch (1.424 mm) minimum uncoated thickness).
4. Finish: Gray shop coat. Shop coat only intended to provide temporary protection during transportation and erection.

D. Spandrel Beams: ASTM A 36/A 36M or ASTM A 992/A 992M wide flange shapes,

minimum yield 50 ksi for support of wall systems provided by others, as required by design.

2.5 BOLTS

A. Rigid Frame Connections: Provide High Strength Bolts, Nuts and Washers:

1. Bolts: ASTM F 3125 Grade A325 Heavy Hex Structural Type I.
2. Washers: ASTM F 436 Type 1 Hardened Steel.
3. Nuts: ASTM A 563 Grade C Heavy Hex. Nuts shall be wax coated by emulsion such that the torque required to complete a Rotational Capacity (RC) test shall be reduced by 40% from the un-waxed state.
4. Coating: Hot-Dipped Galvanized.

B. Other Connections: Provide High Strength or Machine Bolts as required by manufacturer design:

1. High Strength Bolts and Nuts:

a. Bolts: ASTM F 3125 Grade A325 Heavy Hex Structural Type I.
b. Nuts: ASTM A 563 Grade C Heavy Hex.
c. Coating: ASTM F 1941 Electrodeposited Yellow Zinc.

2. Machine Bolts:

a. Bolts: ASTM A 307 Grade Carbon Steel.
b. Nuts: ASTM A 563 Grade A Hex Nut.
c. Coating: ASTM F 1941 Electrodeposited Clear Zinc.

2.6 ROOF SYSTEM

A. Foam Insulated Metal Panels

1. Basis of Design Manufacturer: Metl-Span, CFR insulated Metal Panel

2. Labeling: Labeled through a nationally recognized program, identifying the manufacturer, product name and model and product listings required in this section.

3. Panel Core: Foamed in-place, Zero Ozone Depletion Potential polyurethane or polyisocyanurate.

4. Fire Resistance:
a. Flame Spread and Smoke Developed Index: The Flame Spread Index shall not exceed 25 and the Smoke Developed Index shall not exceed 450 when tested to ASTM E 84

5. Panel Strength: Determine and certify panel allowable strengths as follows:
a. Positive Loading (Toward Panel Supports): Determine in accordance with

ASTM E 72.
b. Negative Loading (Away from Panel Supports): Determine in accordance with ASTM E 1592

6. U-Factor Determination: ASTM C 1363 conducted in accordance with ASHRAE 90.1 Section A9.3.2 or by Finite Element Modeling per ASHRAE 90.1 Section A9.4 and using core insulation thermal conductivity (k-factor) determined using ASTM C 518 conducted at 75 degree F mean temperature in the calculation

7. Standing Seam Insulated Roof Panels
   a. Panel profile: CFR
   b. Panel Thickness: Refer to division 074113 Part 2.3
   c. Panel Width: Refer to division 074113 Part 2.3
   d. Exterior Face:
      1) Profile: Stucco embossed 1/8" (3.2mm) Mesa symmetrical ribs nominally 4 inches (10mm) on centers with 2" vertical leg standing seam side laps.
      2) Sheet Thickness: Refer to division 074113 Part 2.3
      3) Finish: Refer to division 074113 Part 2.3
      4) Color : Refer to division 074113 Part 2.3
   e. Interior Face
      1) Profile: Stucco embossed 1/8" (3.2mm) Mesa symmetrical ribs nominally 4 inches (10mm) on centers with 2" vertical leg standing seam side laps
      2) Sheet Thickness: Refer to division 074113 Part 2.3
      3) Finish: Refer to division 074113 Part 2.3
      4) Color: Refer to division 074113 Part 2.3
   f. Maximum U-factor: BTU/hour-square foot-degree F
   g. Air Infiltration: Maximum air infiltration of 0.04 cubic feet per minute per square foot of specimen area when tested to ASTM E 1680 at a pressure differential of +/- 1.57 psf (75 Pa)
   h. Water Infiltration: No uncontrollable water leakage when tested to ASTM E 1646 at a 20 psf (955 Pa) pressure differential when sprayed with 5 gallons of water per hour per square foot (203 liters per square meter) of specimen area.

2.7 ROOFING ACCESSORIES

1. Pipe Flashing
2. Roof Curbs
3. Roof Vents
4. Gutter and Downspout shown as in drawing

2.8 WALL, LINER, SOFFIT, AND FASCIA PANEL SYSTEMS

A. Assembly Performance Requirements: Provide assemblies that function as exterior walls that meet the following requirements:

1. Air Infiltration: Maximum air infiltration of 0.04 cubic feet per minute per square foot of specimen area when tested to ASTM E 283 at a pressure differential of +/- 1.57 psf (75 Pa).
2. Water Infiltration: No uncontrollable water leakage when tested to ASTM E 331 at a 6.24 psf pressure differential when sprayed with 5 gallons of water per hour per square foot of specimen area.

B. Assembly Performance Requirements:

1. Basis of Design Manufacturer: Metl-Span, CF Mesa/CFR

2. Labeling: Labeled through a nationally recognized program, identifying the manufacturer, product name and model and product listings required in this section.

3. Panel Core: Foamed in-place, Zero Ozone Depletion Potential polyurethane or polyisocyanurate.

4. Fire Resistance:
   a. Third-party listed assembly tested to and meeting the requirements of NFPA 285.

5. Panel Strength: Determine and certify panel strength as follows:
   a. Positive Loading (Toward Panel Supports): Determine in accordance with ASTM E 72.
   b. Negative Loading (Away from Panel Supports): Determine in accordance with ASTM E 1592.Finish: PVDF.

6. U-Factor Determination: ASTM C 1363 conducted in accordance with ASHRAE 90.1 Section A9.3.2 or by Finite Element Modeling per ASHRAE 90.1 Section A9.4 and using core insulation thermal conductivity (k-factor) determined using ASTM C 518 conducted at 75 degree F mean temperature in the calculationPanel fasteners: Long-life finish.
7. Concealed Fastener Insulated Panels:
   a. Panel profile: Metl-Span/ CF Mesa & CFR
   b. Panel Thickness: Refer to division 074213 Part 2.3
   c. Panel Width: Refer to division 074213 Part 2.3
   d. Exterior Face Color : Refer to division 074213 Part 2.3
   e. Interior Face Color: Refer to division 074213 Part 2.3

C. Accessories
1. Base condition:
   a. Formed base: Pre-finished bronze, self-flashing, for through-fastened panels.
   b. Base member: Angle
   c. Base member flashing: As indicated on Drawings
2. Framed openings:
   a. Finish: Match girt finish
   b. Framed opening trim: Standard jamb, head, sill trim package
   b. Trim profiles: [Manufacturer’s standard profiles

2.9 FABRICATION

A. General:

1. Shop-fabricate framing members for field bolted assembly.
2. Surfaces of bolted connections: Smooth and free from burrs and distortions.
3. Shop connections to conform to manufacturer's standard design practices.
4. Mark framing members with identifying mark.
5. Welding to conform to AWS D1.1 and AWS D1.3 as applicable.

B. Primary Framing:

1. Plates, stiffeners, and related members: Factory welded base plates, splice plates, cap plates, and stiffeners into place on structural members.
2. Bolt holes and related machining: Shop fabricate base plates, splices and flanges to include bolt connection holes. Shop-fabricate webs to include bracing holes.
3. Secondary structural connections (purlins and girts): Ordinary (not pretensioned) bolted connections with welded clips.
4. Welding inspection: Per IAS AC472 Part A

C. Zee Purlins:

1. Fabricate purlins from cold-formed Z-shaped sections with stiffened flanges.
2. Size flange stiffeners to comply with requirements of AISI S100.
3. Purlin flanges unequal in width for easier nesting during erection.
4. Purlins pre-punched at factory to provide for field bolting to rigid frame clips.

D. Eave Struts:

1. Fabricate eave struts from cold-formed unsymmetrical C-shaped sections with stiffened flanges.
2. Size flange stiffeners to comply with requirements of AISI S100.
3. No welded splices permitted.
4. Eave Struts pre-punched at factory to provide for field bolting to rigid frame clips.

E. Girts: Simple or continuous span as required by design. Connection bolts will install through webs, not flanges

F. Bracing:

1. Diagonal Bracing:

a. Diagonal bracing in roof and sidewalls may be used to resist longitudinal loads in structure when panel diaphragm cannot be used.
b. Furnish to length and equipped with hillside washers and nuts at each end.
c. Bracing may consist of rods threaded at each end or galvanized cable with suitable threaded end anchors.
d. If load requirements dictate, bracing may be of structural angle or pipe, bolted

in place.

2. Special Bracing:

   a. When diagonal bracing is not permitted in sidewall use rigid frame type portal or fixed base column.
   b. Shear walls may be used where adequate to resist applied wind or seismic forces.

3. Flange Braces: Brace compression flange of primary framing laterally with angles connecting to purlin or girt webs so that flange compressive stress is within allowable limits for any combination of loading.
4. Bridging:

   a. Laterally brace top chord of long bay purlins with horizontal bridging if roof system being used will not supply adequate lateral support to top chord.

5. Horizontally bridge bottom chord for lateral bracing. One row of bolted diagonal bridging required for long span purlins 40 feet (12 192 mm) long and longer.

PART 3 - EXECUTION

3.1 EXAMINATION

A. Verify that field conditions are acceptable and are ready to receive the Work. Notify the Owner's Representative, in writing, of any conditions requiring corrective action.

B. Verify foundation, floor slab, mechanical and electrical utilities are in correct position.

C. If unsatisfactory conditions exist, do not commence the installation until such conditions have been corrected. Beginning of installation means acceptance of existing conditions.

3.2 PREPARATION

A. Verify that field measurements are as indicated on Drawings and reviewed shop drawings. Report any discrepancies to the Owner's Representative for clarification or resolution prior to starting erection.

B. Anchor Bolts.
   1. Upon completion of concrete placement, anchor bolts must be rechecked for correct location and elevations; make necessary corrections.
   2. Projecting portion of anchor bolts must be wire brushed, the washers and nuts replaced, and the bolt protected from dust and other foreign materials by a wrapping of a waterproof material.

C. Protect adjacent, existing, and newly placed construction as necessary to prevent damage during installation of the Work of this Section.

D. Provide bitumastic paint, minimum 15-mil thick, between dissimilar materials to prevent corrosion due to electrolytic action.

3.3 ERECTION - FRAMING

A. Erect framing in accordance with AISC Specification.

B. Provide for erection and wind loads. Provide temporary bracing to maintain structure plumb and in alignment until completion of erection and installation of permanent bracing. Locate braced bays as indicated.

C. Column base plates must be set on steel shims or otherwise supported, and the structure aligned and plumbed prior to grouting under the base plates.

D. Welding.
1. Welding will be permitted only as indicated on the approved shop drawings.
2. Welding must be performed by welders certified to perform the Work.
3. Weld by shield-arc method, submerged-arc method, flux-cored arc method, or other method approved by AWS. Perform welding in accordance with AWS D1.1.
4. Welds exposed to weather or damp conditions in the finished Work must be continuous and watertight and must be treated by hot or cold (field) galvanization.

E. Bolted Connections.
1. Bolted connections must have not less than two bolts.
2. Ream unfair holes, but only up to the next larger bolt size.
3. As erection progresses, bolt up the Work to assume dead loads, lateral forces, and erection stresses.

F. Assembly Using Standard Threaded Fasteners
1. Beveled washers: Provide under bolt heads or nuts riding on surfaces exceeding 5 percent slope with respect to head or nut.
2. Tighten bolts for full bearing under heads and nuts and to snug tight condition.

G. After steel is aligned, grout under column base plates and elsewhere indicated to full plate bearing with non-shrink grout.

H. Tack weld the nut and washer to base plate of columns where nut is exposed to view in completed construction.

3.4 ERECTION – WALL AND ROOFING SYSTEMS

A. Install in accordance with manufacturer’s instructions.

B. Exercise care when cutting prefinished material to ensure cuttings do not remain on finish surface.

C. Fasten cladding system to structural supports, aligned level and plumb.

D. Locate end laps over supports. End laps minimum 2 inches. Place sidelaps over bearing.

E. Provide expansion joints where indicated.

F. Use exposed fasteners.

G. Provide insulation where indicated.
   1. Place roof insulation over roof purlins. Allow insulation to attain full thickness between purlins.
   2. Place insulation with vapor barrier to building interior.
   3. Fold and staple membrane joints in accordance with manufacturer's instructions.
   4. Provide manufacturer's standard netting or other accepted method to hold roof insulation in place.

H. In buildings where wall insulation is exposed, provide 10-foot high wainscot of ¾-inch thick CD Structural, Exposure 1, T&G plywood fastened directly to metal building girts.

I. Roofing.
   1. Seams must be continuously locked or crimped together by mechanical means as indicated.
   2. Provide resilient gaskets as necessary for complete weather seal.
   3. Panels must be fastened to the purlins or secondary support members with a concealed clip or backing device of steel having a protective metallic coating as indicated.
   4. Through penetration of the roof surface by exposed fasteners must occur only at terminal locations of roof panels.
   5. Except at the concealed fastener, there must be no thermal contact of the roof panels with the supporting purlins.
   6. Where roof panels are to be used as structural diaphragms to resist wind or seismic forces, roof decks must be installed in accordance with ICC requirements.

J. Install sealant and gaskets to prevent weather penetration. Seal wall and roof accessories watertight and weather tight with sealant in accordance with Section 07 92 00.

K. The completed structure must be free of rattles, noise due to thermal movement and wind whistles.

3.5 ERECTION – GUTTERS AND DOWNSPOUTS

A. Rigidly support and secure components. Join lengths with formed seams sealed watertight. Flash and seal gutters to downspouts.

B. Apply bituminous paint on surfaces in contact with cementitious materials.

C. Provide positive slope in gutters to downspouts.

D. Install splash blocks.

3.6 FINISHES

A. After erection, prime welds, abrasions, and surfaces not shop primed or galvanized including portions of anchor bolt assemblies not embedded in concrete. Do not treat surfaces to be in contact with concrete and surfaces to receive spray-on fireproofing or insulation.

B. Field paint unpainted field connections, bolts, and similar parts with primer.

3.7 ERECTION TOLERANCES

A. Framing Members: ¼-inch from level; 1/8-inch from plumb.

B. Siding and Roofing: 1/8-inch from true position.

3.8 MANUFACTURER'S FIELD SERVICE

A. Manufacturer's representative must provide inspection services during the Work of this Section.

B. Manufacturer's representative must certify to Owner's Representative that Work has been installed in accordance with manufacturer's instructions.

3.9 CLEANING

A. Remove coverings from the face of siding and refinish surfaces as necessary to prevent rusting and discoloration of finished surfaces.

B. Clean exposed surfaces of the prefinished Work promptly after completion of installation. Comply with coating manufacturer's instructions.

C. After erection, thoroughly clean surfaces of foreign and deleterious matter such as dirt, mud, oil, and grease that could impair bonding of finishes, concrete or fireproofing.

3.10 REPAIR AND ADJUSTMENTS

A. Field cutting, altering, or burning of openings or framing is not permitted.

B. Touch-up shop applied primer using same material.

C. Touch-up minor damage on painted finishes.
   1. Use touch-up paint of type recommended by finish manufacturer.
   2. Minimize overlap to undamaged areas.
   3. Match color, gloss, and appearance of surrounding area.

3.11 DEFECTIVE WORK

A. Building components not conforming to required lines, details, dimensions, tolerances, finishes, strength, or other specified requirements must be considered defective. Notify the Owner's Representative upon discovery of these conditions.

B. Required repair or replacement of defective steel will be determined by Owner's Rep.

C. Do not patch, fill, touch-up, repair, or replace components except upon express direction of the Owner's Representative for each individual area.

D. Defective building components must be repaired or replaced as recommended by the Owner's Representative at no additional expense to the Owner.

3.11 PROTECTION

A. Protect completed structure and building components from damage from subsequent construction operations.

END OF SECTION

SECTION: 134713 – BULLET−RESISTANT FIBERGLASS PANELS

PART 1 − GENERAL

1.1 RELATED DOCUMENTS

A. Drawings and general provisions of the Contract, including General and Supplementary Conditions.

1.2 REFERENCES

A. Underwriters Laboratories:
   1. UL 752 Specifications and Ammunition, 11th Edition, Standard for Bullet Resisting Equipment published September 9, 2005, revised December 21, 2006, Level 3
B. National Institute of Justice Ballistic Standards:
   1. NIJ Standard 0108.01 – Type III−A
C. American Society for Testing and Materials:
   1. ASTM E119−98 Standard Test for One−Hour Fire−Rating of Building Construction and Materials
   2. ASTM F1233−98 Standard Test Method for Forced Entry Testing of Materials/Assemblies

1.3 SUBMITTALS

The following shall be submitted in accordance with Section 13 4713 and the SPECIAL CONTRACT REQUIREMENTS (Submit for approval prior to fabrication samples, brochures, specifications):

A. UL LISTING Verification and UL752 Current Test Results as provided by Underwriters Laboratories.
B. Printed data in sufficient detail to indicate compliance with the contract documents.
C. ASTM E119−98 One−Hour Fire Rating of Building Construction and Materials.
D. ASTM F1233−98 Standard Test Method for Forced Entry Testing of Materials/Assemblies.
E. Manufacturer's Instructions for installation of Bullet Resistant Fiberglass Panels.

1.4 DESIGN

A. Through the design, manufacturing technique and material application the Bullet Resistant Fiberglass shall be of the "non ricochet type." This design is intended to permit the encapture and retention of an attacking projectile lessening the potential of a random injury or lateral penetration.

1.7 DELIVERY, HANDLING, AND STORAGE

A. Deliver the materials to the project with the manufacturer's UL LISTED Labels intact and legible.
B. Handle the material with care to prevent damage. Store the materials inside under cover, stack flat and off the floor.

1.8 WARRANTY

A. All materials and workmanship shall be warranted against defects for a period of two (2) years from the date of receipt at the project site.

PART 2 − PRODUCTS

2.1 MANUFACTURER

A. Acceptable Manufacturers:
   1. Waco Composites, Ltd., Waco, TX 76710, fax: 254−752−3634, 254−752−3622 email: sales@armorcore.com

2.2 MATERIAL

A. The panels shall be made of multiple layers of woven roving ballistic grade fiberglass cloth impregnated with a thermoset polyester resin and compressed into flat rigid sheets. The production technique and materials used shall provide the controlled internal delamination to defeat the penetrating projectile.
B. Bullet Resistant Fiberglass panels: 7/16” nominal thickness, and 4.8 lbs. per sq. ft. nominal weight.

2.3 SECURITY LEVEL

A. The Bullet Resistant Fiberglass will be warranted to meet the requirements of UL752 Level 3.

PART 3 −

EXECUTION

3.1 SUPPORTING MEMBERS

A. Prior to installing the bullet resistive material the contractor shall verify that all supports have been installed as required by the contract documents and the architectural drawings.

3.2 JOINTS

A. All joints shall be reinforced by a back−up layer of bullet resistive material. The bullet resistance of the joint, as reinforced, shall be at least equal to that of the panel. Minimum width of reinforcing layer at joint shall be 4−inches (2” on each panel or a 2” minimum overlap).

3.3 APPLICATION

A. Armor shall be installed in accordance with the manufacturer’s printed recommendations. Armor panels shall be adhered using an industrial adhesive, mastic, screws or bolts. Method of application shall maintain the bullet resistive rating at junctures with the concrete floor

slab, the concrete roof slab, the bullet resistive door frames, the bullet resistive window frames, and all required penetrations.

END OF SECTION 134713

SECTION 210517 - SLEEVES AND SLEEVE SEALS FOR FIRE-SUPPRESSION PIPING

PART 1 - GENERAL

1.1 SUMMARY

A. Section Includes:
   1. Sleeves.
   2. Sleeve-seal systems.
   3. Grout.

1.2 ACTION SUBMITTALS

A. Product Data: For each type of product indicated.

PART 2 - PRODUCTS

2.1 SLEEVES

A. Cast-Iron Wall Pipes: Cast or fabricated of cast or ductile iron and equivalent to ductile-iron pressure pipe, with plain ends and integral water stop unless otherwise indicated.

B. Galvanized-Steel Wall Pipes: ASTM A 53/A 53M, Schedule 40, with plain ends and welded steel collar; zinc coated.

C. Galvanized-Steel-Pipe Sleeves: ASTM A 53/A 53M, Type E, Grade B, Schedule 40, zinc coated, with plain ends.

D. PVC-Pipe Sleeves: ASTM D 1785, Schedule 40.

E. Galvanized-Steel-Sheet Sleeves: 0.0239-inch minimum thickness; round tube closed with welded longitudinal joint.

2.2 SLEEVE-SEAL SYSTEMS

A. Manufacturers: Subject to compliance with requirements, provide products by one of the following :

B. Basis-of-Design Product: Subject to compliance with requirements, provide product by one of the following:
   1. Advance Products & Systems, Inc.

C. Description: Modular sealing-element unit, designed for field assembly, for filling annular space between piping and sleeve.
   1. Sealing Elements: NBR interlocking links shaped to fit surface of pipe. Include type and number required for pipe material and size of pipe.
   2. Pressure Plates: Stainless steel.

3. Connecting Bolts and Nuts: Carbon steel, with corrosion-resistant coating, of length required to secure pressure plates to sealing elements.

2.3 GROUT

A. Standard: ASTM C 1107/C 1107M, Grade B, post-hardening and volume-adjusting, dry, hydraulic-cement grout.

B. Characteristics: Non shrink; recommended for interior and exterior applications.

C. Design Mix: 5000-psi (34.5-MPa), 28-day compressive strength.

D. Packaging: Premixed and factory packaged.

PART 3 - EXECUTION

3.1 SLEEVE INSTALLATION

A. Install sleeves for piping passing through penetrations in floors, partitions, roofs, and walls.

B. For sleeves that will have sleeve-seal system installed, select sleeves of size large enough to provide 1-inch annular clear space between piping and concrete slabs and walls.
   1. Sleeves are not required for core-drilled holes.

C. Install sleeves in concrete floors, concrete roof slabs, and concrete walls as new slabs and walls are constructed.
   1. Cut sleeves to length for mounting flush with both surfaces.
      a. Exception: Extend sleeves installed in floors of mechanical equipment areas or other wet areas 2 inches above finished floor level.
   2. Using grout, seal the space outside of sleeves in slabs and walls without sleeve-seal system.

D. Install sleeves for pipes passing through interior partitions.
   1. Cut sleeves to length for mounting flush with both surfaces.
   2. Install sleeves that are large enough to provide 1/4-inch annular clear space between sleeve and pipe or pipe insulation.
   3. Seal annular space between sleeve and piping or piping insulation; use joint sealants appropriate for size, depth, and location of joint.

E. Fire-Barrier Penetrations: Maintain indicated fire rating of walls, partitions, ceilings, and floors at pipe penetrations. Seal pipe penetrations with fire stop materials.

3.2 SLEEVE-SEAL-SYSTEM INSTALLATION

A. Install sleeve-seal systems in sleeves in exterior concrete walls and slabs-on-grade at service piping entries into building.

B. Select type, size, and number of sealing elements required for piping material and size and for sleeve ID or hole size. Position piping in center of sleeve. Center piping in penetration,

assemble sleeve-seal system components, and install in annular space between piping and sleeve. Tighten bolts against pressure plates that cause sealing elements to expand and make a watertight seal.

3.3 SLEEVE AND SLEEVE-SEAL SCHEDULE

A. Use sleeves and sleeve seals for the following piping-penetration applications:
   1. Exterior Concrete Walls above Grade:
      a. Piping Smaller than NPS 6: Cast-iron wall sleeves.
      b. Piping NPS 6 and Larger: Cast-iron wall sleeves.
   2. Exterior Concrete Walls below Grade:
      a. Piping Smaller than NPS 6 Cast-iron wall sleeves with sleeve-seal system.
         1) Select sleeve size to allow for 1-inch (25-mm) annular clear space between piping and sleeve for installing sleeve-seal system.
      b. Piping NPS 6 and Larger: Cast-iron wall sleeves with sleeve-seal systemized-steel-pipe sleeves with sleeve-seal system.
         1) Select sleeve size to allow for 1-inch annular clear space between piping and sleeve for installing sleeve-seal system.
   3. Concrete Slabs-on-Grade:
      a. Piping Smaller Than NPS 6 : Cast-iron wall sleeves with sleeve-seal system
         1) Select sleeve size to allow for 1-inch annular clear space between piping and sleeve for installing sleeve-seal system.
      b. Piping NPS 6 and Larger: Cast-iron wall sleeves with sleeve-seal system.
         1) Select sleeve size to allow for 1-inch annular clear space between piping and sleeve for installing sleeve-seal system.
   4. Concrete Slabs above Grade:
      a. Piping Smaller Than NPS 6: PVC-pipe sleeves.
      b. Piping NPS 6 and Larger: PVC-pipe sleeves.
   5. Interior Partitions:
      a. Piping Smaller Than NPS 6: PVC-pipe sleeves.
      b. Piping NPS 6 and Larger: Galvanized-steel-sheet sleeves.

END OF SECTION 210517

SECTION 210518 - ESCUTCHEONS FOR FIRE-SUPPRESSION PIPING

PART 1 - GENERAL

1.1 SUMMARY

A. Section Includes:
   1. Escutcheons.
   2. Floor plates.

1.2 ACTION SUBMITTALS

A. Product Data: For each type of product indicated.

PART 2 - PRODUCTS

2.1 ESCUTCHEONS

A. Retain one or both finish options in first paragraph below that match escutcheon types retained in Part 3. One-Piece, Cast-Brass Type: With polished, chrome-plated finish and setscrew fastener.

B. One-Piece, Deep-Pattern Type: Deep-drawn, box-shaped brass with chrome-plated finish and spring-clip fasteners.

C. One-Piece, Stamped-Steel Type: With chrome-plated finish and spring-clip fasteners.

2.2 FLOOR PLATES

A. One-Piece Floor Plates: Cast-iron flange with holes for fasteners.

PART 3 - EXECUTION

3.1 INSTALLATION

A. Install escutcheons for piping penetrations of walls, ceilings, and finished floors.

B. Install escutcheons with ID to closely fit around pipe, tube, and insulation of piping and with OD that completely covers opening.
   1. Escutcheons for New Piping:
      a. Piping with Fitting or Sleeve Protruding from Wall: One-piece, deep-pattern type.

b. Chrome-Plated Piping: One-piece, cast-brass type with polished, chrome-plated finish.
c. Insulated Piping: One-piece, stamped-steel type.
d. Bare Piping at Wall and Floor Penetrations in Finished Spaces: One-piece, cast-brass type with polished, chrome-plated finish.
e. Bare Piping at Wall and Floor Penetrations in Finished Spaces: One-piece, stamped-steel type.
f. Bare Piping at Ceiling Penetrations in Finished Spaces: One-piece, cast-brass type with polished, chrome-plated finish.
g. Bare Piping at Ceiling Penetrations in Finished Spaces: One-piece, stamped-steel type.
h. Bare Piping in Unfinished Service Spaces: One-piece, cast-brass type with polished, chrome-plated finish.
i. Bare Piping in Unfinished Service Spaces: One-piece, stamped-steel type.
j. Bare Piping in Equipment Rooms: One-piece, cast-brass type with polished, chrome-plated finish.
k. Bare Piping in Equipment Rooms: One-piece, stamped-steel type.

C. Install floor plates for piping penetrations of equipment-room floors.

D. Install floor plates with ID to closely fit around pipe, tube, and insulation of piping and with OD that completely covers opening.
1. New Piping: One-piece, floor-plate type.

3.2 FIELD QUALITY CONTROL

A. Replace broken and damaged escutcheons and floor plates using new materials.

END OF SECTION 210518

SECTION 210553 - IDENTIFICATION FOR FIRE-SUPPRESSION PIPING AND EQUIPMENT

PART 1 - GENERAL

1.1 SUMMARY

A. Section Includes:
   1. Valve tags.
   2. Warning signs and labels.
   3. Pipe labels.

1.2 ACTION SUBMITTALS

A. Product Data: For each type of product.

B. Equipment-Label Schedule: Include a listing of all equipment to be labeled and the proposed content for each label.

PART 2 - PRODUCTS

2.1 VALVE TAGS

A. Description: Stamped or engraved with 1/4-inch letters for piping-system abbreviation and 1/2-inch numbers.
   1. Tag Material: Brass, 0.032 inch or stainless steel, 0.025 inch thick, with predrilled holes for attachment hardware.
   2. Fasteners: Brass wire-link chain, beaded chain or S-hook.

B. Colors listed in "Valve-Tag Color" and "Letter Color" subparagraphs below comply with color designation according to ASME A13.1. Note also that all colors listed in ASME A13.1 that are preceded by the word "Safety" are required to comply with ANSI Z535.1.
   1. Valve-Tag Color: Safety Red.
   2. Letter Color: White.

C. Valve Schedules: For each piping system, on 8-1/2-by-11-inch bond paper. Tabulate valve number, piping system, system abbreviation (as shown on valve tag), location of valve (room or space), normal-operating position (open, closed, or modulating), and variations for identification. Mark valves for emergency shutoff and similar special uses.
   1. Valve-tag schedule shall be included in operation and maintenance data.

2.2 WARNING SIGNS AND LABELS

A. Material and Thickness: Multilayer, multicolor, plastic labels for mechanical engraving,1/8 inch thick, with predrilled holes for attachment hardware.

B. Letter Color: White.

C. Background Color: Red.

D. Minimum Label Size: Length and width vary for required label content, but not less than 2-1/2 by 3/4 inch.

E. Minimum Letter Size: 1/4 inch for name of units if viewing distance is less than 24 inches, 1/2 inch for viewing distances up to 72 inches, and proportionately larger lettering for greater viewing distances. Include secondary lettering two-thirds to three-fourths the size of principal lettering.

F. Fasteners: Stainless-steel rivets or self-tapping screws.

G. Adhesive: Contact-type permanent adhesive, compatible with label and with substrate.

H. Label Content: Include caution and warning information, plus emergency notification instructions.

2.3 PIPE LABELS

A. General Requirements for Manufactured Pipe Labels: Preprinted, color-coded, with lettering indicating service and showing flow direction.

B. Pretensioned Pipe Labels: Precoiled, semirigid plastic formed to cover full circumference of pipe and to attach to pipe without fasteners or adhesive.

C. Self-Adhesive Pipe Labels: Printed plastic with contact-type, permanent-adhesive backing.

D. Pipe-Label Contents: Include identification of piping service using same designations or abbreviations as used on Drawings; pipe size; and an arrow indicating flow direction.
   1. Flow-Direction Arrows: Integral with piping-system service lettering to accommodate both directions, or as separate unit on each pipe label to indicate flow direction.
   2. Lettering Size: At least 1-1/2 inches high.

PART 3 - EXECUTION

3.1 PREPARATION

A. Clean piping and equipment surfaces of substances that could impair bond of identification devices, including dirt, oil, grease, release agents, and incompatible primers, paints, and encapsulants.

3.2 LABEL INSTALLATION

A. Coordinate installation of identifying devices with completion of covering and painting of surfaces where devices are to be applied.

B. Coordinate installation of identifying devices with locations of access panels and doors.

C. Pipe-Label Locations: Locate pipe labels where piping is exposed or above accessible ceilings in finished spaces; machine rooms; accessible maintenance spaces such as shafts, tunnels, and plenums; and exterior exposed locations as follows:
   1. Near each valve and control device.
   2. Near each branch connection excluding short takeoffs. Where flow pattern is not obvious, mark each pipe at branch.
   3. Near penetrations through walls, floors, ceilings, and inaccessible enclosures.
   4. At access doors, manholes, and similar access points that permit view of concealed piping.
   5. Near major equipment items and other points of origination and termination.
   6. Spaced at maximum intervals of 25 feet along each run. Reduce intervals to 12 feet in areas of congested piping and equipment.
   7. On piping above removable acoustical ceilings. Omit intermediately spaced labels.

END OF SECTION 210553

SECTION 211313 - WET-PIPE SPRINKLER SYSTEMS

PART 1 - GENERAL

1.1 GENERAL AND SPECIAL CONDITIONS:

A. General and special conditions apply to the work in this section

B. The Contractor shall furnish all equipment, materials, tools, labor, engineering, drawings and any other item necessary for a complete fire protection system, with said system being made ready for the operations in accordance with the requirements of the Authority Having Jurisdiction. The purpose of the basis of design and specifications is to convey to the Contractor the scope of work required, all of which the Contractor is responsible to furnish, install, adjust, and make operable. The omission of the Owner of any necessary system component as required by the Authority Having Jurisdiction in the specifications shall not relieve the Contractor of the responsibility for providing such necessity without additional cost to the owner. The Contractor shall visit the site before submitting their bid and shall examine all existing physical conditions that may be material to the performance of their work. No extra payment will be allowed to the Contractor as a result of extra work made necessary by their failure to do so. Any case of error, omission, discrepancy or lack of clarity shall be promptly identified to the Owner, Architect, for clarification prior to the bid due date.

C. The Contractor shall provide all devices and equipment required by these specifications. Under no circumstances will the Contractor delete any equipment or devices without the written directive of the Owner.

D. This Section specifies materials, methods, and equipment to be used for automatic sprinkler system and related fire protection piping to 5 ft outside building.

E. This Section specifies design criteria for fire protection system. The Contractor shall develop layouts for fire protection system, as it relates to architecture, structure and mechanical/electrical systems. The Contractor, based on these layouts, shall produce installation drawings, which are referred to as shop drawings in this Specification.

1.2 SCOPE OF WORK:

A. Provide a new wet-pipe fire protection system to follow the new architectural layout as outlined in the project specifications, including all labor, materials, permit, and shop drawings to furnish and install a complete functional automatic sprinkler system in accordance with NFPA 13, and all the following:
   1. Wet pipe automatic sprinkler system throughout the building.
   2. Any required core drilling of floors and walls, and provide UL listed non-combustible fire stopping materials at all fire protection piping penetrations of fire resistance rated construction. Piping penetrations shall be adequately fire stopped to maintain the fire resistance rating required.

3. Coordinate all work with other trades. During bidding, Contractor shall review their work with other trades to identify any obstructions from beams, ducts, diffusers, lights, structures, etc. Provide cost allowance for piping adjustment, additional piping and sprinklers as required. All changes shall be reflected on shop drawings.
4. Shop drawings.
5. Two (2) sets of operating instructions and valve diagrams.
6. As-built drawings. The Contractor shall provide as-built drawings in Revit and PDF format in addition to required full size reproducible drawings.
7. The Contractor shall provide hydraulic calculation.
8. On-site project supervision.
9. Cabinet containing the required number and type of spare sprinklers and corresponding wrenches, to be in the riser room.
10. All required system testing in accordance with NFPA 13, 24, 25, and 72.
11. Warranty on all materials and labor.
12. All permits, taxes and fees, including AHJ inspection and testing fees necessary to complete the specified work.

1.3 RELATED WORK:

A. Materials and methods specified in other sections, included but not limited to:
   1. Cutting and patching.
   2. Fire extinguishers, cabinets, and accessories.
   3. Painting of finished surfaces at pipe penetrations by other than Contractor.
   4. Grading.

B. Materials furnished and installed in this section but wired by others:
   1. Valve supervisory devices shall be furnished and installed by the Contractor but wired by the alarm contractor.
   2. Water flow switches shall be furnished and installed by the Contractor but wired by the alarm contractor.
   3. Fire sprinkler bell shall be furnished and installed by the Contractor but wired by the alarm contractor.

1.4 ACTION SUBMITTALS

A. Product Data: For each type of product.
   1. Product Data shall include, but is not limited to:
      a. Sprinkler heads
      b. Valves
      c. Piping
      d. Hangers
      e. Specialties and extra materials
   2. Include rated capacities, operating characteristics, electrical characteristics, and furnished specialties and accessories.
   3. Include Manufacturer's specifications and installation instructions. Submit to Architect and AHJ for review and approval.

1.5 INFORMATIONAL SUBMITTALS

A. Coordination Drawings: Sprinkler systems, drawn to scale, on which the following items are shown and coordinated with each other, using input from installers of the items involved:
   1. Domestic water piping.
   2. Compressed air piping.
   3. HVAC hydronic piping.
   4. Items penetrating finished ceiling include the following:
      a. Lighting fixtures.
      b. Air outlets and inlets.

B. Qualification Data: For qualified Installer and professional C-16 fire sprinkler contractor.

C. Design Data:
   1. Approved Sprinkler Piping Drawings: Working plans, prepared according to NFPA 13, that have been approved by authorities having jurisdiction, including hydraulic calculations if applicable.

D. Welding certificates.

E. Field Test Reports:
   1. Indicate and interpret test results for compliance with performance requirements and as described in NFPA 13. Include "Contractor's Material and Test Certificate for Aboveground Piping."
   2. Fire-hydrant flow test report.

F. Field quality-control reports.

1.6 CLOSEOUT SUBMITTALS

A. Operation and Maintenance Data: For wet-pipe sprinkler systems and specialties to include in emergency, operation, and maintenance manuals.

1.7 QUALITY ASSURANCE

A. Installer Qualifications:
   1. Installer's responsibilities include designing, fabricating, and installing sprinkler systems and providing professional engineering services needed to assume engineering responsibility. Installer shall base calculations on results of fire-hydrant flow test.
      a. Engineering Responsibility: Preparation of working plans, calculations, and field test reports by a qualified professional engineer.

B. Welding Qualifications: Qualify procedures and operators according to 2010 ASME Boiler and Pressure Vessel Code.

1.8 FIELD CONDITIONS

A. Interruption of Existing Sprinkler Service: Do not interrupt sprinkler service to facilities occupied by Owner or others unless permitted under the following conditions and then only after arranging to provide temporary sprinkler service according to requirements indicated:
   1. Notify Architect, Construction Manager, and Owner no fewer than two days in advance of proposed interruption of sprinkler service.
   2. Do not proceed with interruption of sprinkler service without Architect's, Construction Manager's and Owner's written permission.

PART 2 - PRODUCTS

2.1 PERFORMANCE REQUIREMENTS

A. Sprinkler system equipment, specialties, accessories, installation, and testing shall comply with the following:
   1. NFPA 13.

B. Standard-Pressure Piping System Component: Listed for 175-psig minimum working pressure.

C. Design-Build Entity: Engage a qualified licensed C-16 fire sprinkler contractor to design wet-pipe sprinkler systems.
   1. Perform or request the performance of a fire-hydrant flow test. Flow test shall clearly indicate the following conditions:

      a. Date.
      b. Time.
      c. Performed by.
      d. Location of Residual Fire Hydrant R.
      e. Location of Flow Fire Hydrant F.
      f. Static Pressure at Residual Fire Hydrant R.
      g. Measured Flow at Flow Fire Hydrant F.
      h. Residual Pressure at Residual Fire Hydrant R.
   2. Sprinkler system design shall be approved by authorities having jurisdiction.

      a. Margin of Safety for Available Water Flow and Pressure: 10 percent, including losses through water-service piping, valves, and backflow preventers.
      b. Sprinkler Occupancy Hazard Classifications:
         1) Building Service Areas: Ordinary Hazard, Group 1.
         2) Electrical Equipment Rooms: Ordinary Hazard, Group 1.
         3) General Storage Areas: Ordinary Hazard, Group 1.
         4) Mechanical Equipment Rooms: Ordinary Hazard, Group 1.
         5) Office and Public Areas: Light Hazard.
         6) Restrooms & Lockers: Light Hazard.
   3. Minimum Density for Automatic-Sprinkler Piping Design:
      a. Light-Hazard Occupancy: 0.10 gpm over 1500-sq. ft. area.
      b. Ordinary-Hazard, Group 1 Occupancy: 0.15 gpm over 1500-sq. ft. area.
      c. Ordinary-Hazard, Group 2 Occupancy: 0.20 gpm over 1500-sq. ft. area.

d. Special Occupancy Hazard: As determined by authorities having jurisdiction.

4. Maximum Protection Area per Sprinkler: According to UL listing.
5. Maximum Protection Area per Sprinkler:
   a. Office Spaces: 225 sq. ft..
   b. Storage Areas: 130 sq. ft..
   c. Mechanical Equipment Rooms: 130 sq. ft..
   d. Electrical Equipment Rooms: 130 sq. ft..
   e. Other Areas: According to NFPA 13 recommendations unless otherwise indicated.

D. Seismic Performance: Sprinkler piping shall withstand the effects of earthquake motions determined according to NFPA 13 and ASCE/SEI 7.

2.2 STEEL PIPE AND FITTINGS

A. Shall be designed per NFPA 13 Section 16.3.

2.3 SPRINKLERS

A. Shall be selected and designed per NFPA 13 Chapter 10.

2.4 ALARM DEVICES

A. Alarm-device types shall match piping and equipment connections.

B. Electrically Operated Alarm Bell:
   1. Standard: UL 464.
   2. Type: Vibrating, metal alarm bell.
   3. Size: 10-inch diameter.
   4. Finish: Red-enamel factory finish, suitable for outdoor use.
   5. Electrical Components, Devices, and Accessories: Listed and labeled as defined in NFPA 70, by a qualified testing agency, and marked for intended location and application.

C. Water-Flow Indicators:
   1. Standard: UL 346.
   2. Water-Flow Detector: Electrically supervised.
   3. Components: Two single-pole, double-throw circuit switches for isolated alarm and auxiliary contacts, 7 A, 125-V ac and 0.25 A, 24-V dc; complete with factory-set, field-adjustable retard element to prevent false signals and tamperproof cover that sends signal if removed.
   4. Type: Paddle operated.
   5. Pressure Rating: 250 psig.
   6. Design Installation: Horizontal or vertical.

D. Pressure Switches:
   1. Standard: UL 346.
   2. Type: Electrically supervised water-flow switch with retard feature.

3. Components: Single-pole, double-throw switch with normally closed contacts.
4. Design Operation: Rising pressure signals water flow.

E. Valve Supervisory Switches:
1. Standard: UL 346.
2. Type: Electrically supervised.
3. Components: Single-pole, double-throw switch with normally closed contacts.
4. Design: Signals that controlled valve is in other than fully open position.
5. Electrical Components, Devices, and Accessories: Listed and labeled as defined in NFPA 70, by a qualified testing agency, and marked for intended location and application.

2.5 PRESSURE GAGES

A. Standard: UL 393.

B. Dial Size: 3-1/2- to 4-1/2-inch diameter.

C. Pressure Gage Range: 0- to 250-psig minimum.

D. Label: Include "WATER" label on dial face.

PART 3 - EXECUTION

3.1 PREPARATION

A. Perform fire-hydrant flow test according to NFPA 13 and NFPA 291. Use results for system design calculations required in "Quality Assurance" Article.

B. Report test results promptly and in writing.

3.2 SERVICE-ENTRANCE PIPING

A. Connect sprinkler piping to water-service piping for service entrance to building. Install shutoff valve, backflow preventer, pressure gage, drain, and other accessories indicated at connection to water-service piping. Install shutoff valve, check valve, pressure gage, and drain at connection to water service.

3.3 PIPING INSTALLATION

A. Locations and Arrangements:
1. Coordinate layout and installation of sprinklers with other construction that penetrates ceilings, including light fixtures, HVAC equipment, and partition assemblies.

B. Piping Standard: Comply with NFPA 13 requirements for installation of sprinkler piping and installation of seismic restraints on piping.

C. Fill sprinkler system piping with water.

D. Install sleeves for piping penetrations of walls, ceilings, and floors, including but not limited to concrete walls and slabs. Comply with requirements for sleeves specified in Section 210517 "Sleeves and Sleeve Seals for Fire-Suppression Piping."

E. Install escutcheons for piping penetrations of walls, ceilings, and floors. Comply with requirements for escutcheons specified in Section 210518 "Escutcheons for Fire-Suppression Piping."

F. Provide drip pans beneath all fire sprinkler piping located above Server Rooms, IDF Rooms, and similar spaces containing critical electronic or communications equipment.

3.4 VALVE INSTALLATION

A. Install listed fire-protection valves, trim and drain valves according to NFPA 13 and authorities having jurisdiction.

B. Install listed fire-protection shutoff valves supervised open, located to control sources of water supply except from fire-department connections. Install permanent identification signs indicating portion of system controlled by each valve.

C. Install check valve in each water-supply connection. Install backflow preventers instead of check valves in potable-water-supply sources.

3.5 SPRINKLER INSTALLATION

A. Install sprinklers in suspended ceilings in center of acoustical ceiling panels.

B. Install sprinklers into flexible, sprinkler hose fittings, and install hose into bracket on ceiling grid.

3.6 IDENTIFICATION

A. Install labeling and pipe markers on equipment and piping according to requirements in NFPA 13.

3.7 FIELD QUALITY CONTROL

A. Perform the following tests and inspections with the assistance of a factory-authorized service representative:
   1. Leak Test: After installation, charge systems and test for leaks. Repair leaks and retest until no leaks exist.
   2. Test and adjust controls and safeties. Replace damaged and malfunctioning controls and equipment.
   3. Flush, test, and inspect sprinkler systems according to NFPA 13, "Systems Acceptance" Chapter.

4. Coordinate with fire-alarm tests. Operate as required.
5. Verify that equipment hose threads are same as local fire department equipment.

B. Sprinkler piping system will be considered defective if it does not pass tests and inspections.

C. Prepare test and inspection reports.

3.8 CLEANING

A. Clean dirt and debris from sprinklers.

B. Only sprinklers with their original factory finish are acceptable. Remove and replace any sprinklers that are painted or have any other finish than their original factory finish.

3.9 PIPING SCHEDULE

A. Piping between Fire Department Connections and Check Valves: Galvanized, standard-weight steel pipe with grooved ends, grooved-end fittings, grooved-end-pipe couplings, and grooved joints.

B. Sprinkler specialty fittings may be used, downstream of control valves, instead of specified fittings.

C. Standard-pressure, wet-pipe sprinkler system, NPS 2 and smaller, shall be one of the following:
1. Schedule 40 black-steel pipe with threaded ends; uncoated, gray-iron threaded fittings; and threaded joints.
2. Schedule 40 galvanized-steel pipe with threaded ends; galvanized, gray-iron threaded fittings; and threaded joints.
3. Schedule 40 galvanized-steel pipe with cut-grooved ends; galvanized, grooved-end fittings for steel piping; grooved-end-pipe couplings for steel piping; and grooved joints.
4. Schedule 40 black-steel pipe with plain ends; steel welding fittings; and welded joints.

D. Standard-pressure, wet-pipe sprinkler system, NPS 2-1/2 and larger, shall be one of the following:
1. Schedule 10 black-steel pipe with roll-grooved ends; uncoated, grooved-end fittings for steel piping; grooved-end-pipe couplings for steel piping; and grooved joints.
2. Schedule 10 black-steel pipe with plain ends; welding fittings; and welded joints.

3.10 SPRINKLER SCHEDULE

A. Use sprinkler types in subparagraphs below for the following applications:
1. Rooms without Ceilings: Upright sprinklers.
2. Rooms with Suspended Ceilings: Concealed sprinklers.
3. Wall Mounting: Sidewall sprinklers.
4. Spaces Subject to Freezing: Pendent, dry sprinklers.

B. Provide sprinkler types in subparagraphs below with finishes indicated.

1. Concealed Sprinklers: Rough brass, with factory-painted white cover plate.
2. Flush Sprinklers: Bright chrome, with painted white escutcheon.
3. Recessed Sprinklers: Bright chrome, with bright chrome escutcheon.
4. Upright, Pendent, and Sidewall Sprinklers: Chrome plated in finished spaces exposed to view; rough bronze in unfinished spaces not exposed to view; wax coated where exposed to acids, chemicals, or other corrosive fumes.

END OF SECTION 211313

SECTION 220000 - GENERAL PLUMBING REQUIREMENTS

PART 1 - GENERAL

1.1 RELATED DOCUMENTS

A. Drawings and general provisions of the Contract, including General and Supplementary Conditions and Division 01 Specification Sections, apply to this Section.

1.2 SCOPE

A. Basic plumbing requirements specifically applicable to Division 22 Sections.

B. Work includes but is not necessarily limited to the following:

1. Labor, materials, services, equipment, and appliances required for completion of tasks as indicated on drawing or in specification or as inherently necessary to prepare spaces and systems for new installations as follows:

   a. Plumbing systems and equipment

1.3 DRAWINGS AND SPECIFICATIONS

A. Drawings accompanying these Specifications show intent of Work to be done. Specifications shall identify quality and grade of installation and where equipment and hardware is not particularly specified, Contractor shall provide submittals for all products and install them per manufacturers' recommendations, and in a first class manner.

B. Examine Drawings and Specifications for elements in connection with this Work; determine existing and new general construction conditions and be familiar with all limitations caused by such conditions.

C. Plans are intended to show general arrangement and extent of Work contemplated. Exact location and arrangement of parts shall be determined after the Owner has reviewed equipment, as Work progresses, to conform in best possible manner with surroundings, and as directed by the Owner's Representative.

D. Contract Documents are in part diagrammatic and intended to show the scope and general arrangement of the Work under this Contract. The Contractor shall follow these drawings in laying out the equipment, piping and ductwork. Drawings are not intended to be scaled for roughing in measurements or to serve as shop drawings. Where job conditions require minor changes or adjustments in the indicated locations or arrangement of the Work, such changes shall be made without change in the Contract amount.

E. Follow dimensions without regard to scale. Where no figures or notations are given, the Plans shall be followed.

1.4 UTILITIES

A. Location and sizes of electrical, mechanical and plumbing service facilities are shown in accordance with data secured from existing record drawings and site observations. Data shown are offered as an estimating guide without guarantee of accuracy. Check and verify all data given, and verify exact location of all utility services pertaining to Work prior to excavation or performing Work.

1.5 APPLICABLE REFERENCE STANDARDS, CODES AND REGULATIONS:

A. Meet requirements of all state codes having jurisdiction.

B. State of California Code of Regulations:

1. Title 8, Industrial Relations
2. Title 19, State Fire Marshal Regulations
3. Current California Building Code (CBC), Title 24, Part 2
4. Current California Electrical Code, Title 24, Part 3
5. Current California Mechanical Code, Title 24, Part 4
6. Current California Plumbing Code, Title 24, Part 5
7. Current California Fire Code, Title 24, Part 9
8. Current California Standards Code, Title 24, Part 12
9. Title 24, Energy Conservation Standards
10. California Green Building Standard Code, Title 24, Part 11

C. Additional Referenced Standards:

1. ASME American Society of Mechanical Engineers
2. ASTM American Society for Testing and Materials
3. NEMA National Electrical Manufacturer's Association
4. NFPA National Fire Protection Association Standards
5. PDIPlumbing and Drainage Institute
6. UL Underwriters Laboratories

D. Codes and ordinances having jurisdiction over Work are minimum requirements; but, if Contract Documents indicate requirements, which are in excess of those minimum requirements, then requirements of the Contract Documents shall be followed. Should there be any conflicts between Contract Documents or codes or any ordinances having jurisdiction, report these to the Owner's Representative.

E. Obtain permits, and request inspections from authority having jurisdiction.

1.6 PROJECT AND SITE CONDITIONS

A. The arrangement of and connection to equipment shown on the drawings is based upon information available and is not intended to show exact dimensions peculiar to a specific manufacturer. The Drawings are, in part, diagrammatic and some features of the illustrated equipment installations may require revision to meet actual equipment installation requirements.

Structural supports, housekeeping pads, piping connections and adjacent equipment may have to be altered to accommodate the equipment provided. No additional payment will be made for such revisions or alterations.

B. Examine all Drawings and Specifications to be fully cognizant of all work required under this Division.

C. Examine site related work and surfaces before starting work of any Section.

D. Install Work in locations shown on approved Drawings, unless prevented by Project conditions.

E. Prepare shop drawings showing proposed rearrangement of Work to meet Project conditions, including changes to Work specified in other Sections. Obtain permission from the Owner's Representative before proceeding.

F. Plumbing Contractor shall be fully responsible to survey all underground utilities prior to installation of any utilities.

G. Beginning work of any Section constitutes acceptance of conditions.

H. All connections to site piping shall be done by the plumbing contractor.

I. All work shall be performed in a clean and workmanlike manner. Care shall be exercised to minimize any inconvenience or disturbance to other areas of the building which are to remain in operation. Isolate work areas by means to keep dust and dirt within the construction area.

J. All piping into stem walls and footings shall be double half lap wrapped with 1/8" thick "Armaflex" insulation. The contractor shall also provide blocked out areas in stem wall and footing. All piping shall avoid the lower 8" of the footing.

K. All existing piping damaged during construction shall be repaired with materials to match existing by the contractor.

1.7 COOPERATION WITH WORK UNDER OTHER DIVISIONS

A. Cooperate with other trades to facilitate general progress of Work. Allow all other trades every reasonable opportunity for installation of their work.

B. Work under this Division shall follow general building construction closely. Set pipe sleeves and inserts and verify that openings for chases and pipes are provided.

C. Work with other trades in determining exact location of outlets, pipes, and pieces of equipment to avoid interference with lines required to maintain proper installation of Work.

D. Make such progress in the Work to not delay work of other trades.

E. Coordinate with electrical contractor prior to ordering equipment for available voltages at all equipment locations.

F. Mechanical Work shall have precedence over the other in the following sequence:

1. Soil and waste piping
2. Hydronic piping
3. Ductwork
4. Fire sprinkler piping
5. Domestic water piping

1.8 DISCREPANCIES

A. The Contractor shall check all Drawings furnished him immediately upon their receipt and shall promptly notify the Owner's Representative of any discrepancies. Figures marked on Drawings shall in general be followed in preference to scale measurements. Piping and instrumentation diagrams shall in general govern floor plans and sections. Large-scale drawings shall in general govern small-scale drawings.

B. Where requirements between Drawings and Specifications conflict, the more restrictive provisions shall apply.

C. If any part of the Specifications or Drawings appears unclear or contradictory, apply to Owner's Representative for interpretation and decision as early as possible, including during bidding period. Do not proceed with such work without Owner Representatives decision. Beginning work of any Section constitutes acceptance of conditions.

1.9 CHANGES

A. The Contractor shall be responsible to make and obtain approval from the Owner's Representative for all necessary adjustments in piping and equipment layouts as required to accommodate the relocations of equipment and/or devices, which are affected by any approved authorized changes or Product substitutions. All changes shall be clearly indicated on the "Record" drawings.

1.10 SUBMITTALS

A. Refer to Division 01 for additional requirements.

B. The manufacturer, contractor or supplier shall include a written statement that the submitted equipment, hardware or accessory complies with the requirement of that particular specification section.

C. The manufacturer shall resubmit the specification section showing compliance with each respective paragraphs and specified items and features in that particular specification section.

D. All **exceptions** shall be clearly identified by referencing respective paragraph and other requirements along with proposed alternative.

E. Note that prior to acceptance of submittals for review, a submittal schedule shall be submitted to

the owner's representative.

F. Submit all division 22 shop drawings and product data grouped and referenced by the specification technical section numbers in one complete submittal package. Individual or partial submittals are not acceptable and will be returned without review.

G. Shop Drawings:

1. Provide all shop drawings in latest version of Revit/AutoCAD format and PDF format.
2. Drawings shall be a 30 inches by 42 inches in size with a minimum scale of 1/4-inch per foot, except as specified otherwise.
3. Include installation details of equipment indicating proposed location, layout and arrangement, accessories, piping, and other items that must be shown to assure a coordinated installation.
4. Indicate adequate clearance for operation, maintenance, and replacement of operating equipment devices.
5. If equipment is disapproved, revise drawings to show acceptable equipment and resubmit.
6. The Contractor shall be responsible for all equipment ordered and/or installed prior to receipt of shop drawings returned from the Owner's Representative bearing the Owner's Representative stamp of "Reviewed". All corrections or modifications to the equipment as noted on the shop drawings shall be performed and equipment removed from the job site at the request of the Owner's Representative without additional compensation.

H. Whenever more than one manufacturer's product is specified, the first named product is the basis of design used in the Work and the use of alternate-named manufacturer's products or substitutes may require modifications in that design.

I. Proposed Products List: Include Products as required by the individual section in this Division.

J. The Contractor shall be responsible for all equipment ordered and/or installed prior to receipt of shop drawings returned from the Owner's Representative bearing the Owner's Representative stamp of "Reviewed". All corrections or modifications to the equipment as noted on the shop drawings shall be performed and equipment removed from the job site at the request of the Owner's Representative without additional compensation.

K. Manufacturer's Data: For each manufactured item, provide current manufacturer's descriptive literature of cataloged products, certified equipment drawings, diagrams, performance and characteristic curves if applicable, and catalog cuts.

L. Standard Compliance: When materials or equipment provided by the Contractor must conform to the standards of organizations such as American National Standards Institute (ANSI) or American Water Works Association (AWWA), submit proof of such conformance to the Owner Representative for approval. If an organization uses a label or listing to indicate compliance with a particular standard, the label or listing will be acceptable evidence, unless otherwise specified. In lieu of the label or listing, submit a certificate from an independent testing organization, which is competent to perform acceptance testing and is approved by the Owner Representative. The certificate shall state that the item has been tested in accordance with the specified organization's test methods and that the item conforms to the specified organization's standard.

M. Certified Test Reports: Before delivery of materials and equipment, certified copies of all test

reports specified in individual sections shall be submitted for approval.

N. Certificates of Compliance or Conformance: Submit manufacturer's certifications as required on products, materials, finish, and equipment indicated in the technical sections. Certifications shall be documents prepared specifically for this Contract. Pre-printed certifications and copies of previously submitted documents will not be acceptable. The manufacturer's certifications shall name the appropriate products, equipment, or materials and the publication specified as controlling the quality of that item. Certification shall not contain statements to imply that the item does not meet requirements specified, such as "as good as"; or "achieve the same end use and results as materials formulated in accordance with the referenced publications"; or "equal or exceed the service and performance of the specified material." Certifications shall simply state that the item conforms to the requirements specified. Certificates shall be printed on the manufacturer's letterhead and shall be signed by the manufacturer's official authorized to sign certificates of compliance or conformance.

1.11 PROJECT RECORD DOCUMENTS

A. Refer to Division 01 for additional requirements.

1. All changes, deviations and information recorded on the “Project Record Drawings” set during Construction shall be redrafted onto the latest version of AutoCAD or Revit, where applicable.
2. Submit completed shop drawings to the Owner prior to completion in AutoCAD format. Contractor hand marked or drafted redlined “Project Record Drawings” will not be accepted.

1.12 PRODUCT ALTERNATIVES OR SUBSTITUTIONS

A. Refer to General Conditions and Division 01 for additional requirements.

1.13 OPERATING INSTRUCTIONS

A. Furnish approved operating instructions for systems and equipment indicated in the technical sections for use by operation and maintenance personnel.

1.14 MANUFACTURER'S RECOMMENDATIONS

A. Where installation procedures or any part thereof are required to be in accordance with manufacturer's recommendations, furnish printed copies of the recommendations prior to installation. Installation of the item shall not proceed until recommendations are received. Failure to furnish recommendations shall be cause for rejection of the equipment or material.

1.15 DELIVERY AND STORAGE

A. Refer to Division 01 for additional requirements.

B. Handle, store, and protect equipment and materials in accordance with the manufacturer's recommendations and with the requirements of NFPA 70B P, Appendix I, titled "Equipment Storage and Maintenance During Construction." Replace damaged or defective items with new items.

1.16 GUARANTEE

A. Except as may be specified under other sections in the Specifications, guarantee all equipment furnished under the Specifications for a period of one year from date of project acceptance against defective workmanship and material and improper installation. Upon notification of failure, correct deficiency immediately and without cost to the Owner.

B. Standard warranty of manufacturer shall apply for replacement of parts after expiration of the above period. Manufacturer shall furnish replacement parts to the Owner for their service agency as directed.

1.

PART 2 - PRODUCTS

Not Applicable.

PART 3 - EXECUTION

3.1 GENERAL

A. Obtain and pay for all permits and inspections, including any independent testing required to verify standard compliance, and deliver certificates for same to the Owner's Representative.

3.2 WORK RESPONSIBILITIES

A. The drawings indicate diagrammatically the desired locations or arrangement of piping, equipment, etc., and are to be followed as closely as possible. Proper judgment must be exercised in executing the work to secure the best possible installation in the available space and to overcome local difficulties due to space limitations or interference with structural conditions.

B. The Contractor is responsible for the correct placing of Work and the proper location and connection of Work in relation to the work of other trades. Advise appropriate trade as to locations of access panels.

C. In the event changes in the indicated locations or arrangements are necessary, due to developed conditions in the building construction or rearrangement of furnishings or equipment, such changes shall be made without extra cost, providing the change is ordered before the ductwork, piping, etc. and work directly connected to same is installed and no extra materials are required.

D. Where equipment is furnished by others, verify dimensions and the correct locations of this

equipment before proceeding with the roughing-in of connections.

E. All scaled and figured dimensions are approximate of typical equipment of the class indicated. Before proceeding with any work, carefully check and verify all dimensions, sizes, etc. with the drawings to see that the equipment will fit into the spaces provided without violation of applicable codes.

F. Should any changes to the Work indicated on the Drawings or described in the Specifications be necessary in order to comply with the above requirements, notify the Owner immediately and cease work on all parts of the contract, which are affected until approval for any required modifications to the construction has been obtained from the Owner.

G. Be responsible for any cooperative work, which must be altered due to lack of proper supervision or failure to make proper provisions in time. Such changes shall be under direction of the Owner and shall be made to his satisfaction. Perform all Work with competent and skilled personnel.

H. All work, including aesthetic as well as mechanical aspects of the Work, shall be of the highest quality consistent with the best practices of the trade.

I. Replace or repair, without additional compensation, any work, which, in the opinion of the Owner, does not comply with these requirements.

3.3 PAINTING

A. Refer to Division 09 Painting for additional requirements.

B. Factory Applied:

1. Plumbing equipment shall have factory-applied painting systems which shall, as a minimum, meet the requirements of NEMA ICS 6 corrosion-resistance test, except equipment specified to meet requirements of ANSI C37.20 shall have a finish as specified in ANSI C37.20.

2. Refer to individual sections of this Division for more stringent requirements.

C. Field Applied:

1. Paint all plumbing equipment as required to touch up, to match finish on other equipment in adjacent spaces or to meet safety criteria.

2. Paint all exposed plumbing piping, valves, supports, hangers and appurtenances. Provide minimum 5 mils dry film thickness.
3. Paint shall be a high performance polyurethane enamel coating system.
4. Acceptable primer manufacturers include:

   a. Ameron Amershield VOC, Tnemec's Series 1075 (1074) Endura-Shield, semi-gloss (gloss) sheen or equal.

5. Acceptable paint manufacturers include:

a. Ameron, Tnemec or engineer approved equal.

END OF SECTION 220000

SECTION 220500 - COMMON WORK RESULTS FOR PLUMBING

PART 1 - GENERAL

1.1 SUMMARY

A. This Section includes the following:

1. Piping materials and installation instructions common to most piping systems.
2. Dielectric fittings.
3. Transition fittings.
4. Mechanical sleeve seals.
5. Sleeves.
6. Escutcheons.
7. Grout.
8. Plumbing demolition.
9. Equipment installation requirements common to equipment sections.
10. Concrete bases.
11. Supports and anchorages.

1.2 DEFINITIONS

A. Finished Spaces: Spaces other than plumbing and electrical equipment rooms, furred spaces, pipe chases, unheated spaces immediately below roof, spaces above ceilings, unexcavated spaces, crawlspaces, and tunnels.

B. Exposed, Interior Installations: Exposed to view indoors. Examples include finished occupied spaces and plumbing equipment rooms.

C. Exposed, Exterior Installations: Exposed to view outdoors or subject to outdoor ambient temperatures and weather conditions. Examples include rooftop locations.

D. Concealed, Interior Installations: Concealed from view and protected from physical contact by building occupants. Examples include above ceilings and in chases.

E. Concealed, Exterior Installations: Concealed from view and protected from weather conditions and physical contact by building occupants but subject to outdoor ambient temperatures. Examples include installations within unheated shelters.

F. The following are industry abbreviations for plastic materials:

1. ABS: Acrylonitrile-butadiene-styrene plastic.
2. CPVC: Chlorinated polyvinyl chloride plastic.
3. PE: Polyethylene plastic.
4. PVC: Polyvinyl chloride plastic.

1.3 SUBMITTALS

A. Submittals shall be formatted per Section 220000 “General Plumbing Requirements”. The manufacturer shall resubmit the specification section showing compliance with each respective paragraphs and specified items and features in that particular specification section. All **exceptions** shall be clearly identified by referencing respective paragraph and other requirements. Next to each specification item, indicate the following:

1. “No Exception Taken”.
2. “Exception”. All exceptions shall be clearly identified by referencing respective paragraph and other requirements along with proposed alternative.

B. Product Data: For the following:

1. Transition fittings.
2. Dielectric fittings.
3. Mechanical sleeve seals.
4. Escutcheons.

C. Welding certificates.

1. Welding certificates.
2. Product Information for approval before purchase
3. Operation and Maintenance Manuals

1.4 QUALITY ASSURANCE

A. Steel Support Welding: Qualify processes and operators according to AWS D1.1, "Structural Welding Code--Steel."

B. Steel Pipe Welding: Qualify processes and operators according to ASME Boiler and Pressure Vessel Code: Section IX, "Welding and Brazing Qualifications."

1. Comply with provisions in ASME B31 Series, "Code for Pressure Piping."
2. Certify that each welder has passed AWS qualification tests for welding processes involved and that certification is current.

C. Electrical Characteristics for Plumbing Equipment: Equipment of higher electrical characteristics may be furnished provided such proposed equipment is approved in writing and connecting electrical services, circuit breakers, and conduit sizes are appropriately modified. If minimum energy ratings or efficiencies are specified, equipment shall comply with requirements.

1.5 DELIVERY, STORAGE, AND HANDLING

A. Deliver pipes and tubes with factory-applied end caps. Maintain end caps through shipping, storage, and handling to prevent pipe end damage and to prevent entrance of dirt, debris, and moisture.

B. Store plastic pipes protected from direct sunlight. Support to prevent sagging and bending.

1.6 COORDINATION

A. Arrange for pipe spaces, chases, slots, and openings in building structure during progress of construction, to allow for plumbing installations.

B. Coordinate installation of required supporting devices and set sleeves in poured-in-place concrete and other structural components as they are constructed.

C. Coordinate requirements for access panels and doors for plumbing items requiring access that are concealed behind finished surfaces. Access panels and doors are specified in Division 08 Section "Access Doors and Frames."

PART 2 - PRODUCTS

2.1 PIPE, TUBE, AND FITTINGS

A. Refer to individual Division 22 piping Sections for pipe, tube, and fitting materials and joining methods.

B. Pipe Threads: ASME B1.20.1 for factory-threaded pipe and pipe fittings.

C. All plumbing pipe, tube and fittings shall be manufactured exclusively in the United States.

2.2 JOINING MATERIALS

A. Refer to individual Division 22 piping Sections for special joining materials not listed below.

B. Pipe-Flange Gasket Materials: ASME B16.21, nonmetallic, flat, asbestos-free, 1/8-inch maximum thickness unless thickness or specific material is indicated.

C. Plastic, Pipe-Flange Gasket, Bolts, and Nuts: Type and material recommended by piping system manufacturer, unless otherwise indicated.

D. Solder Filler Metals: ASTM B 32, lead-free alloys. Include water-flushable flux according to ASTM B 813.

E. Brazing Filler Metals:

1. Conform to AWS A5.8.
2. Construct joints according to AWS's "Brazing Handbook," Chapter "Pipe and Tube."
3. Use 15% silver brazing filler metal without flux.

F. Welding Filler Metals: Comply with AWS D10.12. for welding materials appropriate for wall thickness and chemical analysis of steel pipe being welded.

G. Solvent Cements for Joining Plastic Piping:

1. ABS Piping: ASTM D 2235.
2. CPVC Piping: ASTM F 493.
3. PVC Piping: ASTM D 2564. Include primer according to ASTM F 656.
4. PVC to ABS Piping Transition: ASTM D 3138.

2.3 DIELECTRIC FITTINGS

A. Description: Combination fitting of copper alloy and ferrous materials with threaded, solder-joint, plain, or weld-neck end connections that match piping system materials.

B. Insulating Material: Suitable for system fluid, pressure, and temperature.

C. Dielectric Unions: Factory-fabricated, union assembly, for 250-psig minimum working pressure at 180 deg F.

D. Dielectric Flanges: Factory-fabricated, companion-flange assembly, for 150- or 300-psig minimum working pressure as required to suit system pressures.

E. Dielectric Couplings: Galvanized-steel coupling with inert and noncorrosive, thermoplastic lining; threaded ends; and 300-psig minimum working pressure at 225 deg F.

F. Dielectric Nipples: Electroplated steel nipple with inert and noncorrosive, thermoplastic lining; plain, threaded, or grooved ends; and 300-psig minimum working pressure at 225 deg F.

2.4 MECHANICAL SLEEVE SEALS

A. Description: Modular sealing element unit, designed for field assembly, to fill annular space between pipe and sleeve.

1. Manufacturers:

   a. Advance Products & Systems, Inc.
   b. Calpico, Inc.
   c. Metraflex Co.

2. Sealing Elements: EPDM interlocking links shaped to fit surface of pipe. Include type and number required for pipe material and size of pipe.
3. Pressure Plates: Stainless steel. Include two for each sealing element.
4. Connecting Bolts and Nuts: Stainless steel of length required to secure pressure plates to sealing elements. Include one for each sealing element.

2.5 SLEEVES

A. Galvanized-Steel Sheet: 0.0239-inch minimum thickness; round tube closed with welded longitudinal joint.

B. Steel Pipe: ASTM A 53, Type E, Grade B, Schedule 40, galvanized, plain ends.

C. Cast Iron: Cast or fabricated "wall pipe" equivalent to ductile-iron pressure pipe, with plain ends and integral waterstop, unless otherwise indicated.

D. Stack Sleeve Fittings: Manufactured, cast-iron sleeve with integral clamping flange. Include clamping ring and bolts and nuts for membrane flashing.

1. Underdeck Clamp: Clamping ring with set screws.

E. Molded PVC: Permanent, with nailing flange for attaching to wooden forms.

F. PVC Pipe: ASTM D 1785, Schedule 40.

G. Molded PE: Reusable, PE, tapered-cup shaped, and smooth-outer surface with nailing flange for attaching to wooden forms.

2.6 ESCUTCHEONS

A. Description: Manufactured wall and ceiling escutcheons and floor plates, with an ID to closely fit around pipe, tube, and insulation of insulated piping and an OD that completely covers opening.

B. One-Piece, Deep-Pattern Type: Deep-drawn, box-shaped brass with polished chrome-plated finish.

C. One-Piece, Cast-Brass Type: With set screw.

1. Finish: Polished chrome-plated.

D. Split-Casting, Cast-Brass Type: With concealed hinge and set screw.

1. Finish: Polished chrome-plated.

2.7 GROUT

A. Description: ASTM C 1107, Grade B, nonshrink and nonmetallic, dry hydraulic-cement grout.

1. Characteristics: Post-hardening, volume-adjusting, nonstaining, noncorrosive, nongaseous, and recommended for interior and exterior applications.
2. Design Mix: 5000-psi, 28-day compressive strength.
3. Packaging: Premixed and factory packaged.

PART 3 - EXECUTION

3.1 PLUMBING DEMOLITION

A. Refer to Division 01 Section "Cutting and Patching" and Division 02 Section "Selective Structure Demolition" for general demolition requirements and procedures.

B. Disconnect, demolish, and remove plumbing systems, equipment, and components indicated to be removed.

1. Piping to Be Removed: Remove portion of piping indicated to be removed and cap or plug remaining piping with same or compatible piping material.
2. Equipment to Be Removed: Disconnect and cap services and remove equipment.
3. Equipment to Be Removed and Reinstalled: Disconnect and cap services and remove, clean, and store equipment; when appropriate, reinstall, reconnect, and make equipment operational.
4. Equipment to Be Removed and Salvaged: Disconnect and cap services and remove equipment and deliver to Owner.

C. If pipe, insulation, or equipment to remain is damaged in appearance or is unserviceable, remove damaged or unserviceable portions and replace with new products of equal capacity and quality.

3.2 PIPING SYSTEMS - COMMON REQUIREMENTS

A. Install piping according to the following requirements and Division 22 Sections specifying piping systems.

B. Drawing plans, schematics, and diagrams indicate general location and arrangement of piping systems. Indicated locations and arrangements were used to size pipe and calculate friction loss, expansion, pump sizing, and other design considerations. Install piping as indicated unless deviations to layout are approved on Coordination Drawings.

C. Install piping in concealed locations, unless otherwise indicated and except in equipment rooms and service areas.

D. Install piping indicated to be exposed and piping in equipment rooms and service areas at right angles or parallel to building walls. Diagonal runs are prohibited unless specifically indicated otherwise.

E. Install piping above accessible ceilings to allow sufficient space for ceiling panel removal.

F. Install piping to permit valve servicing.

G. Install piping at indicated slopes.

H. Install piping free of sags and bends.

I. Install fittings for changes in direction and branch connections.

J. Install piping to allow application of insulation.

K. Select system components with pressure rating equal to or greater than system operating pressure.

L. Install escutcheons for penetrations of walls, ceilings, and floors.

M. Install sleeves for pipes passing through concrete and masonry walls, gypsum-board partitions, and concrete floor and roof slabs.

N. Aboveground, Exterior-Wall Pipe Penetrations: Seal penetrations using sleeves and mechanical sleeve seals. Select sleeve size to allow for 1-inch annular clear space between pipe and sleeve for installing mechanical sleeve seals.

1. Install steel pipe for sleeves smaller than 6 inches in diameter.
2. Install cast-iron "wall pipes" for sleeves 6 inches and larger in diameter.
3. Mechanical Sleeve Seal Installation: Select type and number of sealing elements required for pipe material and size. Position pipe in center of sleeve. Assemble mechanical sleeve seals and install in annular space between pipe and sleeve. Tighten bolts against pressure plates that cause sealing elements to expand and make watertight seal.

O. Underground, Exterior-Wall Pipe Penetrations: Install cast-iron "wall pipes" for sleeves. Seal pipe penetrations using mechanical sleeve seals. Select sleeve size to allow for 1-inch annular clear space between pipe and sleeve for installing mechanical sleeve seals.

1. Mechanical Sleeve Seal Installation: Select type and number of sealing elements required for pipe material and size. Position pipe in center of sleeve. Assemble mechanical sleeve seals and install in annular space between pipe and sleeve. Tighten bolts against pressure plates that cause sealing elements to expand and make watertight seal.

P. Fire-Barrier Penetrations: Maintain indicated fire rating of walls, partitions, ceilings, and floors at pipe penetrations. Seal pipe penetrations with firestop materials. Refer to Division 07 Section "Penetration Firestopping" for materials.

Q. Verify final equipment locations for roughing-in.

R. Refer to equipment specifications in other Sections of these Specifications for roughing-in requirements.

3.3 PIPING JOINT CONSTRUCTION

A. Join pipe and fittings according to the following requirements and Division 22 Sections specifying piping systems.

B. Ream ends of pipes and tubes and remove burrs. Bevel plain ends of steel pipe.

C. Remove scale, slag, dirt, and debris from inside and outside of pipe and fittings before assembly.

D. Soldered Joints: Apply ASTM B 813, water-flushable flux, unless otherwise indicated, to tube end. Construct joints according to ASTM B 828 or CDA's "Copper Tube Handbook," using lead-free solder alloy complying with ASTM B 32.

E. Brazed Joints: Construct joints according to AWS's "Brazing Handbook," "Pipe and Tube" Chapter, using copper-phosphorus brazing filler metal complying with AWS A5.8.

F. Threaded Joints: Thread pipe with tapered pipe threads according to ASME B1.20.1. Cut threads full and clean using sharp dies. Ream threaded pipe ends to remove burrs and restore full ID. Join pipe fittings and valves as follows:

1. Apply appropriate tape or thread compound to external pipe threads unless dry seal threading is specified.
2. Damaged Threads: Do not use pipe or pipe fittings with threads that are corroded or damaged. Do not use pipe sections that have cracked or open welds.

G. Welded Joints: Construct joints according to AWS D10.12, using qualified processes and welding operators according to Part 1 "Quality Assurance" Article.

H. Flanged Joints: Select appropriate gasket material, size, type, and thickness for service application. Install gasket concentrically positioned. Use suitable lubricants on bolt threads.

I. Plastic Piping Solvent-Cement Joints: Clean and dry joining surfaces. Join pipe and fittings according to the following:

1. Comply with ASTM F 402, for safe-handling practice of cleaners, primers, and solvent cements.
2. ABS Piping: Join according to ASTM D 2235 and ASTM D 2661 Appendixes.
3. CPVC Piping: Join according to ASTM D 2846/D 2846M Appendix.
4. PVC Pressure Piping: Join schedule number ASTM D 1785, PVC pipe and PVC socket fittings according to ASTM D 2672. Join other-than-schedule-number PVC pipe and socket fittings according to ASTM D 2855.
5. PVC Nonpressure Piping: Join according to ASTM D 2855.
6. PVC to ABS Nonpressure Transition Fittings: Join according to ASTM D 3138 Appendix.

J. Plastic Pressure Piping Gasketed Joints: Join according to ASTM D 3139.

K. Plastic Nonpressure Piping Gasketed Joints: Join according to ASTM D 3212.

L. PE Piping Heat-Fusion Joints: Clean and dry joining surfaces by wiping with clean cloth or paper towels. Join according to ASTM D 2657.

1. Plain-End Pipe and Fittings: Use butt fusion.
2. Plain-End Pipe and Socket Fittings: Use socket fusion.

M. Fiberglass Bonded Joints: Prepare pipe ends and fittings, apply adhesive, and join according to pipe manufacturer's written instructions.

3.4 PIPING CONNECTIONS

A. Make connections according to the following, unless otherwise indicated:

1. Install unions, in piping NPS 2 and smaller, adjacent to each valve and at final connection to each piece of equipment.
2. Install flanges, in piping NPS 2-1/2 and larger, adjacent to flanged valves and at final connection to each piece of equipment.

3. Dry Piping Systems: Install dielectric unions and flanges to connect piping materials of dissimilar metals.

4. Wet Piping Systems: Install dielectric coupling and nipple fittings to connect piping materials of dissimilar metals.

3.5 EQUIPMENT INSTALLATION - COMMON REQUIREMENTS

A. Install equipment to allow maximum possible headroom unless specific mounting heights are not indicated.

B. Install equipment level and plumb, parallel and perpendicular to other building systems and components in exposed interior spaces, unless otherwise indicated.

C. Install plumbing equipment to facilitate service, maintenance, and repair or replacement of components. Connect equipment for ease of disconnecting, with minimum interference to other installations. Extend grease fittings to accessible locations.

D. Install equipment to allow right of way for piping installed at required slope.

3.6 CONCRETE BASES

A. Concrete Bases: Anchor equipment to concrete base according to equipment manufacturer's written instructions and according to seismic codes at Project.

1. Construct concrete bases of dimensions indicated, but not less than 4 inches larger in both directions than supported unit.
2. Install dowel rods to connect concrete base to concrete floor. Unless otherwise indicated, install dowel rods on 18-inch centers around the full perimeter of the base.
3. Install epoxy-coated anchor bolts for supported equipment that extend through concrete base, and anchor into structural concrete floor.
4. Place and secure anchorage devices. Use supported equipment manufacturer's setting drawings, templates, diagrams, instructions, and directions furnished with items to be embedded.
5. Install anchor bolts to elevations required for proper attachment to supported equipment.
6. Install anchor bolts according to anchor-bolt manufacturer's written instructions.
7. Use 3000-psi, 28-day compressive-strength concrete and reinforcement as specified in Division 03 Section "Cast-in-Place Concrete."

3.7 ERECTION OF METAL SUPPORTS AND ANCHORAGES.

A. Refer to Division 05 Section "Metal Fabrications" for structural steel.

B. Cut, fit, and place miscellaneous metal supports accurately in location, alignment, and elevation to support and anchor plumbing materials and equipment.

C. Field Welding: Comply with AWS D1.1.

3.8 GROUTING

A. Mix and install grout for plumbing equipment base bearing surfaces, pump and other equipment base plates, and anchors.

B. Clean surfaces that will come into contact with grout.

C. Provide forms as required for placement of grout.

D. Avoid air entrapment during placement of grout.

E. Place grout, completely filling equipment bases.

F. Place grout on concrete bases and provide smooth bearing surface for equipment.

G. Place grout around anchors.

H. Cure placed grout.

END OF SECTION 220500

SECTION 220517 - SLEEVES AND SLEEVE SEALS FOR PLUMBING PIPING

PART 1 - GENERAL

1.1 RELATED DOCUMENTS

A. Drawings and general provisions of the Contract, including General and Supplementary Conditions and Division 01 Specification Sections, apply to this Section.

1.2 SUMMARY

A. Section Includes:

1. Sleeves.
2. Stack-sleeve fittings.
3. Sleeve-seal systems.
4. Sleeve-seal fittings.
5. Grout.
6. Silicone sealants.

1.3 ACTION SUBMITTALS

A. Submittals shall be formatted per Section 220000 “General Plumbing Requirements”. The manufacturer shall resubmit the specification section showing compliance with each respective paragraphs and specified items and features in that particular specification section. All **exceptions** shall be clearly identified by referencing respective paragraph and other requirements. Next to each specification item, indicate the following:

1. “No Exception Taken”.
2. “Exception”. All exceptions shall be clearly identified by referencing respective paragraph and other requirements along with proposed alternative.

B. Product Data: For each type of product.

PART 2 - PRODUCTS

2.1 SLEEVES

A. Steel Pipe Sleeves: ASTM A53/A53M, Type E, Grade B, Schedule 40, galvanized, with plain ends and integral welded water stop collar.

B. Galvanized-Steel Sheet Sleeves: 0.0239-inch minimum thickness; round tube closed with welded longitudinal joint.

2.2 STACK-SLEEVE FITTINGS

A. Manufactured, cast-iron sleeve with integral clamping flange for use in waterproof floors and roofs. Include clamping ring, bolts, and nuts for membrane flashing.

1. Underdeck Clamp: Clamping ring with setscrews.

2.3 SLEEVE-SEAL SYSTEMS

A. Manufacturers: Subject to compliance with requirements, provide products by one of the following:

1. Thunderline Modular Seals; Link-Seal
2. Metraflex Co.
3. Advance Products & Systems, Inc.

B. Description:

1. Modular sealing-element unit, designed for field assembly, for filling annular space between piping and sleeve.
2. Designed to form a hydrostatic seal of 20 psig minimum.
3. Sealing Elements: EPDM-rubber interlocking links shaped to fit surface of pipe. Include type and number required for pipe material and size of pipe.
4. Pressure Plates: Stainless steel.
5. Connecting Bolts and Nuts: Stainless steel of length required to secure pressure plates to sealing elements.
6. Link-Seal shall be the basis of design.

2.4 GROUT

A. Description: Non-shrink, for interior and exterior sealing openings in non-fire-rated walls or floors.

B. Standard: ASTM C1107/C1107M, Grade B, post-hardening and volume-adjusting, dry, hydraulic-cement grout.

C. Design Mix: 5000-psi, 28-day compressive strength.

D. Packaging: Premixed and factory packaged.

2.5 SILICONE SEALANTS

A. Silicone, S, NS, 25, NT: Single-component, non-sag, plus 25 percent and minus 25 percent movement capability, nontraffic-use, neutral-curing silicone joint sealant, ASTM C920, Type S, Grade NS, Class 25, Use NT.

B. Silicone, S, P, 25, T, NT: Single-component, pourable, plus 25 percent and minus 25 percent movement capability, traffic- and nontraffic-use, neutral-curing silicone joint sealant; ASTM C920, Type S, Grade P, Class 25, Uses T and NT. Grade P Pourable (self-leveling) formulation is for opening in floors and other horizontal surfaces that are not fire rated.

C. Silicone Foam: Multicomponent, silicone-based liquid elastomers that, when mixed, expand and cure in place to produce a flexible, non-shrinking foam.

PART 3 - EXECUTION

3.1 SLEEVE INSTALLATION

A. Sleeves are not required for core-drilled holes, except where spill control is required

B. Install sleeves for piping passing through penetrations in floors, partitions, roofs, and walls.

C. For sleeves that will have sleeve-seal system installed, select sleeves of size large enough to provide 1-inch annular clear space between piping and concrete slabs and walls.

1. Sleeves are not required for core-drilled holes

D. Install sleeves in concrete floors, concrete roof slabs, and concrete walls as new slabs and walls are constructed.

1. Permanent sleeves are not required for holes in slabs formed by molded-PE or -PP sleeves.
2. Cut sleeves to length for mounting flush with both surfaces.

a. Exception: Extend sleeves installed in floors of mechanical equipment areas or other wet areas 2 inches above finished floor level.

3. Using grout, seal the space outside of sleeves in slabs and walls without sleeve-seal system.

E. Install sleeves for pipes passing through interior partitions.

1. Cut sleeves to length for mounting flush with both surfaces.
2. Install sleeves that are large enough to provide 1/4-inch annular clear space between sleeve and pipe or pipe insulation.
3. Seal annular space between sleeve and piping or piping insulation; use joint sealants appropriate for size, depth, and location of joint.

F. Fire-Resistance-Rated Penetrations, Horizontal Assembly Penetrations, and Smoke Barrier Penetrations: Maintain indicated fire or smoke rating of walls, partitions, ceilings, and floors at pipe penetrations. Seal pipe penetrations with fire- and smoke-stop materials. Comply with requirements for firestopping and fill materials specified in Section 078413 "Penetration Firestopping."

3.2 STACK-SLEEVE-FITTING INSTALLATION

A. Install stack-sleeve fittings in new slabs as slabs are constructed.

1. Install fittings that are large enough to provide 1/4-inch annular clear space between sleeve and pipe or pipe insulation.
2. Secure flashing between clamping flanges for pipes penetrating floors with membrane waterproofing. Comply with requirements for flashing specified in Section 076200 "Sheet Metal Flashing and Trim."
3. Install section of cast-iron soil pipe to extend sleeve to 2 inches above finished floor level.
4. Extend cast-iron sleeve fittings below floor slab as required to secure clamping ring if ring is specified.
5. Use silicone sealant to seal the space around outside of stack-sleeve fittings.

B. Fire-Resistance-Rated Penetrations, Horizontal Assembly Penetrations, and Smoke Barrier Penetrations: Maintain indicated fire or smoke rating of floors at pipe penetrations. Seal pipe penetrations with fire- and smoke-stop materials. Comply with requirements for firestopping specified in Section 078413 "Penetration Firestopping."

3.3 SLEEVE-SEAL-SYSTEM INSTALLATION

A. Install sleeve-seal systems in sleeves in exterior concrete walls and slabs-on-grade at service piping entries into building.

B. Select type, size, and number of sealing elements required for piping material and size and for sleeve ID or hole size. Position piping in center of sleeve. Center piping in penetration, assemble sleeve-seal system components, and install in annular space between piping and sleeve. Tighten bolts against pressure plates that cause sealing elements to expand and make a watertight seal.

3.4 SLEEVE-SEAL-FITTING INSTALLATION

A. Install sleeve-seal fittings in new walls and slabs as they are constructed.

B. Assemble fitting components of length to be flush with both surfaces of concrete slabs and walls. Position water stop flange to be centered in concrete slab or wall.

C. Secure nailing flanges to concrete forms.

D. Use grout to seal the space around outside of sleeve-seal fittings.

3.5 SLEEVE AND SLEEVE-SEAL SCHEDULE

A. Use sleeves and sleeve seals for the following piping-penetration applications:

1. Exterior Concrete Walls above Grade:

a. Piping Smaller Than NPS 6: Galvanized Steel pipe sleeves.
b. Piping NPS 6 and Larger: Galvanized Steel pipe sleeves .

2. Exterior Concrete Walls below Grade:

    a. Piping Smaller Than NPS 6: Galvanized Steel pipe sleeves with sleeve-seal system.

        1) Select sleeve size to allow for 1-inch annular clear space between piping and sleeve for installing sleeve-seal system.

    b. Piping NPS 6and Larger: Galvanized Steel pipe sleeves with sleeve-seal system.

        1) Select sleeve size to allow for 1-inch annular clear space between piping and sleeve for installing sleeve-seal system.

3. Concrete Slabs-on-Grade:

    a. Piping Smaller Than NPS 6: Galvanized steel pipe sleeves with sleeve-seal system.

        1) Select sleeve size to allow for 1-inch annular clear space between piping and sleeve for installing sleeve-seal system.

    b. Piping NPS 6 and Larger: Galvanized steel pipe sleeves with sleeve-seal system.

        1) Select sleeve size to allow for 1-inch annular clear space between piping and sleeve for installing sleeve-seal system.

4. Concrete Slabs above Grade:

    a. Piping Smaller Than NPS 6: Steel pipe sleeves.
    b. Piping NPS 6 and Larger: Steel pipe sleeves.

5. Interior Partitions:

    a. Piping Smaller Than NPS 6: Steel pipe sleeves.
    b. Piping NPS 6and Larger: Galvanized-steel sheet sleeves.

END OF SECTION 220517

SECTION 220518 - ESCUTCHEONS FOR PLUMBING PIPING

PART 1 - GENERAL

1.1 RELATED DOCUMENTS

A. Drawings and general provisions of the Contract, including General and Supplementary Conditions and Division 01 Specification Sections, apply to this Section.

1.2 SUMMARY

A. Section Includes:

1. Escutcheons.
2. Floor plates.

1.3 DEFINITIONS

A. Existing Piping to Remain: Existing piping that is not to be removed and that is not otherwise indicated to be removed and salvaged, or removed and reinstalled.

1.4 ACTION SUBMITTALS

A. Submittals shall be formatted per Section 220000 “General Plumbing Requirements”. The manufacturer shall resubmit the specification section showing compliance with each respective paragraphs and specified items and features in that particular specification section. All **exceptions** shall be clearly identified by referencing respective paragraph and other requirements. Next to each specification item, indicate the following:

1. “No Exception Taken”.
2. “Exception”. All exceptions shall be clearly identified by referencing respective paragraph and other requirements along with proposed alternative.

B. Product Data: For each type of product.

PART 2 - PRODUCTS

2.1 MANUFACTURERS

A. Manufacturers: Subject to compliance with requirements, provide products by one of the following:

1. BrassCraft Manufacturing Co.; a Masco company.

2. Keeney Manufacturing Company (The).
3. Mid-America Fittings, Inc.

2.2 ESCUTCHEONS

A. One-Piece, Steel Type: With polished, chrome-plated finish and setscrew fastener.

B. One-Piece, Stainless-Steel Type: With polished stainless-steel finish.

C. One-Piece, Cast-Brass Type: With polished, chrome-plated finish and setscrew fastener.

D. One-Piece, Deep-Pattern Type: Deep-drawn, box-shaped steel with polished, chrome-plated finish and spring-clip fasteners.

E. One-Piece, Stamped-Steel Type: With polished, chrome-plated finish and spring-clip fasteners.

F. Split-Plate, Stamped-Steel Type: With polished, chrome-plated finish; concealed and exposed-rivet hinge; and spring-clip fasteners.

2.3 FLOOR PLATES

A. Split Floor Plates: Cast brass with concealed hinge.

PART 3 - EXECUTION

3.1 INSTALLATION

A. Install escutcheons for piping penetrations of walls, ceilings, and finished floors.

B. Install escutcheons with ID to closely fit around pipe, tube, and insulation of insulated piping and with OD that completely covers opening.

1. Escutcheons for New Piping:

a. Piping with Fitting or Sleeve Protruding from Wall: One-piece, deep pattern.
b. Chrome-Plated Piping: One-piece steel cast brass or split-casting brass with polished, chrome-plated finish.
c. Insulated Piping: One-piece steel with polished, chrome-plated or polished brass finish.
d. Insulated Piping: One-piece stainless steel with polished stainless-steel finish.
e. Insulated Piping: One-piece cast brass with polished, chrome-plated or polished brass finish.
f. Insulated Piping: One-piece stamped steel or split-plate, stamped steel with concealed hinge or split-plate, stamped steel with exposed-rivet hinge with polished, chrome-plated finish.
g. Bare Piping at Wall and Floor Penetrations in Finished Spaces: One-piece steel with polished, chrome-plated or polished brass finish.

h. Bare Piping at Wall and Floor Penetrations in Finished Spaces: One-piece stainless steel with polished stainless-steel finish.
i. Bare Piping at Wall and Floor Penetrations in Finished Spaces: One-piece cast brass with polished, chrome-plated or polished brass finish.
j. Bare Piping at Wall and Floor Penetrations in Finished Spaces: One-piece stamped steel or split-plate, stamped steel with concealed hinge or split-plate, stamped steel with exposed-rivet hinge with polished, chrome-plated finish.
k. Bare Piping at Ceiling Penetrations in Finished Spaces: One-piece steel with polished, chrome-plated or polished brass finish.
l. Bare Piping at Ceiling Penetrations in Finished Spaces: One-piece stainless steel with polished stainless-steel finish.
m. Bare Piping at Ceiling Penetrations in Finished Spaces: One-piece cast brass with polished, chrome-plated or polished brass finish.
n. Bare Piping at Ceiling Penetrations in Finished Spaces: One-piece stamped steel or split-plate, stamped steel with concealed hinge or split-plate, stamped steel with exposed-rivet hinge with polished, chrome-plated finish.
o. Bare Piping in Unfinished Service Spaces: One-piece steel with polished, chrome-plated finish.
p. Bare Piping in Unfinished Service Spaces: One-piece cast brass with polished, chrome-plated or rough-brass finish.
q. Bare Piping in Unfinished Service Spaces: One-piece stamped steel or split-plate, stamped steel with concealed hinge or split-plate, stamped steel with exposed-rivet hinge with polished, chrome-plated finish.
r. Bare Piping in Equipment Rooms: One-piece steel with polished, chrome-plated finish.
s. Bare Piping in Equipment Rooms: One-piece cast brass with polished, chrome-plated finish.
t. Bare Piping in Equipment Rooms: One-piece stamped steel or split-plate, stamped steel with concealed hinge or split-plate, stamped steel with exposed-rivet hinge with polished, chrome-plated finish.

2. Escutcheons for Existing Piping to Remain:

a. Chrome-Plated Piping: Split-casting, stamped steel with concealed or exposed-rivet hinge with polished, chrome-plated finish.
b. Insulated Piping: Split-plate, stamped steel with concealed or exposed-rivet hinge with polished, chrome-plated finish
c. Bare Piping at Wall and Floor Penetrations in Finished Spaces: Split-plate, stamped steel with concealed or exposed-rivet hinge with polished, chrome-plated finish.
d. Bare Piping at Ceiling Penetrations in Finished Spaces: Split-plate, stamped steel with concealed or exposed-rivet hinge with polished, chrome-plated finish.
e. Bare Piping in Unfinished Service Spaces: Split-plate, stamped steel with concealed or exposed-rivet hinge with polished, chrome-plated finish.
f. Bare Piping in Equipment Rooms: Split-plate, stamped steel with concealed or exposed-rivet hinge with polished, chrome-plated finish.

C. Install floor plates for piping penetrations of equipment-room floors.

D. Install floor plates with ID to closely fit around pipe, tube, and insulation of piping and with OD that completely covers opening.

1. New Piping: One-piece, floor plate.
2. Existing Piping: Split floor plate.

3.2 FIELD QUALITY CONTROL

A. Using new materials, replace broken and damaged escutcheons and floor plates.

END OF SECTION 220518

SECTION 220519 - METERS AND GAGES FOR PLUMBING PIPING

PART 1 - GENERAL

1.1 RELATED DOCUMENTS

A. Drawings and general provisions of the Contract, including General and Supplementary Conditions and Division 01 Specification Sections, apply to this Section.

1.2 SUMMARY

A. Section Includes:

1. Bimetallic-actuated thermometers.
2. Filled-system thermometers.
3. Thermowells.
4. Dial-type pressure gages.
5. Gage attachments.
6. Test plugs.

B. Related Requirements:

1. Section 221113 "Domestic Water Piping and Fittings" for domestic water meters and combined domestic meters outside the building.
2. Section 221119 "Domestic Water Piping Specialties" for water meters.

1.3 ACTION SUBMITTALS

A. Submittals shall be formatted per Section 220000 “General Plumbing Requirements”. The manufacturer shall resubmit the specification section showing compliance with each respective paragraphs and specified items and features in that particular specification section. All **exceptions** shall be clearly identified by referencing respective paragraph and other requirements. Next to each specification item, indicate the following:

1. “No Exception Taken”.
2. “Exception”. All exceptions shall be clearly identified by referencing respective paragraph and other requirements along with proposed alternative.

B. Product Data: For each type of product.

1.4 INFORMATIONAL SUBMITTALS

A. Product Certificates: For each type of meter and gage from manufacturer.

1.5 CLOSEOUT SUBMITTALS

A. Operation and Maintenance Data: For meters and gages to include in operation and maintenance manuals.

PART 2 - PRODUCTS

2.1 BIMETALLIC-ACTUATED THERMOMETERS

A. Manufacturers

1. Ashcroft Commercial Inc.
2. Trerice, H. O. Co.
3. Weiss Instruments, Inc.
4. Or approved equal.

B. Standard: ASME B40.200.

C. Case: Liquid-filled and sealed type(s); stainless steel with 3-inch nominal diameter.

D. Dial: Nonreflective aluminum with permanently etched scale markings and scales in degrees F and degrees C.

E. Connector Type(s): Union joint, adjustable angle, with unified-inch screw threads.

F. Connector Size: 1/2 inch, with ASME B1.1 screw thread.

G. Stem: 0.25 or 0.375 inch in diameter; stainless steel.

H. Window: Double strength glass.

I. Ring: Stainless steel.

J. Element: Bimetal coil.

K. Pointer: Dark-colored metal.

L. Accuracy: Plus, or minus 1 percent of scale range.

2.2 FILLED-SYSTEM THERMOMETERS

A. Manufacturers

1. Ashcroft Commercial Inc.
2. Trerice, H. O. Co.
3. Weiss Instruments, Inc.
4. Or approved equal.

B. Direct-Mounted, Metal-Case, Vapor-Actuated Thermometers:

1. Standard: ASME B40.200.
2. Case: Sealed type, cast aluminum; 4-1/2-inch nominal diameter.
3. Element: Bourdon tube or other type of pressure element.
4. Movement: Mechanical, with link to pressure element and connection to pointer.
5. Dial: Nonreflective aluminum with permanently etched scale markings graduated in deg F.
6. Pointer: Dark-colored metal.
7. Window: Double strength glass.
8. Ring: Stainless steel.
9. Connector Type(s): Union joint, adjustable, 180 degrees in vertical plane, 360 degrees in horizontal plane, with locking device; with ASME B1.1 screw threads.
10. Thermal System: Liquid-filled bulb in copper-plated steel, aluminum, or brass stem and of length to suit installation.

    a. Design for Thermowell Installation: Bare stem.

11. Accuracy: Plus or minus 1 percent of scale range.

2.3 THERMOWELLS

A. Thermowells:

1. Standard: ASME B40.200.
2. Description: Pressure-tight, socket-type fitting made for insertion into piping tee fitting.
3. Material for Use with Copper Tubing: CNR or CUNI.
4. Material for Use with Steel Piping: CRES.
5. Type: Stepped shank unless straight or tapered shank is indicated.
6. External Threads: NPS 1/2, NPS 3/4, or NPS 1, ASME B1.20.1 pipe threads.
7. Internal Threads: 1/2, 3/4, and 1 inch, with ASME B1.1 screw threads.
8. Bore: Diameter required to match thermometer bulb or stem.
9. Insertion Length: Length required to match thermometer bulb or stem.
10. Lagging Extension: Include on thermowells for insulated piping and tubing.
11. Bushings: For converting size of thermowell's internal screw thread to size of thermometer connection.

B. Heat-Transfer Medium: Mixture of graphite and glycerin.

2.4 PRESSURE GAGES

A. Manufacturers

1. Ashcroft Commercial Inc.
2. Trerice, H. O. Co.
3. Weiss Instruments, Inc.
4. Or approved equal.

B. Direct-Mounted, Metal-Case, Dial-Type Pressure Gages:

1. Standard: ASME B40.100.
2. Case: Liquid-filled type(s); cast aluminum; 4-1/2-inch nominal diameter.
3. Pressure-Element Assembly: Bourdon tube unless otherwise indicated.
4. Pressure Connection: Brass, with NPS 1/2, ASME B1.20.1 pipe threads and bottom-outlet type unless back-outlet type is indicated.
5. Movement: Mechanical, with link to pressure element and connection to pointer.
6. Dial: Nonreflective aluminum with permanently etched scale markings graduated in psi.
7. Pointer: Dark-colored metal.
8. Window: Double strength glass.
9. Ring: Stainless steel.
10. Accuracy: Grade A, plus or minus 1 percent of middle half of scale range.

2.5 GAGE ATTACHMENTS

A. Snubbers: ASME B40.100, brass; with NPS 1/2, ASME B1.20.1 pipe threads and piston-type surge-dampening device. Include extension for use on insulated piping.

B. Valves: Brass ball, with NPS 1/2, ASME B1.20.1 pipe threads.

2.6 TEST PLUGS

A. Description: Test-station fitting made for insertion into piping tee fitting.

B. Body: Brass or stainless steel with core inserts and gasketed and threaded cap. Include extended stem on units to be installed in insulated piping.

C. Thread Size: NPS 1/2, ASME B1.20.1 pipe thread.

D. Minimum Pressure and Temperature Rating: 500 psig at 200 deg F.

E. Core Inserts: EPDM self-sealing rubber.

PART 3 - EXECUTION

3.1 INSTALLATION

A. Install thermowells with socket extending to center of pipe and in vertical position in piping tees.

B. Install thermowells of sizes required to match thermometer connectors. Include bushings if required to match sizes.

C. Install thermowells with extension on insulated piping.

D. Fill thermowells with heat-transfer medium.

E. Install direct-mounted thermometers in thermowells and adjust vertical and tilted positions.

F. Provide remote-mounted thermometer bulbs in thermowells and install cases on panels; connect cases with tubing and support tubing to prevent kinks. Use minimum tubing length.

G. Provide direct-mounted pressure gages in piping tees with pressure gage located on pipe at the most readable position.

H. Install remote-mounted pressure gages on panel.

I. Provide valve and snubber in piping for each pressure gage for fluids.

J. Provide test plugs in piping tees.

K. Provide thermometers in the following locations:

1. Inlet and outlet of each water heater.
2. Inlets and outlets of each domestic water heat exchanger.
3. Inlet and outlet of each domestic hot-water storage tank.
4. Inlet and outlet of each remote domestic water chiller.

L. Provide pressure gages in the following locations:

1. Building water service entrance into building.
2. Inlet and outlet of each pressure-reducing valve.
3. Suction and discharge of each domestic water pump.

3.2 CONNECTIONS

A. Install meters and gages adjacent to machines and equipment to allow service and maintenance of meters, gages, machines, and equipment.

3.3 ADJUSTING

A. Adjust faces of meters and gages to proper angle for best visibility.

3.4 THERMOMETER SCHEDULE

A. Thermometers at inlet and outlet of each domestic water heater shall be one of the following:

1. Liquid-filled, bimetallic-actuated type.

B. Thermometers at inlets and outlets of each domestic water heat exchanger shall be one of the following:

1. Liquid-filled, bimetallic-actuated type.

C. Thermometers at inlet and outlet of each domestic hot-water storage tank shall be one of the following:

1. Liquid-filled, bimetallic-actuated type.

D. Thermometer stems shall be of length to match thermowell insertion length.

3.5 THERMOMETER SCALE-RANGE SCHEDULE

A. Scale Range for Domestic Cold-Water Piping: 0 to 100 deg F.

B. Scale Range for Domestic Cold-Water Piping: 0 to 150 deg F.

C. Scale Range for Domestic Cold-Water Piping: 30 to 240 deg F.

D. Scale Range for Domestic Hot-Water Piping: 0 to 250 deg F.

E. Scale Range for Domestic Hot-Water Piping: 20 to 240 deg F.

F. Scale Range for Domestic Hot-Water Piping: 30 to 240 deg F.

G. Scale Range for Domestic Cooled-Water Piping: 0 to 100 deg F.

H. Scale Range for Domestic Cooled-Water Piping: 0 to 150 deg F.

3.6 PRESSURE-GAGE SCHEDULE

A. Pressure gages at discharge of each water service into building shall be one of the following:

1. Liquid-filled, direct-mounted, metal case.

B. Pressure gages at inlet and outlet of each water pressure-reducing valve shall be one of the following:

1. Liquid-filled, direct-mounted, metal case.

C. Pressure gages at suction and discharge of each domestic water pump shall be one of the following:

1. Liquid-filled, direct-mounted, metal case.

3.7 PRESSURE-GAGE SCALE-RANGE SCHEDULE

A. Scale Range for Water Service Piping: 0 to 100 psi.

B. Scale Range for Water Service Piping: 0 to 160 psi.

C. Scale Range for Water Service Piping: 0 to 200 psi.

D. Scale Range for Domestic Water Piping: 0 to 100 psi.

E. Scale Range for Domestic Water Piping: 0 to 160 psi.

F. Scale Range for Domestic Water Piping: 0 to 200 psi.

G. Scale Range for Domestic Water Piping: 0 to 300 psi.

END OF SECTION 220519

SECTION 220523 – GENERAL DUTY VALVES FOR PLUMBING PIPING

PART 1 - GENERAL

1.1 RELATED DOCUMENTS

A. Drawings and general provisions of the Contract, including General and Supplementary Conditions and Division 01 Specification Sections, apply to this Section.

1.2 SUMMARY

A. Section Includes:

1. Brass ball valves.
2. Bronze ball valves.
3. Bronze lift check valves.
4. Bronze swing check valves.
5. Bronze gate valves.
6. CPVC ball valves.
7. CPVC swing check valves.
8. Chainwheels.

1.3 DEFINITIONS

A. CWP: Cold working pressure.

B. EPDM: Ethylene propylene-diene terpolymer rubber.

C. NBR: Acrylonitrile-butadiene, Buna-N, or nitrile rubber.

D. NRS: Nonrising stem.

E. OS&Y: Outside screw and yoke.

F. RS: Rising stem.

G. SWP: Steam working pressure.

1.4 ACTION SUBMITTALS

A. Submittals shall be formatted per Section 220000 “General Plumbing Requirements”. The manufacturer shall resubmit the specification section showing compliance with each respective paragraphs and specified items and features in that particular specification section. All **exceptions** shall be clearly identified by referencing respective paragraph and other requirements. Next to each specification item, indicate the following:

1. "No Exception Taken".
2. "Exception". All exceptions shall be clearly identified by referencing respective paragraph and other requirements along with proposed alternative.

B. Product Data: For each type of valve.

1. Certification that products comply with NSF 61and NSF 372.

C. The Manufacturer, Contractor or Supplier Shall Include A Written Statement That The Submitted Equipment, Hardware Or Accessory Complies With The Requirement Of This Particular Specification Section.

1. The Manufacturer Shall Resubmit This Specification Section Showing Compliance with Each Respective Paragraphs and Specified Items And Features.
2. All Exceptions Shall Be Clearly Identified by Referencing Respective Paragraph And Other Requirements Along With Proposed Alternative.
3. Individual or Partial Submittals Are Not Acceptable and Will Be Returned Without Review.

1.5 QUALITY ASSURANCE

A. Source Limitations for Valves: Obtain each type of valve from single source from single manufacturer.

B. ASME Compliance:

1. ASME B16.10 and ASME B16.34 for ferrous valve dimensions and design criteria.
2. ASME B31.1 for power piping valves.
3. ASME B31.9 for building services piping valves

C. NSF Compliance: NSF 61 for valve materials for potable-water service.

1.6 DELIVERY, STORAGE, AND HANDLING

A. Prepare valves for shipping as follows:

1. Protect internal parts against rust and corrosion.
2. Protect threads, flange faces, and soldered ends.
3. Protect threads, flange faces, grooves, and weld ends.
4. Set ball valves open to minimize exposure of functional surfaces.
5. Set check valves in either closed or open position.
6. Set gate valves closed to prevent rattling.
7. Set butterfly valves closed or slightly open.

B. Use the following precautions during storage:

1. Maintain valve end protection.

2. Store valves indoors and maintain at higher-than-ambient-dew-point temperature. If outdoor storage is necessary, store valves off the ground in watertight enclosures.

C. Use sling to handle large valves; rig sling to avoid damage to exposed parts. Do not use operating handles or stems as lifting or rigging points.

PART 2 - PRODUCTS

2.1 GENERAL REQUIREMENTS FOR VALVES

A. Source Limitations for Valves: Obtain each type of valve from single source from single manufacturer.

B. ASME Compliance:

1. ASME B1.20.1 for threads for threaded end valves.
2. ASME B16.1 for flanges on iron valves.
3. ASME B16.5 for flanges on steel valves.
4. ASME B16.10 and ASME B16.34 for ferrous valve dimensions and design criteria.

5. ASME B16.18 for solder-joint connections.
6. ASME B31.9 for building services piping valves.

C. AWWA Compliance: Comply with AWWA C606 for grooved-end connections.

D. NSF Compliance: NSF 61 and NSF 372 for valve materials for potable-water service.

E. Bronze valves shall be made with dezincification-resistant materials. Bronze valves made with copper alloy (brass) containing more than 15 percent zinc are not permitted.

F. Valve Pressure-Temperature Ratings: Not less than indicated and as required for system pressures and temperatures.

G. RS Valves in Insulated Piping: With 2-inch stem extensions.

H. Valve Sizes: Same as upstream piping unless otherwise indicated.

I. Valve Bypass and Drain Connections: MSS SP-45.

J. Valve Actuator Types:

1. Gear Actuator: For quarter-turn valves NPS 8 and larger.
2. Handlever: For quarter-turn valves smaller than NPS 6.
3. Chainwheel: Device for attachment to gear, handlever, or stem; of size and with chain for mounting height, according to "Valve Installation" Article.

K. Valves in Insulated Piping:

1. Include 2-inch stem extensions.

2. Extended operating handles of nonthermal-conductive material and protective sleeves that allow operation of valves without breaking vapor seals or disturbing insulation.
3. Memory stops that are fully adjustable after insulation is applied.

2.2 BRASS BALL VALVES

A. Brass Ball Valves, Two-Piece with Full Port and Brass Trim, Threaded or Soldered Ends:

1. Manufacturers: Subject to compliance with requirements, available manufacturers offering products that may be incorporated into the Work include, but are not limited to the following:

   a. Apollo Flow Controls; Conbraco Industries, Inc.
   b. NIBCO INC.
   c. Red White Valve Corp.

2. Description:

   a. Standard: MSS SP-110 or MSS SP-145.
   b. CWP Rating: 600 psig.
   c. Body Design: Two piece.
   d. Body Material: Forged brass.
   e. Ends: Threaded and soldered.
   f. Seats: PTFE.
   g. Stem: Brass.
   h. Ball: Chrome-plated brass.
   i. Port: Full.

B. Brass Ball Valves, Three-Piece with Full Port and Brass Trim:

1. Manufacturers: Subject to compliance with requirements, available manufacturers offering products that may be incorporated into the Work include, but are not limited to the following:

   a. Jomar Valve.
   b. KITZ Corporation.
   c. WATTS.

2. Description:

   a. Standard: MSS SP-110.
   b. CWP Rating: 600 psig.
   c. Body Design: Three piece.
   d. Body Material: Forged brass.
   e. Ends: Threaded and soldered.
   f. Seats: PTFE.
   g. Stem: Brass.
   h. Ball: Chrome-plated brass.
   i. Port: Full.

2.3 BRONZE BALL VALVES

A. Bronze Ball Valves, One-Piece with Bronze Trim:

1. Manufacturers: Subject to compliance with requirements, available manufacturers offering products that may be incorporated into the Work include, but are not limited to the following:

   a. Apollo Flow Controls; Conbraco Industries, Inc.
   b. NIBCO INC.
   c. WATTS.

2. Description:

   a. Standard: MSS SP-110.
   b. CWP Rating: 400 psig.
   c. Body Design: One piece.
   d. Body Material: Bronze.
   e. Ends: Threaded.
   f. Seats: PTFE.
   g. Stem: Bronze.
   h. Ball: Chrome-plated brass.
   i. Port: Reduced.

B. Bronze Ball Valves, Two-Piece with Full Port, and Bronze or Brass Trim, Threaded or Soldered Ends:

1. Manufacturers: Subject to compliance with requirements, available manufacturers offering products that may be incorporated into the Work include, but are not limited to the following:

   a. Apollo Flow Controls; Conbraco Industries, Inc.
   b. Milwaukee Valve Company.
   c. NIBCO INC.

2. Description:

   a. Standard: MSS SP-110 or MSS-145.
   b. CWP Rating: 600 psig.
   c. Body Design: Two piece.
   d. Body Material: Bronze.
   e. Ends: Threaded and soldered.
   f. Seats: PTFE.
   g. Stem: Bronze or brass.
   h. Ball: Chrome-plated brass.
   i. Port: Full.

C. Bronze Ball Valves, Two-Piece with Full Port, and Bronze or Brass Trim, Press Ends:

1. Manufacturers: Subject to compliance with requirements, available manufacturers offering products that may be incorporated into the Work include, but are not limited to the following:

   a. Apollo Flow Controls; Conbraco Industries, Inc.
   b. NIBCO INC.
   c. WATTS.

2. Description:

   a. Standard: MSS SP-110 or MSS-145.
   b. CWP Rating: Minimum 200 psig.
   c. Body Design: Two piece.
   d. Body Material: Bronze.
   e. Ends: Press.
   f. Press Ends Connections Rating: Minimum 200 psig.
   g. Seats: PTFE or RTPFE.
   h. Stem: Bronze or brass.
   i. Ball: Chrome-plated brass.
   j. Port: Full.
   k. O-Ring Seal: EPDM or Buna-N.

D. Bronze Ball Valves, Two-Piece with Full Port and Stainless-Steel Trim:

1. Manufacturers: Subject to compliance with requirements, available manufacturers offering products that may be incorporated into the Work include, but are not limited to the following:

   a. Apollo Flow Controls; Conbraco Industries, Inc.
   b. NIBCO INC.
   c. WATTS.

2. Description:

   a. Standard: MSS SP-110 or MSS-145.
   b. CWP Rating: 600 psig.
   c. Body Design: Two piece.
   d. Body Material: Bronze.
   e. Ends: Threaded or soldered.
   f. Seats: PTFE.
   g. Stem: Stainless steel.
   h. Ball: Stainless steel, vented.
   i. Port: Full.

E. Bronze Ball Valves, Three-Piece with Full Port and Bronze or Brass Trim:

1. Manufacturers: Subject to compliance with requirements, available manufacturers offering products that may be incorporated into the Work include, but are not limited to the following:

a. Apollo Flow Controls; Conbraco Industries, Inc.
b. NIBCO INC.
c. WATTS.

2. Description:

a. Standard: MSS SP-110.
b. CWP Rating: 600 psig.
c. Body Design: Three piece.
d. Body Material: Bronze.
e. Ends: Threaded.
f. Seats: PTFE.
g. Stem: Bronze or brass.
h. Ball: Chrome-plated brass.
i. Port: Full.

2.4 BRONZE SWING CHECK VALVES

A. Bronze Swing Check Valves with Bronze Disc, Class 125:

1. Manufacturers: Subject to compliance with requirements, available manufacturers offering products that may be incorporated into the Work include, but are not limited to the following:

a. Apollo Flow Controls; Conbraco Industries, Inc.
b. NIBCO INC.
c. Stockham; Crane Energy Flow Solutions.

2. Description:

a. Standard: MSS SP-80, Type 3.
b. CWP Rating: 200 psig.
c. Body Design: Horizontal flow.
d. Body Material: ASTM B 62, bronze.
e. Ends: Threaded or soldered. See valve schedule articles.
f. Disc: Bronze.

B. Bronze Swing Check Valves with Nonmetallic Disc, Class 125:

1. Manufacturers: Subject to compliance with requirements, available manufacturers offering products that may be incorporated into the Work include, but are not limited to the following:

a. Apollo Flow Controls; Conbraco Industries, Inc.
b. Crane; Crane Energy Flow Solutions.
c. NIBCO INC.

2. Description:

a. Standard: MSS SP-80, Type 4.
b. CWP Rating: 200 psig.
c. Body Design: Horizontal flow.
d. Body Material: ASTM B 62, bronze.
e. Ends: Threaded or soldered. See valve schedule articles.
f. Disc: PTFE.

C. Bronze Swing Check Valves with Bronze Disc, Class 150:

1. Manufacturers: Subject to compliance with requirements, available manufacturers offering products that may be incorporated into the Work include, but are not limited to the following:

a. Apollo Flow Controls; Conbraco Industries, Inc.
b. Crane; Crane Energy Flow Solutions.
c. NIBCO INC.

2. Description:

a. Standard: MSS SP-80, Type 3.
b. CWP Rating: 300 psig.
c. Body Design: Horizontal flow.
d. Body Material: ASTM B 62, bronze.
e. Ends: Threaded or soldered. See valve schedule articles.
f. Disc: Bronze.

D. Bronze Swing Check Valves with Nonmetallic Disc, Class 150:

1. Manufacturers: Subject to compliance with requirements, available manufacturers offering products that may be incorporated into the Work include, but are not limited to the following:

a. Crane; Crane Energy Flow Solutions.
b. Milwaukee Valve Company.
c. NIBCO INC.

2. Description:

a. Standard: MSS SP-80, Type 4.
b. CWP Rating: 300 psig.
c. Body Design: Horizontal flow.
d. Body Material: ASTM B 62, bronze.
e. Ends: Threaded or soldered. See valve schedule articles.
f. Disc: PTFE.

2.5 BRONZE GATE VALVES

A. Bronze Gate Valves, NRS, Class 125:

1. Manufacturers: Subject to compliance with requirements, available manufacturers offering products that may be incorporated into the Work include, but are not limited to the following:

    a. Apollo Flow Controls; Conbraco Industries, Inc.
    b. KITZ Corporation.
    c. NIBCO INC.

2. Description:

    a. Standard: MSS SP-80, Type 1.
    b. CWP Rating: 200 psig.
    c. Body Material: Bronze with integral seat and screw-in bonnet.
    d. Ends: Threaded or solder joint.
    e. Stem: Bronze.
    f. Disc: Solid wedge; bronze.
    g. Packing: Asbestos free.
    h. Handwheel: Malleable iron, bronze, or aluminum.

B. Bronze Gate Valves, RS, Class 125:

1. Manufacturers: Subject to compliance with requirements, available manufacturers offering products that may be incorporated into the Work include, but are not limited to the following:

    a. Apollo Flow Controls; Conbraco Industries, Inc.
    b. KITZ Corporation.
    c. NIBCO INC.

2. Description:

    a. Standard: MSS SP-80, Type 2.
    b. CWP Rating: 200 psig.
    c. Body Material: Bronze with integral seat and screw-in bonnet.
    d. Ends: Threaded or solder joint.
    e. Stem: Bronze.
    f. Disc: Solid wedge; bronze.
    g. Packing: Asbestos free.
    h. Handwheel: Malleable iron, bronze, or aluminum.

C. Bronze Gate Valves, NRS, Class 150:

1. Manufacturers: Subject to compliance with requirements, available manufacturers offering products that may be incorporated into the Work include, but are not limited to the following:

    a. Apollo Flow Controls; Conbraco Industries, Inc.
    b. NIBCO INC.
    c. WATTS.

2. Description:

a. Standard: MSS SP-80, Type 1.
b. CWP Rating: 300 psig.
c. Body Material: Bronze with integral seat and union-ring bonnet.
d. Ends: Threaded.
e. Stem: Bronze.
f. Disc: Solid wedge; bronze.
g. Packing: Asbestos free.
h. Handwheel: Malleable iron, bronze, or aluminum.

D. Bronze Gate Valves, RS, Class 150:

1. Manufacturers: Subject to compliance with requirements, available manufacturers offering products that may be incorporated into the Work include, but are not limited to the following:

a. Apollo Flow Controls; Conbraco Industries, Inc.
b. NIBCO INC.
c. WATTS.

2. Description:

a. Standard: MSS SP-80, Type 2.
b. CWP Rating: 300 psig.
c. Body Material: Bronze with integral seat and union-ring bonnet.
d. Ends: Threaded.
e. Stem: Bronze.
f. Disc: Solid wedge; bronze.
g. Packing: Asbestos free.
h. Handwheel: Malleable iron, bronze, or aluminum.

2.6 CPVC BALL VALVES

A. CPVC Ball Valves:

1. Manufacturers: Subject to compliance with requirements, provide products by one of the following:

a. Georg Fischer Inc.
b. IPEX USA LLC.
c. Spears Manufacturing Company.

2. Description:

a. Standard: MSS SP-122.
b. Pressure Rating and Temperature: 125 psig or 150 psig at 73 deg F temperature.
c. Body Material: CPVC.
d. Body Design: Union or Non-Union type.

e. End Connections for Valves NPS 2 and Smaller: Detachable, socket or threaded.
f. End Connections for Valves NPS 2-1/2 to NPS 4: Detachable, socket, threaded or flanged.
g. Ball: CPVC; full port.
h. Seals: PTFE or EPDM-rubber O-rings.
i. Handle: Tee shaped.

2.7 CPVC BALL CHECK VALVES

A. CPVC Ball Check Valves:

1. Manufacturers: Subject to compliance with requirements, provide products by one of the following:

   a. Georg Fischer Inc.
   b. IPEX USA LLC.
   c. Spears Manufacturing Company.

2. Description:

   a. Standard: MSS SP-122.
   b. Pressure Rating and Temperature: 125 psig or 150 psig.
   c. Body Material: CPVC.
   d. Body Design: Union or Non-Union ball check.
   e. End Connections for Valves NPS 2 and Smaller: Detachable, socket or threaded.
   f. End Connections for Valves NPS 2-1/2 to NPS 4: Detachable, socket, threaded or flanged.
   g. Ball: CPVC.
   h. Seals: EPDM or FKM-rubber O-rings.

PART 3 - EXECUTION

3.1 EXAMINATION

A. Examine valve interior for cleanliness, freedom from foreign matter, and corrosion. Remove special packing materials, such as blocks, used to prevent disc movement during shipping and handling.

B. Operate valves in positions from fully open to fully closed. Examine guides and seats made accessible by such operations.

C. Examine threads on valve and mating pipe for form and cleanliness.

D. Examine mating flange faces for conditions that might cause leakage. Check bolting for proper size, length, and material. Verify that gasket is of proper size, that its material composition is suitable for service, and that it is free from defects and damage.

E. Do not attempt to repair defective valves; replace with new valves.

3.2 VALVE INSTALLATION

A. Install valves with unions or flanges at each piece of equipment arranged to allow service, maintenance, and equipment removal without system shutdown.

B. Locate valves for easy access and provide separate support where necessary.

C. Install valves in horizontal piping with stem at or above center of pipe.

D. Install valves in position to allow full stem movement.

E. Install valve tags. Comply with requirements in Section 220553 "Identification for Plumbing Piping and Equipment" for valve tags and schedules.

F. Check Valves: Install check valves for proper direction of flow.

1. Swing Check Valves: In horizontal position with hinge pin level.
2. Center-Guided and Plate-Type Check Valves: In horizontal or vertical position, between flanges.
3. Lift Check Valves: With stem upright and plumb.

G. Install chainwheels on operators for gate valves NPS 4 and larger and more than 96 inches above floor. Extend chains to 60 inches above finished floor.

3.3 ADJUSTING

A. Adjust or replace valve packing after piping systems have been tested and put into service but before final adjusting and balancing. Replace valves if persistent leaking occurs.

3.4 GENERAL REQUIREMENTS FOR VALVE APPLICATIONS

A. If ball valves with specified CWP ratings are unavailable, the same types of valves with higher CWP ratings may be substituted.

B. Select valves with the following end connections:

1. For Copper Tubing, NPS 2 and Smaller: Threaded ends except where solder-joint valve-end option or press-end option is indicated in valve schedules below.
2. For Copper Tubing, NPS 2-1/2 to NPS 4: Flanged ends except where threaded valve-end option is indicated in valve schedules below.
3. For Copper Tubing, NPS 5 and Larger: Flanged ends.
4. For Grooved-End Copper Tubing and Steel Piping: Grooved.

C. If check valve applications are not indicated, use the following:

1. Pump-Discharge Check Valves:

a. NPS 2 and Smaller: Bronze swing check valves with bronze or nonmetallic disc.
b. NPS 2-1/2 and Larger for Domestic Water: Iron swing check valves with lever and weight or spring; or iron, center-guided, metal-seat or resilient-seat check valves.
c. NPS 2-1/2 and Larger for Sanitary Waste and Storm Drainage: Iron swing check valves with lever and weight or spring.

D. Use gate valves for shutoff service only.

3.5 DOMESTIC HOT- AND COLD-WATER VALVE SCHEDULE

A. Pipe NPS 2 and Smaller:

1. Brass ball valve, one piece. Provide with threaded or solder-joint ends.
2. Bronze ball valve, one piece with bronze or stainless-steel trim. Provide with threaded or solder-joint ends.
3. Brass ball valves, two-piece with full-port and brass or stainless-steel trim. Provide with threaded or solder-joint ends.
4. Bronze ball valves, two-piece with full-port and bronze, brass or stainless-steel trim. Provide with threaded or solder-joint ends.
5. Brass ball valves, three-piece with full port and brass or stainless-steel trim.
6. Bronze ball valves, three-piece with full port and bronze, brass or stainless-steel trim.
7. Bronze ball valves, two-piece with regular port and bronze or stainless-steel trim.
8. Bronze swing check valves with bronze disc, Class 125 or Class 150, with soldered or threaded end connections.
9. Bronze gate valves, NRS, RS, Class 125 or Class 150 with soldered or threaded ends.

B. Pipe NPS 2-1/2 and Larger:

1. Steel and Iron Valves, NPS 2-1/2 to NPS 4: May be provided with threaded ends instead of flanged ends.
2. Steel ball valves, Class 150 with full-port.
3. Iron ball valves, Class 150.
4. Iron swing check valves with metal seats, Class 125 or Class 250, with threaded or flanged end connections.
5. Iron swing check valves with closure control lever and spring or weight, Class 125, with threaded or flanged end connections.
6. Iron, grooved-end swing check valves, 300 CWP.
7. Iron, center-guided check valves with compact wafer, Class 125, Class 150, Class 250 or Class 300.
8. Iron, center-guided check valves with globe, metal, resilient seat, Class 125, Class 150, Class 250 or Class 300, with threaded or flanged end connections.
9. Iron, dual-plate check valves with metal, resilient seat, Class 125, Class 150, Class 250 or Class 300, with threaded or flanged end connections.
10. Iron, single-plate check valves with resilient seat, Class 125 or Class 250, with threaded or flanged end connections.
11. Iron gate valves, NRS, OS&Y, Class 125 or Class 250 with flanged ends.
12. Iron, Single-Flange Butterfly Valves: 200 CWP, EPDM or NBR seat, aluminum-bronze, ductile-iron or stainless-steel disc.

13. Ductile-Iron, Grooved-End Butterfly Valves: 175 or 300 CWP.

END OF SECTION 220523

SECTION 220529 - HANGERS AND SUPPORTS FOR PLUMBING PIPING AND EQUIPMENT

PART 1 - GENERAL

1.1 RELATED DOCUMENTS

A. Drawings and general provisions of the Contract, including General and Supplementary Conditions and Division 01 Specification Sections, apply to this Section.

1.2 SUMMARY

A. Section Includes:

1. Metal pipe hangers and supports.
2. Trapeze pipe hangers.
3. Metal framing systems.
4. Thermal hanger-shield inserts.
5. Fastener systems.
6. Pipe stands.
7. Pipe-positioning systems.
8. Equipment supports.

B. Related Requirements:

1. Section 055000 "Metal Fabrications" for structural-steel shapes and plates for trapeze hangers for pipe and equipment supports.
2. Section 220548 "Vibration and Seismic Controls for Plumbing Piping and Equipment"

1.3 ACTION SUBMITTALS

A. Submittals shall be formatted per Section 220000 “General Plumbing Requirements”. The manufacturer shall resubmit the specification section showing compliance with each respective paragraphs and specified items and features in that particular specification section. All **exceptions** shall be clearly identified by referencing respective paragraph and other requirements. Next to each specification item, indicate the following:

1. “No Exception Taken”.
2. “Exception”. All exceptions shall be clearly identified by referencing respective paragraph and other requirements along with proposed alternative.

B. Product Data: For each type of product indicated including component cut-sheets and pre-approved details.

1. Product Data: For recycled content, indicating postconsumer and preconsumer recycled content and cost.

2. Environmental Product Declaration: For each product.
3. Health Product Declaration: For each product.
4. Sourcing of Raw Materials: Corporate sustainability report for each manufacturer.

C. Shop Drawings: Signed and sealed by a qualified professional engineer. Show fabrication and installation details and include calculations for the following:

1. Trapeze pipe hangers.
2. Metal framing systems.
3. Pipe stands.
4. Equipment supports.

D. Delegated-Design Submittal: For trapeze hangers indicated to comply with performance requirements and design criteria, including analysis data signed and sealed by the qualified professional engineer responsible for their preparation.

1. Detail fabrication and assembly of trapeze hangers.
2. Include design calculations for designing trapeze hangers.

1.4 INFORMATIONAL SUBMITTALS

A. Welding certificates.

1.5 QUALITY ASSURANCE

A. Structural-Steel Welding Qualifications: Qualify procedures and personnel according to AWS D1.1/D1.1M.

B. Pipe Welding Qualifications: Qualify procedures and operators according to 2015 ASME Boiler and Pressure Vessel Code, Section IX.

PART 2 - PRODUCTS

2.1 PERFORMANCE REQUIREMENTS

A. Delegated Design: Engage a qualified professional engineer, as defined in Section 014000 "Quality Requirements," to design trapeze pipe hangers and equipment supports.

B. Structural Performance: Hangers and supports for plumbing piping and equipment shall withstand the effects of gravity loads and stresses within limits and under conditions indicated according to ASCE/SEI 7.

1. Design supports for multiple pipes, including pipe stands, capable of supporting combined weight of supported systems, system contents, and test water.
2. Design equipment supports capable of supporting combined operating weight of supported equipment and connected systems and components.

3. Design seismic-restraint hangers and supports for piping and equipment and obtain approval from authorities having jurisdiction.

2.2 METAL PIPE HANGERS AND SUPPORTS

A. Carbon-Steel Pipe Hangers and Supports:

1. Description: MSS SP-58, Types 1 through 58, factory-fabricated components.
2. Galvanized Metallic Coatings: Pregalvanized, hot-dip galvanized, or electro-galvanized.
3. Nonmetallic Coatings: Plastic coated or epoxy powder coated.
4. Padded Hangers: Hanger with fiberglass or other pipe insulation pad or cushion to support bearing surface of piping.
5. Hanger Rods: Continuous-thread rod, nuts, and washer made of carbon steel stainless steel.

B. Stainless-Steel Pipe Hangers and Supports:

1. Description: MSS SP-58, Types 1 through 58, factory-fabricated components.
2. Padded Hangers: Hanger with fiberglass or other pipe insulation pad or cushion to support bearing surface of piping.
3. Hanger Rods: Continuous-thread rod, nuts, and washer made of stainless steel.

C. Copper Pipe and Tube Hangers:

1. Description: MSS SP-58, Types 1 through 58, copper-coated-steel, factory-fabricated components.
2. Hanger Rods: Continuous-thread rod, nuts, and washer made of copper-coated steel stainless steel.

2.3 TRAPEZE PIPE HANGERS

A. Description: MSS SP-58, Type 59, shop- or field-fabricated pipe-support assembly, made from structural-carbon-steel shapes, with MSS SP-58 carbon-steel hanger rods, nuts, saddles, and U-bolts.

2.4 METAL FRAMING SYSTEMS

A. MFMA Manufacturer Metal Framing Systems:

1. Manufacturers: Subject to compliance with requirements, provide products by one of the following:

   a. B-line, an Eaton business.
   b. Flex-Strut Inc.
   c. Unistrut; Part of Atkore International.

2. Description: Shop- or field-fabricated pipe-support assembly, made of steel channels, accessories, fittings, and other components for supporting multiple parallel pipes.

3. Standard: Comply with MFMA-4, factory-fabricated components for field assembly.
4. Channels: Continuous slotted carbon-steel stainless-steel, Type 304 stainless-steel, Type 316 extruded-aluminum Insert material channel with inturned lips.
5. Channel Width: Selected for applicable load criteria.
6. Channel Nuts: Formed or stamped nuts or other devices designed to fit into channel slot and, when tightened, prevent slipping along channel.
7. Hanger Rods: Continuous-thread rod, nuts, and washer made of carbon steel stainless steel.
8. Metallic Coating: No coating Plain Pregalvanized G90 Electroplated zinc Hot-dip galvanized Gold (yellow zinc dichromate) galvanized.
9. Paint Coating: Green epoxy, acrylic, or urethane.
10. Plastic Coating: PVC.
11. Combination Coating: .

B. Non-MFMA Manufacturer Metal Framing Systems:

1. Manufacturers: Subject to compliance with requirements, provide products by one of the following:

   a. Anvil International.
   b. PHD Manufacturing, Inc.
   c. Sioux Chief Manufacturing Company, Inc.

2. Description: Shop- or field-fabricated pipe-support assembly, made of steel channels, accessories, fittings, and other components for supporting multiple parallel pipes.
3. Standard: Comply with MFMA-4, factory-fabricated components for field assembly.
4. Channels: Continuous slotted carbon-steel stainless-steel channel with inturned lips.
5. Channel Width: Select for applicable load criteria.
6. Channel Nuts: Formed or stamped nuts or other devices designed to fit into channel slot and, when tightened, prevent slipping along channel.
7. Hanger Rods: Continuous-thread rod, nuts, and washer made of carbon steel stainless steel.
8. Metallic Coating: No coating Plain Pregalvanized G90 Hot-dip galvanized
9. Paint Coating: Green epoxy, acrylic, or urethane.
10. Plastic Coating: PVC.

2.5 THERMAL HANGER-SHIELD INSERTS

A. Manufacturers: Subject to compliance with requirements, provide products by one of the following:

1. National Pipe Hanger Corporation.
2. Pipe Shields Inc.
3. Piping Technology & Products, Inc.

B. Insulation-Insert Material for Cold Piping: ASTM C552, Type II cellular glass with 100-psig minimum compressive strength and vapor barrier.

C. Insulation-Insert Material for Hot Piping: Water-repellent-treated, ASTM C533, Type I calcium silicate with 100-psig ASTM C552, Type II cellular glass with 100-psig minimum compressive strength.

D. For Trapeze or Clamped Systems: Insert and shield shall cover entire circumference of pipe.

E. For Clevis or Band Hangers: Insert and shield shall cover lower 180 degrees of pipe.

F. Insert Length: Extend 2 inches beyond sheet metal shield for piping operating below ambient air temperature.

2.6 FASTENER SYSTEMS

A. Powder-Actuated Fasteners: Threaded-steel stud, for use in hardened portland cement concrete, with pull-out, tension, and shear capacities appropriate for supported loads and building materials where used.

1. Manufacturers: Subject to compliance with requirements, available manufacturers offering products that may be incorporated into the Work include, but are not limited to the following:

a. Hilti, Inc.
b. ITW Ramset/Red Head; Illinois Tool Works, Inc.
c. Simpson Strong-Tie Co., Inc.

B. Mechanical-Expansion Anchors: Insert-wedge-type anchors, for use in hardened portland cement concrete, with pull-out, tension, and shear capacities appropriate for supported loads and building materials where used.

1. Manufacturers: Subject to compliance with requirements, provide products by one of the following:

a. B-line, an Eaton business.
b. Hilti, Inc.
c. ITW Ramset/Red Head; Illinois Tool Works, Inc.

2. Indoor Applications: Zinc-coated or stainless steel.
3. Outdoor Applications: Stainless steel.

2.7 PIPE STANDS

A. General Requirements for Pipe Stands: Shop- or field-fabricated assemblies made of manufactured corrosion-resistant components to support roof-mounted piping.

B. Compact Pipe Stand:

1. Description: Single base unit with integral-rod roller, pipe clamps, or V-shaped cradle to support pipe, for roof installation without membrane penetration.
2. Base: Single, vulcanized rubber, molded polypropylene, or polycarbonate.
3. Hardware: Galvanized steel or polycarbonate.
4. Accessories: Protection pads.

C. Low-Profile, Single-Base, Single-Pipe Stand:

1. Description: Single base with vertical and horizontal members, and pipe support, for roof installation without membrane protection.
2. Base: Single, vulcanized rubber, molded polypropylene, or polycarbonate.
3. Vertical Members: Two galvanized stainless-steel, continuous-thread, 1/2-inch rods.
4. Horizontal Member: Adjustable horizontal, galvanized stainless-steel pipe support channels.
5. Pipe Supports: Roller Strut clamps Clevis hanger Swivel hanger.
6. Hardware: Galvanized Stainless steel.
7. Accessories: Protection pads.
8. Height: 12 inches above roof.

D. High-Profile, Single-Base, Single-Pipe Stand:

1. Description: Single base, vertical and horizontal members, and pipe support, for roof installation without membrane penetration.
2. Base: Single vulcanized rubber or molded polypropylene.
3. Vertical Members: Two galvanized stainless-steel, continuous-thread, 1/2-inch rods.
4. Horizontal Member: One adjustable-height, galvanized- or stainless-steel, pipe-support slotted channel or plate.
5. Pipe Supports: Roller Clevis hanger Swivel hanger.
6. Hardware: Galvanized Stainless steel.
7. Accessories: Protection pads, 1/2-inch, continuous-thread, galvanized-steel rod, 1/2-inch, continuous-thread, stainless-steel rod.
8. Height: 36 inches above roof.

E. High-Profile, Multiple-Pipe Stand:

1. Description: Assembly of bases, vertical and horizontal members, and pipe supports, for roof installation without membrane penetration.
2. Bases: Two or more; vulcanized rubber molded polypropylene.
3. Vertical Members: Two or more, galvanized stainless-steel channels.
4. Horizontal Members: One or more, adjustable-height, galvanized stainless-steel pipe support.
5. Pipe Supports: Roller Strut clamps Clevis hanger Swivel hanger.
6. Hardware: Galvanized Stainless steel.
7. Accessories: Protection pads, 1/2-inch, continuous-thread rod.
8. Height: 36 inches above roof.

F. Curb-Mounted-Type Pipe Stands: Shop- or field-fabricated pipe supports made from structural-steel shapes, continuous-thread rods, and rollers, for mounting on permanent stationary roof curb.

2.8 PIPE-POSITIONING SYSTEMS

A. Description: IAPMO PS 42 positioning system composed of metal brackets, clips, and straps for positioning piping in pipe spaces; for plumbing fixtures in commercial applications.

2.9 EQUIPMENT SUPPORTS

A. Description: Welded, shop- or field-fabricated equipment support made from structural-carbon-steel shapes.

2.10 MATERIALS

A. Aluminum: ASTM B221.

B. Carbon Steel: ASTM A1011/A1011M.

C. Structural Steel: ASTM A36/A36M carbon-steel plates, shapes, and bars; black and galvanized.

D. Stainless Steel: ASTM A240/A240M.

E. Grout: ASTM C1107/C1107M, factory-mixed and -packaged, dry, hydraulic-cement, non-shrink and nonmetallic grout; suitable for interior and exterior applications.

1. Properties: Non-staining, noncorrosive, and nongaseous.
2. Design Mix: 5000-psi, 28-day compressive strength.

PART 3 - EXECUTION

3.1 APPLICATION

A. Comply with requirements in Section 078413 "Penetration Firestopping" for firestopping materials and installation, for penetrations through fire-rated walls, ceilings, and assemblies.

B. Strength of Support Assemblies: Where not indicated, select sizes of components, so strength will be adequate to carry present and future static loads within specified loading limits. Minimum static design load used for strength determination shall be weight of supported components plus 200 lb.

3.2 HANGER AND SUPPORT INSTALLATION

A. Metal Pipe-Hanger Installation: Comply with MSS SP-58. Install hangers, supports, clamps, and attachments as required to properly support piping from building structure.

B. Metal Trapeze Pipe-Hanger Installation: Comply with MSS SP-58. Arrange for grouping of parallel runs of horizontal piping, and support together on field-fabricated trapeze pipe hangers.

1. Pipes of Various Sizes: Support together and space trapezes for smallest pipe size, or install intermediate supports for smaller-diameter pipes as specified for individual pipe hangers.
2. Field fabricate from ASTM A36/A36M carbon-steel shapes selected for loads being supported. Weld steel according to AWS D1.1/D1.1M.

C. Fiberglass Pipe-Hanger Installation: Comply with applicable portions of MSS SP-58. Install hangers and attachments as required to properly support piping from building structure.

D. Metal Framing System Installation: Arrange for grouping of parallel runs of piping, and support together on field-assembled metal framing systems.

E. Thermal Hanger-Shield Installation: Install in pipe hanger or shield for insulated piping.

F. Fastener System Installation:

1. Install powder-actuated fasteners for use in lightweight concrete or concrete slabs less than 4 inches thick in concrete, after concrete is placed and completely cured. Use operators that are licensed by powder-actuated tool manufacturer. Install fasteners according to powder-actuated tool manufacturer's operating manual.
2. Install mechanical-expansion anchors in concrete, after concrete is placed and completely cured. Install fasteners according to manufacturer's written instructions.

G. Pipe Stand Installation:

1. Pipe Stand Types, except Curb-Mounted Type: Assemble components and mount on smooth roof surface. Do not penetrate roof membrane.
2. Curb-Mounted-Type Pipe Stands: Assemble components or fabricate pipe stand and mount on permanent, stationary roof curb. See Section 077200 "Roof Accessories" for curbs.

H. Pipe-Positioning-System Installation: Install support devices to make rigid supply and waste piping connections to each plumbing fixture.

I. Install hangers and supports complete with necessary attachments, inserts, bolts, rods, nuts, washers, and other accessories.

J. Equipment Support Installation: Fabricate from welded-structural-steel shapes.

K. Install hangers and supports to allow controlled thermal and seismic movement of piping systems, to permit freedom of movement between pipe anchors, and to facilitate action of expansion joints, expansion loops, expansion bends, and similar units.

L. Install lateral bracing with pipe hangers and supports to prevent swaying.

M. Install building attachments within concrete slabs or attach to structural steel. Install additional attachments at concentrated loads, including valves, flanges, and strainers, NPS 2-1/2 and larger and at changes in direction of piping. Install concrete inserts before concrete is placed; fasten inserts to forms and install reinforcing bars through openings at top of inserts.

N. Load Distribution: Install hangers and supports, so that piping live and dead loads and stresses from movement will not be transmitted to connected equipment.

O. Pipe Slopes: Install hangers and supports to provide indicated pipe slopes and to not exceed maximum pipe deflections allowed by ASME B31.9 for building services piping.

P. Insulated Piping:

1. Attach clamps and spacers to piping.

    a. Piping Operating Above Ambient Air Temperature: Clamp may project through insulation.
    b. Piping Operating Below Ambient Air Temperature: Use thermal hanger-shield insert with clamp sized to match OD of insert.
    c. Do not exceed pipe stress limits allowed by ASME B31.9 for building services piping.

2. Install MSS SP-58, Type 39 protection saddles if insulation without vapor barrier is indicated. Fill interior voids with insulation that matches adjoining insulation.

    a. Option: Thermal hanger-shield inserts may be used. Include steel weight-distribution plate for pipe NPS 4 and larger if pipe is installed on rollers.

3. Install MSS SP-58, Type 40 protective shields on cold piping with vapor barrier. Shields shall span an arc of 180 degrees.

    a. Option: Thermal hanger-shield inserts may be used. Include steel weight-distribution plate for pipe NPS 4 and larger if pipe is installed on rollers.

4. Shield Dimensions for Pipe: Not less than the following:

    a. NPS 1/4 to NPS 3-1/2: 12 inches long and 0.048 inch thick.
    b. NPS 4: 12 inches long and 0.06 inch thick.
    c. NPS 5 and NPS 6: 18 inches long and 0.06 inch thick.
    d. NPS 8 to NPS 14: 24 inches long and 0.075 inch thick.
    e. NPS 16 to NPS 24: 24 inches long and 0.105 inch thick.

5. Pipes NPS 8 and Larger: Include wood or reinforced calcium-silicate-insulation inserts of length at least as long as protective shield.
6. Thermal Hanger Shields: Install with insulation of same thickness as piping insulation.

3.3 EQUIPMENT SUPPORTS

A. Fabricate structural-steel stands to suspend equipment from structure overhead or to support equipment above floor.

B. Grouting: Place grout under supports for equipment and make bearing surface smooth.

C. Provide lateral bracing, to prevent swaying, for equipment supports.

3.4 METAL FABRICATIONS

A. Cut, drill, and fit miscellaneous metal fabrications for trapeze pipe hangers and equipment supports.

B. Fit exposed connections together to form hairline joints. Field weld connections that cannot be shop welded because of shipping size limitations.

C. Field Welding: Comply with AWS D1.1/D1.1M procedures for shielded, metal arc welding; appearance and quality of welds; and methods used in correcting welding work; and with the following:

1. Use materials and methods that minimize distortion and develop strength and corrosion resistance of base metals.
2. Obtain fusion without undercut or overlap.
3. Remove welding flux immediately.
4. Finish welds at exposed connections, so no roughness shows after finishing and so contours of welded surfaces match adjacent contours.

3.5 ADJUSTING

A. Hanger Adjustments: Adjust hangers to distribute loads equally on attachments and to achieve indicated slope of pipe.

B. Trim excess length of continuous-thread hanger and support rods to 1-1/2 inches.

3.6 PAINTING

A. Touchup: Clean field welds and abraded, shop-painted areas. Paint exposed areas immediately after erecting hangers and supports. Use same materials as those used for shop painting. Comply with SSPC-PA 1 requirements for touching up field-painted surfaces.

1. Apply paint by brush or spray to provide a minimum dry film thickness of 2.0 mils.

B. Touchup: Cleaning and touchup painting of field welds, bolted connections, and abraded, shop-painted areas on miscellaneous metal are specified in Section 099113 "Exterior Painting." Section 099123 "Interior Painting." Section 099600 "High-Performance Coatings."

C. Galvanized Surfaces: Clean welds, bolted connections, and abraded areas, and apply galvanizing-repair paint to comply with ASTM A780/A780M.

3.7 HANGER AND SUPPORT SCHEDULE

A. Specific hanger and support requirements are in Sections specifying piping systems and equipment.

B. Comply with MSS SP-58 for pipe-hanger selections and applications that are not specified in piping system Sections.

C. Use hangers and supports with galvanized metallic coatings for piping and equipment that will not have field-applied finishes.

D. Use nonmetallic coatings on attachments for electrolytic protection where attachments are in direct contact with copper tubing.

E. Use carbon-steel pipe hangers and supports metal trapeze pipe hangers and metal framing systems and attachments for general service applications.

F. Use stainless-steel pipe hangers and stainless-steel or corrosion-resistant attachments for hostile environment applications.

G. Use copper-plated pipe hangers and copper or stainless-steel attachments for copper piping and tubing.

H. Use padded hangers for piping that is subject to scratching.

I. Use thermal hanger-shield inserts for insulated piping and tubing.

J. Horizontal-Piping Hangers and Supports: Unless otherwise indicated and except as specified in piping system Sections, install the following types:

1. Adjustable, Steel Clevis Hangers (MSS Type 1): For suspension of noninsulated or insulated, stationary pipes NPS 1/2 to NPS 30.
2. Yoke-Type Pipe Clamps (MSS Type 2): For suspension of up to 1050 deg F pipes NPS 4 to NPS 24, requiring up to 4 inches of insulation.
3. Carbon- or Alloy-Steel, Double-Bolt Pipe Clamps (MSS Type 3): For suspension of pipes NPS 3/4 to NPS 36, requiring clamp flexibility and up to 4 inches of insulation.
4. Steel Pipe Clamps (MSS Type 4): For suspension of cold and hot pipes NPS 1/2 to NPS 24 if little or no insulation is required.
5. Pipe Hangers (MSS Type 5): For suspension of pipes NPS 1/2 to NPS 4, to allow off-center closure for hanger installation before pipe erection.
6. Adjustable, Swivel Split- or Solid-Ring Hangers (MSS Type 6): For suspension of noninsulated, stationary pipes NPS 3/4 to NPS 8.
7. Adjustable, Steel Band Hangers (MSS Type 7): For suspension of noninsulated, stationary pipes NPS 1/2 to NPS 8.
8. Adjustable Band Hangers (MSS Type 9): For suspension of noninsulated, stationary pipes NPS 1/2 to NPS 8.
9. Adjustable, Swivel-Ring Band Hangers (MSS Type 10): For suspension of noninsulated, stationary pipes NPS 1/2 to NPS 8.
10. Split Pipe Ring with or without Turnbuckle Hangers (MSS Type 11): For suspension of noninsulated, stationary pipes NPS 3/8 to NPS 8.
11. Extension Hinged or Two-Bolt Split Pipe Clamps (MSS Type 12): For suspension of noninsulated, stationary pipes NPS 3/8 to NPS 3.
12. U-Bolts (MSS Type 24): For support of heavy pipes NPS 1/2 to NPS 30.
13. Clips (MSS Type 26): For support of insulated pipes not subject to expansion or contraction.
14. Pipe Saddle Supports (MSS Type 36): For support of pipes NPS 4 to NPS 36, with steel-pipe base stanchion support and cast-iron floor flange or carbon-steel plate.
15. Pipe Stanchion Saddles (MSS Type 37): For support of pipes NPS 4 to NPS 36, with steel-pipe base stanchion support and cast-iron floor flange or carbon-steel plate, and with U-bolt to retain pipe.

16. Adjustable Pipe Saddle Supports (MSS Type 38): For stanchion-type support for pipes NPS 2-1/2 to NPS 36 if vertical adjustment is required, with steel-pipe base stanchion support and cast-iron floor flange.
17. Single-Pipe Rolls (MSS Type 41): For suspension of pipes NPS 1 to NPS 30, from two rods if longitudinal movement caused by expansion and contraction occurs.
18. Adjustable Roller Hangers (MSS Type 43): For suspension of pipes NPS 2-1/2 to NPS 24, from single rod if horizontal movement caused by expansion and contraction occurs.
19. Complete Pipe Rolls (MSS Type 44): For support of pipes NPS 2 to NPS 42 if longitudinal movement caused by expansion and contraction occurs but vertical adjustment is unnecessary.
20. Pipe Roll and Plate Units (MSS Type 45): For support of pipes NPS 2 to NPS 24 if small horizontal movement caused by expansion and contraction occurs and vertical adjustment is unnecessary.
21. Adjustable Pipe Roll and Base Units (MSS Type 46): For support of pipes NPS 2 to NPS 30 if vertical and lateral adjustment during installation, in addition to expansion and contraction, is required.

K. Vertical-Piping Clamps: Unless otherwise indicated and except as specified in piping system Sections, install the following types:

1. Extension Pipe or Riser Clamps (MSS Type 8): For support of pipe risers NPS 3/4 to NPS 24.
2. Carbon- or Alloy-Steel Riser Clamps (MSS Type 42): For support of pipe risers NPS 3/4 to NPS 24 if longer ends are required for riser clamps.

L. Hanger-Rod Attachments: Unless otherwise indicated and except as specified in piping system Sections, install the following types:

1. Steel Turnbuckles (MSS Type 13): For adjustment of up to 6 inches for heavy loads.
2. Steel Clevises (MSS Type 14): For 120 to 450 deg F piping installations.
3. Swivel Turnbuckles (MSS Type 15): For use with MSS Type 11 split pipe rings.
4. Malleable-Iron Sockets (MSS Type 16): For attaching hanger rods to various types of building attachments.
5. Steel Weldless Eye Nuts (MSS Type 17): For 120 to 450 deg F piping installations.

M. Building Attachments: Unless otherwise indicated and except as specified in piping system Sections, install the following types:

1. Steel or Malleable-Concrete Inserts (MSS Type 18): For upper attachment to suspend pipe hangers from concrete ceiling.
2. Top-Beam C-Clamps (MSS Type 19): For use under roof installations with bar-joist construction, to attach to top flange of structural shape.
3. Side-Beam or Channel Clamps (MSS Type 20): For attaching to bottom flange of beams, channels, or angles.
4. Center-Beam Clamps (MSS Type 21): For attaching to center of bottom flange of beams.
5. Welded Beam Attachments (MSS Type 22): For attaching to bottom of beams if loads are considerable and rod sizes are large.
6. C-Clamps (MSS Type 23): For structural shapes.
7. Top-Beam Clamps (MSS Type 25): For top of beams if hanger rod is required tangent to flange edge.

8. Side-Beam Clamps (MSS Type 27): For bottom of steel I-beams.
9. Steel-Beam Clamps with Eye Nuts (MSS Type 28): For attaching to bottom of steel I-beams for heavy loads.
10. Linked-Steel Clamps with Eye Nuts (MSS Type 29): For attaching to bottom of steel I-beams for heavy loads, with link extensions.
11. Malleable-Beam Clamps with Extension Pieces (MSS Type 30): For attaching to structural steel.
12. Welded-Steel Brackets: For support of pipes from below or for suspending from above by using clip and rod. Use one of the following for indicated loads:

    a. Light (MSS Type 31): 750 lb.
    b. Medium (MSS Type 32): 1500 lb.
    c. Heavy (MSS Type 33): 3000 lb.

13. Side-Beam Brackets (MSS Type 34): For sides of steel or wooden beams.
14. Plate Lugs (MSS Type 57): For attaching to steel beams if flexibility at beam is required.
15. Horizontal Travelers (MSS Type 58): For supporting piping systems subject to linear horizontal movement where headroom is limited.

N. Saddles and Shields: Unless otherwise indicated and except as specified in piping system Sections, install the following types:

1. Steel-Pipe-Covering Protection Saddles (MSS Type 39): To fill interior voids with insulation that matches adjoining insulation.
2. Protection Shields (MSS Type 40): Of length recommended in writing by manufacturer to prevent crushing insulation.
3. Thermal Hanger-Shield Inserts: For supporting insulated pipe.

O. Spring Hangers and Supports: Unless otherwise indicated and except as specified in piping system Sections, install the following types:

1. Restraint-Control Devices (MSS Type 47): Where indicated to control piping movement.
2. Spring Cushions (MSS Type 48): For light loads if vertical movement does not exceed 1-1/4 inches.
3. Spring-Cushion Roll Hangers (MSS Type 49): For equipping Type 41 roll hanger with springs.
4. Spring Sway Braces (MSS Type 50): To retard sway, shock, vibration, or thermal expansion in piping systems.
5. Variable-Spring Hangers (MSS Type 51): Preset to indicated load, and limit variability factor to 25 percent to allow expansion and contraction of piping system from hanger.
6. Variable-Spring Base Supports (MSS Type 52): Preset to indicated load, and limit variability factor to 25 percent to allow expansion and contraction of piping system from base support.
7. Variable-Spring Trapeze Hangers (MSS Type 53): Preset to indicated load, and limit variability factor to 25 percent to allow expansion and contraction of piping system from trapeze support.
8. Constant Supports: For critical piping stress and if necessary, to avoid transfer of stress from one support to another support, critical terminal, or connected equipment. Include auxiliary stops for erection, hydrostatic test, and load-adjustment capability. These supports include the following types:

a. Horizontal (MSS Type 54): Mounted horizontally.
b. Vertical (MSS Type 55): Mounted vertically.
c. Trapeze (MSS Type 56): Two vertical-type supports and one trapeze member.

P. Comply with MSS SP-58 for trapeze pipe-hanger selections and applications that are not specified in piping system Sections.

Q. Comply with MFMA-103 for metal framing system selections and applications that are not specified in piping system Sections.

R. Use powder-actuated fasteners or mechanical-expansion anchors instead of building attachments where required in concrete construction.

S. Use pipe-positioning systems in pipe spaces behind plumbing fixtures to support supply and waste piping for plumbing fixtures.

END OF SECTION 220529

SECTION 220548 - VIBRATION AND SEISMIC CONTROLS FOR PLUMBING PIPING AND EQUIPMENT

PART 1 - GENERAL

1.1 RELATED DOCUMENTS

A. Drawings and general provisions of the Contract, including General and Supplementary Conditions and Division 01 Specification Sections, apply to this Section.

1.2 SUMMARY

A. Section Includes:

1. Elastomeric isolation pads.
2. Elastomeric isolation mounts.
3. Restrained elastomeric isolation mounts.
4. Open-spring isolators.
5. Housed-spring isolators.
6. Restrained-spring isolators.
7. Housed-restrained-spring isolators.
8. Pipe-riser resilient supports.
9. Resilient pipe guides.
10. Elastomeric hangers.
11. Spring hangers.
12. Snubbers.
13. Restraint channel bracings.
14. Restraint cables.
15. Seismic-restraint accessories.
16. Mechanical anchor bolts.
17. Adhesive anchor bolts.

B. Related Requirements:

1. Section 210548 "Vibration and Seismic Controls for Fire-Suppression Piping and Equipment" for devices for fire-suppression equipment and systems.
2. Section 230548 "Vibration and Seismic Controls for HVAC" for devices for HVAC equipment and systems.

1.3 DEFINITIONS

A. IBC: International Building Code.

B. ICC-ES: ICC-Evaluation Service.

C. OSHPD: Office of Statewide Health Planning & Development (for the State of California).

1.4 ACTION SUBMITTALS

A. Submittals shall be formatted per Section 220000 "General Plumbing Requirements". The manufacturer shall resubmit the specification section showing compliance with each respective paragraphs and specified items and features in that particular specification section. All **exceptions** shall be clearly identified by referencing respective paragraph and other requirements. Next to each specification item, indicate the following:

1. "No Exception Taken".
2. "Exception". All exceptions shall be clearly identified by referencing respective paragraph and other requirements along with proposed alternative.

B. Product Data: For each type of product.

1. Include rated load, rated deflection, and overload capacity for each vibration isolation device.
2. Illustrate and indicate style, material, strength, fastening provision, and finish for each type and size of vibration isolation device and seismic-restraint component required.

    a. Tabulate types and sizes of seismic restraints, complete with report numbers and rated strength in tension and shear as evaluated by an evaluation service member of ICC-ES OSHPD an agency acceptable to authorities having jurisdiction.
    b. Annotate to indicate application of each product submitted and compliance with requirements.

3. Interlocking Snubbers: Include ratings for horizontal, vertical, and combined loads.

C. Shop Drawings:

1. Detail fabrication and assembly of equipment bases. Detail fabrication including anchorages and attachments to structure and to supported equipment.

D. Delegated-Design Submittal: For each vibration isolation and seismic-restraint device.

1. Include design calculations and details for selecting vibration isolators and seismic restraints complying with performance requirements, design criteria, and analysis data signed and sealed by the qualified professional engineer responsible for their preparation.
2. Design Calculations: Calculate static and dynamic loading due to equipment weight and operation, due to seismic forces required to select vibration isolators, and due to seismic restraints.
3. Riser Supports: Include riser diagrams and calculations showing anticipated expansion and contraction at each support point, initial and final loads on building structure, spring deflection changes, and seismic loads. Include certification that riser system was examined for excessive stress and that none exists.
4. Seismic-Restraint Details:

a. Design Analysis: To support selection and arrangement of seismic restraints. Include calculations of combined tensile and shear loads.
b. Details: Indicate fabrication and arrangement. Detail attachments of restraints to the restrained items and to the structure. Show attachment locations, methods, and spacings. Identify components, list their strengths, and indicate directions and values of forces transmitted to the structure during seismic events. Indicate association with vibration isolation devices.
c. Coordinate seismic-restraint and vibration isolation details with wind-restraint details required for equipment mounted outdoors. Comply with requirements in other Sections for equipment mounted outdoors.
d. Preapproval and Evaluation Documentation: By an evaluation service member of ICC-ES OSHPD an agency acceptable to authorities having jurisdiction, showing maximum ratings of restraint items and the basis for approval (tests or calculations).

1.5 INFORMATIONAL SUBMITTALS

A. Coordination Drawings: Show coordination of vibration isolation device installation and seismic bracing for plumbing piping and equipment with other systems and equipment in the vicinity, including other supports and restraints, if any.

B. Qualification Data: For professional engineer and testing agency.

C. Welding certificates.

D. Field quality-control reports.

1.6 QUALITY ASSURANCE

A. Testing Agency Qualifications: An independent agency, with the experience and capability to conduct the testing indicated, that is an NRTL as defined by OSHA in 29 CFR 1910.7 and that is acceptable to authorities having jurisdiction.

B. Comply with seismic-restraint requirements in the IBC unless requirements in this Section are more stringent.

C. Welding Qualifications: Qualify procedures and personnel according to AWS D1.1/D1.1M, "Structural Welding Code - Steel."

D. Seismic-restraint devices shall have horizontal and vertical load testing and analysis and shall bear anchorage preapproval OPA number from OSHPD, preapproval by ICC-ES, or preapproval by another agency acceptable to authorities having jurisdiction, showing maximum seismic-restraint ratings. Ratings based on independent testing are preferred to ratings based on calculations. If preapproved ratings are unavailable, submittals based on independent testing are preferred. Calculations (including combining shear and tensile loads) to support seismic-restraint designs must be signed and sealed by a qualified professional engineer.

PART 2 - PRODUCTS

2.1 PERFORMANCE REQUIREMENTS

A. Seismic-Restraint Loading:

1. Site Class as Defined in the IBC: See Structural Drawings.
2. Assigned Seismic Use Group or Building Category as Defined in the IBC: See Structural Drawings.

    a. Component Importance Factor: 1.0.
    b. Component Response Modification Factor: Refer to ASCE 7-16.
    c. Component Amplification Factor: Refer to ASCE 7-16.

3. Design Spectral Response Acceleration at Short Periods (0.2 Second): See Structural Drawings.
4. Design Spectral Response Acceleration at 1.0-Second Period: See Structural Drawings.
5. Rated strengths, features, and applications shall be as defined in reports by an evaluation service member of ICC-ES OSHPD an agency acceptable to authorities having jurisdiction.

    a. Structural Safety Factor: Allowable strength in tension, shear, and pullout force of components shall be at least four times the maximum seismic forces to which they are subjected.

2.2 ELASTOMERIC ISOLATION PADS

A. Elastomeric Isolation Pads:

1. Manufacturers: Subject to compliance with requirements, provide products by one of the following:

    a. Ace Mountings Co., Inc.
    b. California Dynamics Corporation.
    c. Isolation Technology, Inc.

2. Fabrication: Single or multiple layers of sufficient durometer stiffness for uniform loading over pad area.
3. Size: Factory or field cut to match requirements of supported equipment.
4. Pad Material: Oil and water resistant with elastomeric properties.
5. Surface Pattern: Smooth Ribbed Waffle pattern.
6. Infused nonwoven cotton or synthetic fibers.
7. Load-bearing metal plates adhered to pads.
8. Sandwich-Core Material: Resilient and elastomeric.

    a. Surface Pattern: Smooth Ribbed Waffle pattern.
    b. Infused nonwoven cotton or synthetic fibers.

2.3 ELASTOMERIC ISOLATION MOUNTS

A. Double-Deflection, Elastomeric Isolation Mounts:

1. Manufacturers: Subject to compliance with requirements, provide products by one of the following:

   a. Ace Mountings Co., Inc.
   b. California Dynamics Corporation.
   c. Isolation Technology, Inc.

2. Mounting Plates:

   a. Top Plate: Encapsulated steel load transfer top plates, factory drilled and threaded with threaded studs or bolts.
   b. Baseplate: Encapsulated steel bottom plates with holes provided for anchoring to support structure.

3. Elastomeric Material: Molded, oil-resistant rubber, neoprene, or other elastomeric material.

2.4 RESTRAINED ELASTOMERIC ISOLATION MOUNTS

A. Restrained Elastomeric Isolation Mounts:

1. Manufacturers: Subject to compliance with requirements, provide products by one of the following:

   a. Ace Mountings Co., Inc.
   b. California Dynamics Corporation.
   c. Isolation Technology, Inc.

2. Description: All-directional isolator with seismic restraints containing two separate and opposing elastomeric elements that prevent central threaded element and attachment hardware from contacting the housing during normal operation.

   a. Housing: Cast-ductile iron or welded steel.
   b. Elastomeric Material: Molded, oil-resistant rubber, neoprene, or other elastomeric material.

2.5 OPEN-SPRING ISOLATORS

A. Freestanding, Laterally Stable, Open-Spring Isolators:

1. Manufacturers: Subject to compliance with requirements, provide products by one of the following:

   a. Ace Mountings Co., Inc.
   b. California Dynamics Corporation.
   c. Isolation Technology, Inc.

2. Outside Spring Diameter: Not less than 80 percent of the compressed height of the spring at rated load.
3. Minimum Additional Travel: 50 percent of the required deflection at rated load.
4. Lateral Stiffness: More than 80 percent of rated vertical stiffness.
5. Overload Capacity: Support 200 percent of rated load, fully compressed, without deformation or failure.
6. Baseplates: Factory-drilled steel plate for bolting to structure with an elastomeric isolator pad attached to the underside. Baseplates shall limit floor load to 500 psig.
7. Top Plate and Adjustment Bolt: Threaded top plate with adjustment bolt and cap screw to fasten and level equipment.

2.6 HOUSED-SPRING ISOLATORS

A. Freestanding, Laterally Stable, Open-Spring Isolators in Two-Part Telescoping Housing:

1. Manufacturers: Subject to compliance with requirements, provide products by one of the following:

   a. Ace Mountings Co., Inc.
   b. California Dynamics Corporation.
   c. Isolation Technology, Inc.

2. Outside Spring Diameter: Not less than 80 percent of the compressed height of the spring at rated load.
3. Minimum Additional Travel: 50 percent of the required deflection at rated load.
4. Lateral Stiffness: More than 80 percent of rated vertical stiffness.
5. Overload Capacity: Support 200 percent of rated load, fully compressed, without deformation or failure.
6. Two-Part Telescoping Housing: A steel top and bottom frame separated by an elastomeric material and enclosing the spring isolators.

   a. Drilled base housing for bolting to structure with an elastomeric isolator pad attached to the underside. Bases shall limit floor load to 500 psig.
   b. Top housing with attachment and leveling bolt threaded mounting holes and internal leveling device elastomeric pad.

2.7 RESTRAINED-SPRING ISOLATORS

A. Freestanding, Laterally Stable, Open-Spring Isolators with Vertical-Limit Stop Restraint:

1. Manufacturers: Subject to compliance with requirements, provide products by one of the following:

   a. Ace Mountings Co., Inc.
   b. California Dynamics Corporation.
   c. Isolation Technology, Inc.

2. Housing: Steel housing with vertical-limit stops to prevent spring extension due to weight being removed.

    a. Base with holes for bolting to structure with an elastomeric isolator pad attached to the underside. Bases shall limit floor load to 500 psig.
    b. Top plate with threaded mounting holes elastomeric pad.
    c. Internal leveling bolt that acts as blocking during installation.

3. Restraint: Limit stop as required for equipment and authorities having jurisdiction.
4. Outside Spring Diameter: Not less than 80 percent of the compressed height of the spring at rated load.
5. Minimum Additional Travel: 50 percent of the required deflection at rated load.
6. Lateral Stiffness: More than 80 percent of rated vertical stiffness.
7. Overload Capacity: Support 200 percent of rated load, fully compressed, without deformation or failure.

2.8 HOUSED-RESTRAINED-SPRING ISOLATORS

A. Freestanding, Steel, Open-Spring Isolators with Vertical-Limit Stop Restraint in Two-Part Telescoping Housing:

1. Manufacturers: Subject to compliance with requirements, provide products by one of the following:

    a. Ace Mountings Co., Inc.
    b. California Dynamics Corporation.
    c. Isolation Technology, Inc.

2. Two-Part Telescoping Housing: A steel top and bottom frame separated by an elastomeric material and enclosing the spring isolators. Housings are equipped with adjustable non-adjustable snubbers to limit vertical movement.

    a. Drilled base housing for bolting to structure with an elastomeric isolator pad attached to the underside. Bases shall limit floor load to 500 psig.
    b. Threaded top housing with adjustment bolt and cap screw to fasten and level equipment.

3. Outside Spring Diameter: Not less than 80 percent of the compressed height of the spring at rated load.
4. Minimum Additional Travel: 50 percent of the required deflection at rated load.
5. Lateral Stiffness: More than 80 percent of rated vertical stiffness.
6. Overload Capacity: Support 200 percent of rated load, fully compressed, without deformation or failure.

2.9 PIPE-RISER RESILIENT SUPPORT

A. Description: All-directional, acoustical pipe anchor consisting of two steel tubes separated by a minimum 1/2-inch-thick neoprene.

1. Vertical-Limit Stops: Steel and neoprene vertical-limit stops arranged to prevent vertical travel in both directions.
2. Maximum Load Per Support: 500 psig on isolation material providing equal isolation in all directions.

2.10 RESILIENT PIPE GUIDES

A. Description: Telescopic arrangement of two steel tubes or post and sleeve arrangement separated by a minimum 1/2-inch-thick neoprene.

1. Factory-Set Height Guide with Shear Pin: Shear pin shall be removable and reinsertable to allow for selection of pipe movement. Guides shall be capable of motion to meet location requirements.

2.11 ELASTOMERIC HANGERS

A. Elastomeric Mount in a Steel Frame with Upper and Lower Steel Hanger Rods:

1. Manufacturers: Subject to compliance with requirements, provide products by one of the following:

   a. Ace Mountings Co., Inc.
   b. California Dynamics Corporation.
   c. Isolation Technology, Inc.

2. Frame: Steel, fabricated with a connection for an upper threaded hanger rod and an opening on the underside to allow for a maximum of 30 degrees of angular lower hanger-rod misalignment without binding or reducing isolation efficiency.

3. Dampening Element: Molded, oil-resistant rubber, neoprene, or other elastomeric material with a projecting bushing for the underside opening preventing steel to steel contact.

2.12 SPRING HANGERS

A. Combination Coil-Spring and Elastomeric-Insert Hanger with Spring and Insert in Compression:

1. Manufacturers: Subject to compliance with requirements, provide products by one of the following:

   a. Ace Mountings Co., Inc.
   b. California Dynamics Corporation.
   c. Kinetics Noise Control, Inc.

2. Frame: Steel, fabricated for connection to threaded hanger rods and to allow for a maximum of 30 degrees of angular hanger-rod misalignment without binding or reducing isolation efficiency.

3. Outside Spring Diameter: Not less than 80 percent of the compressed height of the spring at rated load.
4. Minimum Additional Travel: 50 percent of the required deflection at rated load.
5. Lateral Stiffness: More than 80 percent of rated vertical stiffness.
6. Overload Capacity: Support 200 percent of rated load, fully compressed, without deformation or failure.
7. Elastomeric Element: Molded, oil-resistant rubber or neoprene. Steel-washer-reinforced cup to support spring and bushing projecting through bottom of frame.
8. Adjustable Vertical Stop: Steel washer with neoprene washer "up-stop" on lower threaded rod.
9. Self-centering hanger-rod cap to ensure concentricity between hanger rod and support spring coil.

2.13 SNUBBERS

A. Manufacturers: Subject to compliance with requirements, provide products by one of the following:

1. Kinetics Noise Control, Inc.
2. Mason Industries, Inc.
3. Novia; A Division of C&P.

B. Description: Factory fabricated using welded structural-steel shapes and plates, anchor bolts, and replaceable resilient isolation washers and bushings.

1. Anchor bolts for attaching to concrete shall be seismic-rated, drill-in, and stud-wedge or female-wedge type.
2. Resilient Isolation Washers and Bushings: Oil- and water-resistant neoprene.
3. Maximum 1/4-inch air gap, and minimum 1/4-inch-thick resilient cushion.

2.14 RESTRAINT CHANNEL BRACINGS

A. Manufacturers: Subject to compliance with requirements, provide products by one of the following:

1. B-line, an Eaton business.
2. Hilti, Inc.
3. Mason Industries, Inc.

B. Description: MFMA-4, shop- or field-fabricated bracing assembly made of slotted steel channels with accessories for attachment to braced component at one end and to building structure at the other end and other matching components and with corrosion-resistant coating; rated in tension, compression, and torsion forces.

2.15 RESTRAINT CABLES

A. Manufacturers: Subject to compliance with requirements, provide products by one of the following:

1. CADDY; a brand of nVent.
2. Gripple Inc.
3. Kinetics Noise Control, Inc.

B. Restraint Cables: ASTM A603 galvanized ASTM A492 stainless-steel cables. End connections made of steel assemblies with thimbles, brackets, swivel, and bolts designed for restraining cable service; with a minimum of two clamping bolts for cable engagement.

2.16 SEISMIC-RESTRAINT ACCESSORIES

A. Manufacturers: Subject to compliance with requirements, provide products by one of the following:

1. B-line, an Eaton business.
2. CADDY; a brand of nVent.
3. TOLCO.

B. Hanger-Rod Stiffener: Steel tube or steel slotted-support-system sleeve with internally bolted connections Reinforcing steel angle clamped to hanger rod.

C. Hinged and Swivel Brace Attachments: Multifunctional steel connectors for attaching hangers to rigid channel bracings and restraint cables.

D. Bushings for Floor-Mounted Equipment Anchor Bolts: Neoprene bushings designed for rigid equipment mountings and matched to type and size of anchor bolts and studs.

E. Bushing Assemblies for Wall-Mounted Equipment Anchorage: Assemblies of neoprene elements and steel sleeves designed for rigid equipment mountings and matched to type and size of attachment devices used.

F. Resilient Isolation Washers and Bushings: One-piece, molded, oil- and water-resistant neoprene, with a flat washer face.

2.17 MECHANICAL ANCHOR BOLTS

A. Manufacturers: Subject to compliance with requirements, provide products by one of the following:

1. B-line, an Eaton business.
2. Hilti, Inc.
3. Mason Industries, Inc.

B. Mechanical Anchor Bolts: Drilled-in and stud-wedge or female-wedge type in zinc-coated steel for interior applications and stainless steel for exterior applications. Select anchor bolts with strength required for anchor and as tested according to ASTM E488.

2.18 ADHESIVE ANCHOR BOLTS

A. Manufacturers: Subject to compliance with requirements, provide products by one of the following:

1. Hilti, Inc.
2. Kinetics Noise Control, Inc.
3. Mason Industries, Inc.

B. Adhesive Anchor Bolts: Drilled-in and capsule anchor system containing PVC or urethane methacrylate-based resin and accelerator, or injected polymer or hybrid mortar adhesive. Provide anchor bolts and hardware with zinc-coated steel for interior applications and stainless steel for exterior applications. Select anchor bolts with strength required for anchor and as tested according to ASTM E488.

PART 3 - EXECUTION

3.1 EXAMINATION

A. Examine areas and equipment to receive vibration isolation and seismic-control devices for compliance with requirements for installation tolerances and other conditions affecting performance of the Work.

B. Examine roughing-in of reinforcement and cast-in-place anchors to verify actual locations before installation.

C. Proceed with installation only after unsatisfactory conditions have been corrected.

3.2 APPLICATIONS

A. Multiple Pipe Supports: Secure pipes to trapeze member with clamps approved for application by an evaluation service member of ICC-ES OSHPD an agency acceptable to authorities having jurisdiction.

B. Hanger-Rod Stiffeners: Install hanger-rod stiffeners where indicated or scheduled on Drawings to receive them and where required to prevent buckling of hanger rods due to seismic forces.

C. Strength of Support and Seismic-Restraint Assemblies: Where not indicated, select sizes of components so strength is adequate to carry present and future static and seismic loads within specified loading limits.

3.3 VIBRATION CONTROL AND SEISMIC-RESTRAINT DEVICE INSTALLATION

A. Coordinate the location of embedded connection hardware with supported equipment attachment and mounting points and with requirements for concrete reinforcement and formwork specified in Section 033000 "Cast-in-Place Concrete."

B. Installation of vibration isolators must not cause any change of position of equipment, piping, or ductwork resulting in stresses or misalignment.

C. Comply with requirements in Section 077200 "Roof Accessories" for installation of roof curbs, equipment supports, and roof penetrations.

D. Equipment Restraints:

1. Install seismic snubbers on plumbing equipment mounted on vibration isolators. Locate snubbers as close as possible to vibration isolators and bolt to equipment base and supporting structure.
2. Install resilient bolt isolation washers on equipment anchor bolts where clearance between anchor and adjacent surface exceeds 0.125 inch.
3. Install seismic-restraint devices using methods approved by an evaluation service member of ICC-ES OSHPD an agency acceptable to authorities having jurisdiction that provides required submittals for component.

E. Piping Restraints:

1. Comply with requirements in MSS SP-127.
2. Space lateral supports a maximum of 40 feet o.c., and longitudinal supports a maximum of 80 feet o.c.
3. Brace a change of direction longer than 12 feet.

F. Install cables so they do not bend across edges of adjacent equipment or building structure.

G. Install seismic-restraint devices using methods approved by an evaluation service member of ICC-ES OSHPD an agency acceptable to authorities having jurisdiction that provides required submittals for component.

H. Install bushing assemblies for anchor bolts for floor-mounted equipment, arranged to provide resilient media between anchor bolt and mounting hole in concrete base.

I. Install bushing assemblies for mounting bolts for wall-mounted equipment, arranged to provide resilient media where equipment or equipment-mounting channels are attached to wall.

J. Attachment to Structure: If specific attachment is not indicated, anchor bracing to structure at flanges of beams, at upper truss chords of bar joists, or at concrete members.

K. Drilled-in Anchors:

1. Identify position of reinforcing steel and other embedded items prior to drilling holes for anchors. Do not damage existing reinforcing or embedded items during coring or drilling. Notify the structural engineer if reinforcing steel or other embedded items are encountered during drilling. Locate and avoid prestressed tendons, electrical and telecommunications conduit, and gas lines.
2. Do not drill holes in concrete or masonry until concrete, mortar, or grout has achieved full design strength.

3. Wedge Anchors: Protect threads from damage during anchor installation. Heavy-duty sleeve anchors shall be installed with sleeve fully engaged in the structural element to which anchor is to be fastened.
4. Adhesive Anchors: Clean holes to remove loose material and drilling dust prior to installation of adhesive. Place adhesive in holes proceeding from the bottom of the hole and progressing toward the surface in such a manner as to avoid introduction of air pockets in the adhesive.
5. Set anchors to manufacturer's recommended torque, using a torque wrench.
6. Install zinc-coated steel anchors for interior and stainless-steel anchors for exterior applications.

3.4 ACCOMMODATION OF DIFFERENTIAL SEISMIC MOTION

A. Install flexible connections in piping where they cross seismic joints, where adjacent sections or branches are supported by different structural elements, and where the connections terminate with connection to equipment that is anchored to a different structural element from the one supporting the connections as they approach equipment. Comply with requirements in Section 221116 "Domestic Water Piping" for piping flexible connections.

3.5 FIELD QUALITY CONTROL

A. Testing Agency: Engage a qualified testing agency to perform tests and inspections.

B. Perform tests and inspections.

C. Tests and Inspections:

1. Provide evidence of recent calibration of test equipment by a testing agency acceptable to authorities having jurisdiction.
2. Schedule test with Owner, through Architect, before connecting anchorage device to restrained component (unless postconnection testing has been approved), and with at least seven days' advance notice.
3. Obtain Architect's approval before transmitting test loads to structure. Provide temporary load-spreading members.
4. Test at least four of each type and size of installed anchors and fasteners selected by Architect.
5. Test to 90 percent of rated proof load of device.
6. Measure isolator restraint clearance.
7. Measure isolator deflection.
8. Verify snubber minimum clearances.

D. Remove and replace malfunctioning units and retest as specified above.

E. Prepare test and inspection reports.

3.6 ADJUSTING

A. Adjust isolators after piping system is at operating weight.

B. Adjust limit stops on restrained-spring isolators to mount equipment at normal operating height. After equipment installation is complete, adjust limit stops so they are out of contact during normal operation.

END OF SECTION 220548

SECTION 220553 - IDENTIFICATION FOR PLUMBING PIPING AND EQUIPMENT

PART 1 - GENERAL

1.1 RELATED DOCUMENTS

A. Drawings and general provisions of the Contract, including General and Supplementary Conditions and Division 01 Specification Sections, apply to this Section.

1.2 SUMMARY

A. Section Includes:

1. Equipment labels.
2. Warning signs and labels.
3. Pipe labels.
4. Stencils.
5. Valve tags.
6. Warning tags.

1.3 ACTION SUBMITTALS

A. Submittals shall be formatted per Section 220000 “General Plumbing Requirements”. The manufacturer shall resubmit the specification section showing compliance with each respective paragraphs and specified items and features in that particular specification section. All **exceptions** shall be clearly identified by referencing respective paragraph and other requirements. Next to each specification item, indicate the following:

1. “No Exception Taken”.
2. “Exception”. All exceptions shall be clearly identified by referencing respective paragraph and other requirements along with proposed alternative.

B. Product Data: For each type of product indicated.

C. Samples: For color, letter style, and graphic representation required for each identification material and device.

D. Equipment Label Schedule: Include a listing of all equipment to be labeled with the proposed content for each label.

E. Valve numbering scheme.

F. Valve Schedules: For each piping system to include in maintenance manuals.

1.4 COORDINATION

A. Coordinate installation of identifying devices with completion of covering and painting of surfaces where devices are to be applied.

B. Coordinate installation of identifying devices with locations of access panels and doors.

C. Install identifying devices before installing acoustical ceilings and similar concealment.

1.5 GENERAL

A. Manufacturers:

1. Craftmark Identification Systems
2. Seton Identification Products
3. Setmark

PART 2 - PRODUCTS

2.1 EQUIPMENT LABELS

A. Metal Labels for Equipment:

1. Manufacturers: Subject to compliance with requirements, provide products by one of the following:

a. Brady Corporation.
b. Marking Services, Inc.
c. Seton Identification Products.

2. Material and Thickness: Brass, 0.032-inch or anodized aluminum, 0.032-inch minimum thickness, and having predrilled or stamped holes for attachment hardware.
3. Letter Color: White.
4. Background Color: Red.
5. Minimum Label Size: Length and width vary for required label content, but not less than 2-1/2 by 3/4 inch.
6. Minimum Letter Size: 1/4 inch for name of units if viewing distance is less than 24 inches, 1/2 inch for viewing distances up to 72 inches, and proportionately larger lettering for greater viewing distances. Include secondary lettering two-thirds to three-quarters the size of principal lettering.
7. Fasteners: Stainless-steel rivets or self-tapping screws.
8. Adhesive: Contact-type permanent adhesive, compatible with label and with substrate.

B. Plastic Labels for Equipment:

1. Manufacturers: Subject to compliance with requirements, provide products by one of the following:

a. Brady Corporation.

b. Marking Services, Inc.
c. Seton Identification Products.

2. Material and Thickness: Multilayer, multicolor, plastic labels for mechanical engraving, 1/16 inch thick, and having predrilled holes for attachment hardware.
3. Letter Color: White.
4. Background Color: Red.
5. Maximum Temperature: Able to withstand temperatures up to 160 deg F.
6. Minimum Label Size: Length and width vary for required label content, but not less than 2-1/2 by 3/4 inch.
7. Minimum Letter Size: 1/4 inch for name of units if viewing distance is less than 24 inches, 1/2 inch for viewing distances up to 72 inches, and proportionately larger lettering for greater viewing distances. Include secondary lettering two-thirds to three-quarters the size of principal lettering.
8. Fasteners: Stainless-steel rivets or self-tapping screws.
9. Adhesive: Contact-type permanent adhesive, compatible with label and with substrate.

C. Label Content: Include equipment's Drawing designation or unique equipment number, Drawing numbers where equipment is indicated (plans, details, and schedules), and the Specification Section number and title where equipment is specified.

D. Equipment Label Schedule: For each item of equipment to be labeled, on 8-1/2-by-11-inch bond paper. Tabulate equipment identification number and identify Drawing numbers where equipment is indicated (plans, details, and schedules) and the Specification Section number and title where equipment is specified. Equipment schedule shall be included in operation and maintenance data.

2.2 WARNING SIGNS AND LABELS

A. Manufacturers: Subject to compliance with requirements, provide products by one of the following:

1. Brady Corporation.
2. Marking Services, Inc.
3. Seton Identification Products.

B. Material and Thickness: Multilayer, multicolor, plastic labels for mechanical engraving, 1/8 inch thick and having predrilled holes for attachment hardware.

C. Letter Color: Black.

D. Background Color: Yellow.

E. Maximum Temperature: Able to withstand temperatures up to 160 deg F.

F. Minimum Label Size: Length and width vary for required label content, but not less than 2-1/2 by 3/4 inch.

G. Minimum Letter Size: 1/4 inch for name of units if viewing distance is less than 24 inches, 1/2 inch for viewing distances up to 72 inches, and proportionately larger lettering for greater viewing distances. Include secondary lettering two-thirds to three-quarters the size of principal lettering.

H. Fasteners: Stainless-steel rivets or self-tapping screws.

I. Adhesive: Contact-type permanent adhesive, compatible with label and with substrate.

J. Label Content: Include caution and warning information plus emergency notification instructions.

2.3 PIPE LABELS

A. Manufacturers: Subject to compliance with requirements, provide products by one of the following:

1. Actioncraft Products, Inc.; a division of Industrial Test Equipment Co., Inc.
2. Brady Corporation.
3. Seton Identification Products.

B. Do not use pipe labels or plastic tapes for bare pipes conveying fluids at temperatures of 125 deg F (52 deg C) or higher.

C. General Requirements for Manufactured Pipe Labels: Preprinted, color-coded, with lettering indicating service, and showing flow direction.

D. Pretensioned Pipe Labels: Precoiled, semirigid plastic formed to cover full circumference of pipe and to attach to pipe without fasteners or adhesive.

E. Self-Adhesive Pipe Labels: Printed plastic with contact-type, permanent-adhesive backing.

F. Pipe Label Contents: Include identification of piping service using same designations or abbreviations as used on Drawings; also include pipe size and an arrow indicating flow direction.

1. Flow-Direction Arrows: Integral with piping-system service lettering to accommodate both directions or as separate unit on each pipe label to indicate flow direction.
2. Lettering Size: Size letters according to ASME A13.1 for piping.

2.4 STENCILS

A. Stencils for Piping:

1. Manufacturers: Subject to compliance with requirements, provide products by one of the following:

a. Brimar Industries, Inc.
b. Marking Services, Inc.

c. Seton Identification Products.

2. Lettering Size: Size letters according to ASME A13.1 for piping.
3. Stencil Material: Brass.
4. Stencil Paint: Exterior, gloss, alkyd enamel or acrylic enamel in colors complying with recommendations in ASME A13.1 unless otherwise indicated. Paint may be in pressurized spray-can form.
5. Identification Paint: Exterior, alkyd enamel or acrylic enamel in colors according to ASME A13.1 unless otherwise indicated. Paint may be in pressurized spray-can form.

2.5 VALVE TAGS

A. Manufacturers: Subject to compliance with requirements, provide products by one of the following:

1. Actioncraft Products, Inc.; a division of Industrial Test Equipment Co., Inc.
2. Brady Corporation.
3. Brimar Industries, Inc.

B. Valve Tags: Stamped or engraved with 1/4-inch letters for piping system abbreviation and 1/2-inch numbers.

1. Tag Material: Brass, 0.032-inch minimum thickness, and having predrilled or stamped holes for attachment hardware.
2. Fasteners: Brass wire-link chain or beaded chain or S-hook.

C. Valve Schedules: For each piping system, on 8-1/2-by-11-inch bond paper. Tabulate valve number, piping system, system abbreviation (as shown on valve tag), location of valve (room or space), normal-operating position (open, closed, or modulating), and variations for identification. Mark valves for emergency shutoff and similar special uses.

1. Valve-tag schedule shall be included in operation and maintenance data.

2.6 WARNING TAGS

A. Manufacturers: Subject to compliance with requirements, provide products by one of the following:

1. Brady Corporation.
2. Brimar Industries, Inc.
3. Carlton Industries, LP.

B. Description: Preprinted or partially preprinted accident-prevention tags of plasticized card stock with matte finish suitable for writing.

1. Size: Approximately 4 by 7 inches.
2. Fasteners: Brass grommet and wire.

3. Nomenclature: Large-size primary caption such as "DANGER," "CAUTION," or "DO NOT OPERATE."
4. Color: Safety yellow background with black lettering.

PART 3 - EXECUTION

3.1 PREPARATION

A. Clean piping and equipment surface of substances that could impair bond of identification devices, including dirt, oil, grease, release agents, and incompatible primers, paints, and encapsulants.

3.2 GENERAL INSTALLATION REQUIREMENTS

A. Coordinate installation of identifying devices with completion of covering and painting of surfaces where devices are to be applied.

B. Coordinate installation of identifying devices with locations of access panels and doors.

C. Install identifying devices before installing acoustical ceilings and similar concealment.

3.3 EQUIPMENT LABEL INSTALLATION

A. Install or permanently fasten labels on each major item of mechanical equipment.

B. Locate equipment labels where accessible and visible.

3.4 PIPE LABEL INSTALLATION

A. Piping Color Coding: Painting of piping is specified in Section 099123 "Interior Painting."

B. Stenciled Pipe Label Option: Stenciled labels may be provided instead of manufactured pipe labels, at Installer's option. Install stenciled pipe labels, complying with ASME A13.1, with painted, color-coded bands or rectangles on each piping system.

1. Identification Paint: Use for contrasting background.
2. Stencil Paint: Use for pipe marking.

C. Pipe Label Locations: Locate pipe labels where piping is exposed or above accessible ceilings in finished spaces; machine rooms; accessible maintenance spaces such as shafts, tunnels, and plenums; and exterior exposed locations as follows:

1. Near each valve and control device.
2. Near each branch connection, excluding short takeoffs for fixtures and terminal units. Where flow pattern is not obvious, mark each pipe at branch.
3. Near penetrations through walls, floors, ceilings, and inaccessible enclosures.

4. At access doors, manholes, and similar access points that permit view of concealed piping.
5. Near major equipment items and other points of origination and termination.
6. Spaced at maximum intervals of 50 feet along each run. Reduce intervals to 25 feet in areas of congested piping and equipment.
7. On piping above removable acoustical ceilings. Omit intermediately spaced labels.

D. Directional Flow Arrows: Arrows shall be used to indicate direction of flow in pipes, including pipes where flow is allowed in both directions.

E. Pipe Label Color Schedule:

1. Low-Pressure Compressed Air Piping:

   a. Background: Safety blue.
   b. Letter Colors: White.

2. High-Pressure Compressed Air Piping:

   a. Background: Safety blue.
   b. Letter Colors: White.

3. Domestic Water Piping

   a. Background: Safety green.
   b. Letter Colors: White.

4. Sanitary Waste and Storm Drainage Piping:

   a. Background Color: Safety green.
   b. Letter Color: White.

3.5 VALVE-TAG INSTALLATION

A. Install tags on valves and control devices in piping systems, except check valves, valves within factory-fabricated equipment units, shutoff valves, faucets, convenience and lawn-watering hose connections, and similar roughing-in connections of end-use fixtures and units. List tagged valves in a valve schedule.

B. Valve-Tag Application Schedule: Tag valves according to size, shape, and color scheme and with captions similar to those indicated in the following subparagraphs:

1. Valve-Tag Size and Shape:

   a. Cold Water: 2 inches, round.
   b. Hot Water: 2 inches, round.
   c. Low-Pressure Compressed Air: 2 inches, round.
   d. High-Pressure Compressed Air: 2 inches, round.

2. Valve-Tag Colors:

a. Cold Water: Natural.
b. Hot Water: Natural.
c. Low-Pressure Compressed Air: Natural.
d. High-Pressure Compressed Air: Natural.

3. Letter Colors:

a. Cold Water: Black White.
b. Hot Water: Black.
c. Low-Pressure Compressed Air: Black.
d. High-Pressure Compressed Air: Black.

3.6 WARNING-TAG INSTALLATION

A. Write required message on, and attach warning tags to, equipment and other items where required.

END OF SECTION 220553

SECTION 220719 - PLUMBING PIPING INSULATION

PART 1 - GENERAL

1.1 RELATED DOCUMENTS

A. Drawings and general provisions of the Contract, including General and Supplementary Conditions and Division 01 Specification Sections, apply to this Section.

1.2 SUMMARY

A. Section includes insulating the following plumbing piping services:

1. Domestic cold-water piping.
2. Domestic hot-water piping.
3. Domestic recirculating hot-water piping.
4. Domestic chilled-water piping for drinking fountains.
5. Sanitary waste piping exposed to freezing conditions.
6. Storm-water piping exposed to freezing conditions.
7. Roof drains and rainwater leaders.
8. Supplies and drains for handicap-accessible lavatories and sinks.

B. Related Sections:

1. Section 220716 "Plumbing Equipment Insulation."

1.3 ACTION SUBMITTALS

A. Submittals shall be formatted per Section 220000 “General Plumbing Requirements”. The manufacturer shall resubmit the specification section showing compliance with each respective paragraphs and specified items and features in that particular specification section. All **exceptions** shall be clearly identified by referencing respective paragraph and other requirements. Next to each specification item, indicate the following:

1. “No Exception Taken”.
2. “Exception”. All exceptions shall be clearly identified by referencing respective paragraph and other requirements along with proposed alternative.

B. Product Data: For each type of product indicated. Include thermal conductivity, water-vapor permeance thickness, and jackets (both factory- and field-applied, if any).

C. Sustainable Design Submittals:

1. Product Data: For adhesives, mastics, and sealants, indicating VOC content.
2. Laboratory Test Reports: For adhesives, mastics, and sealants, indicating compliance with requirements for low-emitting materials.

D. Shop Drawings: Include plans, elevations, sections, details, and attachments to other work.

1. Detail application of protective shields, saddles, and inserts at hangers for each type of insulation and hanger.
2. Detail attachment and covering of heat tracing inside insulation.
3. Detail insulation application at pipe expansion joints for each type of insulation.
4. Detail insulation application at elbows, fittings, flanges, valves, and specialties for each type of insulation.
5. Detail removable insulation at piping specialties, equipment connections, and access panels.
6. Detail application of field-applied jackets.
7. Detail application at linkages of control devices.

E. Samples: For each type of insulation and jacket indicated. Identify each Sample, describing product and intended use. Sample sizes are as follows:

1. Preformed Pipe Insulation Materials: 12 inches long by NPS 2.
2. Jacket Materials for Pipe: 12 inches long by NPS 2.
3. Sheet Jacket Materials: 12 inches square.
4. Manufacturer's Color Charts: For products where color is specified, show the full range of colors available for each type of finish material.

1.4 INFORMATIONAL SUBMITTALS

A. Qualification Data: For qualified Installer.

B. Material Test Reports: From a qualified testing agency acceptable to authorities having jurisdiction indicating, interpreting, and certifying test results for compliance of insulation materials, sealers, attachments, cements, and jackets, with requirements indicated. Include dates of tests and test methods employed.

C. Field quality-control reports.

1.5 QUALITY ASSURANCE

A. Installer Qualifications: Skilled mechanics who have successfully completed an apprenticeship program or another craft training program certified by the Department of Labor, Bureau of Apprenticeship and Training.

B. Surface-Burning Characteristics: For insulation and related materials, as determined by testing identical products according to ASTM E84 by a testing agency acceptable to authorities having jurisdiction. Factory label insulation and jacket materials and adhesive, mastic, tapes, and cement material containers, with appropriate markings of applicable testing agency.

1. Insulation Installed Indoors: Flame-spread index of 25 or less, and smoke-developed index of 50 or less.
2. Insulation Installed Outdoors: Flame-spread index of 75 or less, and smoke-developed index of 150 or less.

C. Mockups: Before installing insulation, build mockups for each type of insulation and finish listed below to demonstrate quality of insulation application and finishes. Build mockups in the location indicated or, if not indicated, as directed by Architect. Use materials indicated for the completed Work.

1. Piping Mockups:

a. One 10-foot section of NPS 2 straight pipe.
b. One each of a 90-degree threaded, welded, and flanged elbow.
c. One each of a threaded, welded, and flanged tee fitting.
d. One NPS 2 or smaller valve, and one NPS 2-1/2 or larger valve.
e. Four support hangers including hanger shield and insert.
f. One threaded strainer and one flanged strainer with removable portion of insulation.
g. One threaded reducer and one welded reducer.
h. One pressure temperature tap.
i. One mechanical coupling.

2. For each mockup, fabricate cutaway sections to allow observation of application details for insulation materials, adhesives, mastics, attachments, and jackets.
3. Notify Architect seven days in advance of dates and times when mockups will be constructed.
4. Obtain Architect's approval of mockups before starting insulation application.
5. Approval of mockups does not constitute approval of deviations from the Contract Documents contained in mockups unless Architect specifically approves such deviations in writing.
6. Maintain mockups during construction in an undisturbed condition as a standard for judging the completed Work.
7. Demolish and remove mockups when directed.

D. Comply with the following applicable standards and other requirements specified for miscellaneous components:

1. Supply and Drain Protective Shielding Guards: ICC A117.1.

1.6 DELIVERY, STORAGE, AND HANDLING

A. Packaging: Insulation material containers shall be marked by manufacturer with appropriate ASTM standard designation, type and grade, and maximum use temperature.

1.7 COORDINATION

A. Coordinate sizes and locations of supports, hangers, and insulation shields specified in Section 220529 "Hangers and Supports for Plumbing Piping and Equipment."

B. Coordinate clearance requirements with piping Installer for piping insulation application. Before preparing piping Shop Drawings, establish and maintain clearance requirements for installation of insulation and field-applied jackets and finishes and for space required for maintenance.

C. Coordinate installation and testing of heat tracing.

1.8 SCHEDULING

A. Schedule insulation application after pressure testing systems and, where required, after installing and testing heat tracing. Insulation application may begin on segments that have satisfactory test results.

B. Complete installation and concealment of plastic materials as rapidly as possible in each area of construction.

PART 2 - PRODUCTS

2.1 INSULATION MATERIALS

A. Comply with requirements in "Piping Insulation Schedule, General," "Indoor Piping Insulation Schedule," "Outdoor, Aboveground Piping Insulation Schedule," and "Outdoor, Underground Piping Insulation Schedule" articles for where insulating materials shall be applied.

B. Products shall not contain asbestos, lead, mercury, or mercury compounds.

C. Products that come in contact with stainless steel shall have a leachable chloride content of less than 50 ppm when tested according to ASTM C871.

D. Insulation materials for use on austenitic stainless steel shall be qualified as acceptable according to ASTM C795.

E. Foam insulation materials shall not use CFC or HCFC blowing agents in the manufacturing process.

F. Flexible Elastomeric Insulation: Closed-cell, sponge- or expanded-rubber materials. Comply with ASTM C534, Type I for tubular materials.

1. Manufacturers: Subject to compliance with requirements, provide products by one of the following:

a. Aeroflex USA, Inc.
b. Armacell LLC.
c. K-Flex USA.

G. Mineral-Fiber Blanket Insulation: Mineral or glass fibers bonded with a thermosetting resin. Comply with ASTM C553, Type II and ASTM C1290, Type I. Factory-applied jacket requirements are specified in "Factory-Applied Jackets" Article.

1. Manufacturers: Subject to compliance with requirements, provide products by one of the following:

a. CertainTeed Corporation.

b. Johns Manville; a Berkshire Hathaway company.
c. Owens Corning.

H. Mineral-Fiber, Preformed Pipe Insulation:

1. Manufacturers: Subject to compliance with requirements, provide products by one of the following:

a. Johns Manville; a Berkshire Hathaway company.
b. Manson Insulation Inc.
c. Owens Corning.

2. Type I, 850 Deg F Materials: Mineral or glass fibers bonded with a thermosetting resin. Comply with ASTM C547, Type I, Grade A, with factory-applied ASJ with factory-applied ASJ-SSL. Factory-applied jacket requirements are specified in "Factory-Applied Jackets" Article.

I. Phenolic:

1. Manufacturers: Subject to compliance with requirements, provide products by the following:

a. Resolco Inc.

2. Preformed pipe insulation of rigid, expanded, closed-cell structure. Comply with ASTM C1126, Type III, Grade 1.
3. Block insulation of rigid, expanded, closed-cell structure. Comply with ASTM C1126, Type II, Grade 1.
4. Factory fabricate shapes according to ASTM C450 and ASTM C585.
5. Factory-Applied Jacket: ASJ. Requirements are specified in "Factory-Applied Jackets" Article.

2.2 INSULATING CEMENTS

A. Mineral-Fiber Insulating Cement: Comply with ASTM C195.

1. Manufacturers: Subject to compliance with requirements, provide products by the following:

a. Ramco Insulation, Inc.

B. Expanded or Exfoliated Vermiculite Insulating Cement: Comply with ASTM C196.

1. Manufacturers: Subject to compliance with requirements, provide products by the following:

a. Ramco Insulation, Inc.

C. Mineral-Fiber, Hydraulic-Setting Insulating and Finishing Cement: Comply with ASTM C449.

1. Manufacturers: Subject to compliance with requirements, provide products by the following:

    a. Ramco Insulation, Inc.

2.3 ADHESIVES

A. Materials shall be compatible with insulation materials, jackets, and substrates and for bonding insulation to itself and to surfaces to be insulated, unless otherwise indicated.

B. Flexible Elastomeric and Polyolefin Adhesive: Comply with MIL-A-24179A, Type II, Class I.

1. Manufacturers: Subject to compliance with requirements, provide products by one of the following:

    a. Aeroflex USA, Inc.
    b. Armacell LLC.
    c. K-Flex USA.

C. Mineral-Fiber Adhesive: Comply with MIL-A-3316C, Class 2, Grade A.

1. Manufacturers: Subject to compliance with requirements, provide products by one of the following:

    a. Childers Brand; H. B. Fuller Construction Products.
    b. Foster Brand; H. B. Fuller Construction Products.
    c. Eagle Bridges - Marathon Industries.

D. Phenolic Adhesive: Solvent-based resin adhesive, with a service temperature range of minus 75 to plus 300 deg F.

1. Manufacturers: Subject to compliance with requirements, provide products by one of the following:

    a. Childers Brand; H. B. Fuller Construction Products.
    b. Foster Brand; H. B. Fuller Construction Products.

E. ASJ Adhesive, and FSK Jacket Adhesive: Comply with MIL-A-3316C, Class 2, Grade A for bonding insulation jacket lap seams and joints.

1. Manufacturers: Subject to compliance with requirements, provide products by one of the following:

    a. Childers Brand; H. B. Fuller Construction Products.
    b. Foster Brand; H. B. Fuller Construction Products.
    c. Mon-Eco Industries, Inc.

F. PVC Jacket Adhesive: Compatible with PVC jacket.

1. Manufacturers: Subject to compliance with requirements, provide products by one of the following:

    a. Johns Manville; a Berkshire Hathaway company.
    b. P.I.C. Plastics, Inc.
    c. Dow Corning Corporation.

2.4 MASTICS AND COATINGS

A. Materials shall be compatible with insulation materials, jackets, and substrates.

1. Mastics: As recommended by insulation manufacturer and with a VOC content of 50 g/L or less.
2. Mastics shall comply with the testing and product requirements of the California Department of Public Health's "Standard Method for the Testing and Evaluation of Volatile Organic Chemical Emissions from Indoor Sources Using Environmental Chambers."

B. Vapor-Retarder Mastic: Water based; suitable for indoor use on below-ambient services.

1. Manufacturers: Subject to compliance with requirements, provide products by one of the following:

    a. Childers Brand; H. B. Fuller Construction Products.
    b. Foster Brand; H. B. Fuller Construction Products.
    c. Knauf Insulation.

2. Water-Vapor Permeance: Comply with ASTM C755, Section 7.2.2, Table 2, for insulation type and service conditions.
3. Service Temperature Range: Minus 20 to plus 180 deg F.
4. Solids Content: ASTM D1644, 58 percent by volume and 70 percent by weight.
5. Color: White.

C. Vapor-Retarder Mastic: Solvent based; suitable for indoor use on below-ambient services.

1. Manufacturers: Subject to compliance with requirements, provide products by one of the following:

    a. Childers Brand; H. B. Fuller Construction Products.
    b. Foster Brand; H. B. Fuller Construction Products.
    c. Eagle Bridges - Marathon Industries.

2. Water-Vapor Permeance: Comply with ASTM C755, Section 7.2.2, Table 2, for insulation type and service conditions.
3. Service Temperature Range: 0 to 180 deg F.
4. Color: White.

D. Vapor-Retarder Mastic: Solvent based; suitable for outdoor use on below-ambient services.

1. Manufacturers: Subject to compliance with requirements, provide products by one of the following:

    a. Childers Brand; H. B. Fuller Construction Products.
    b. Foster Brand; H. B. Fuller Construction Products.
    c. Eagle Bridges - Marathon Industries.

2. Water-Vapor Permeance: ASTM F 1249, 0.05 perm at 30-mil dry film thickness.
3. Service Temperature Range: Minus 50 to plus 220 deg F.
4. Color: White.

E. Breather Mastic: Water based; suitable for indoor and outdoor use on above-ambient services.

1. Manufacturers: Subject to compliance with requirements, provide products by one of the following:

    a. Childers Brand; H. B. Fuller Construction Products.
    b. Foster Brand; H. B. Fuller Construction Products.
    c. Knauf Insulation.
    d. Vimasco Corporation.

2. Water-Vapor Permeance: ASTM F 1249, 1.8 perms at 0.0625-inch dry film thickness.
3. Service Temperature Range: Minus 20 to plus 180 deg F.
4. Color: White.

2.5 LAGGING ADHESIVES

A. Description: Comply with MIL-A-3316C, Class I, Grade A, and shall be compatible with insulation materials, jackets, and substrates.

1. For indoor applications, use lagging adhesives that have a VOC content of 50 g/L or less when calculated according to 40 CFR 59, Subpart D (EPA Method 24).

2. Manufacturers: Subject to compliance with requirements, provide products by one of the following:

    a. Childers Brand; H. B. Fuller Construction Products.
    b. Foster Brand; H. B. Fuller Construction Products.
    c. Vimasco Corporation.

3. Fire-resistant, water-based lagging adhesive and coating for use indoors to adhere fire-resistant lagging cloths over pipe insulation.
4. Service Temperature Range: 0 to plus 180 deg F.
5. Color: White.

2.6 SEALANTS

A. Joint Sealants for Phenolic Products:

1. Manufacturers: Subject to compliance with requirements, provide products by one of the following:

    a. Childers Brand; H. B. Fuller Construction Products.
    b. Foster Brand; H. B. Fuller Construction Products.
    c. Pittsburgh Corning Corporation.

2. Materials shall be compatible with insulation materials, jackets, and substrates.
3. Permanently flexible, elastomeric sealant.
4. Service Temperature Range: Minus 100 to plus 300 deg F.
5. Color: White or gray.
6. Sealant shall have a VOC content of 420 g/L or less.
7. Sealant shall comply with the testing and product requirements of the California Department of Public Health's "Standard Method for the Testing and Evaluation of Volatile Organic Chemical Emissions from Indoor Sources Using Environmental Chambers."
8.

B. FSK and Metal Jacket Flashing Sealants:

1. Manufacturers: Subject to compliance with requirements, provide products by one of the following:

    a. Childers Brand; H. B. Fuller Construction Products.
    b. Foster Brand; H. B. Fuller Construction Products.
    c. Eagle Bridges - Marathon Industries.

2. Materials shall be compatible with insulation materials, jackets, and substrates.
3. Fire- and water-resistant, flexible, elastomeric sealant.
4. Service Temperature Range: Minus 40 to plus 250 deg F.
5. Color: Aluminum.

C. ASJ Flashing Sealants, and Vinyl, PVDC, and PVC Jacket Flashing Sealants:

1. Manufacturers: Subject to compliance with requirements, provide products by the following:

    a. Childers Brand; H. B. Fuller Construction Products.

2. Materials shall be compatible with insulation materials, jackets, and substrates.
3. Fire- and water-resistant, flexible, elastomeric sealant.
4. Service Temperature Range: Minus 40 to plus 250 deg F.
5. Color: White.

2.7 FACTORY-APPLIED JACKETS

A. Insulation system schedules indicate factory-applied jackets on various applications. When factory-applied jackets are indicated, comply with the following:

1. ASJ: White, kraft-paper, fiberglass-reinforced scrim with aluminum-foil backing; complying with ASTM C1136, Type I.
2. ASJ-SSL: ASJ with self-sealing, pressure-sensitive, acrylic-based adhesive covered by a removable protective strip; complying with ASTM C1136, Type I.
3. FSK Jacket: Aluminum-foil, fiberglass-reinforced scrim with kraft-paper backing; complying with ASTM C1136, Type II.

2.8 FIELD-APPLIED FABRIC-REINFORCING MESH

A. Woven Glass-Fiber Fabric: Approximately 2 oz./sq. yd. with a thread count of 10 strands by 10 strands/sq. in. for covering pipe and pipe fittings.

1. Manufacturers: Subject to compliance with requirements, provide products by the following:

a. Childers Brand; H. B. Fuller Construction Products.

B. Woven Polyester Fabric: Approximately 1 oz./sq. yd. with a thread count of 10 strands by 10 strands/sq. in., in a Leno weave, for pipe.

1. Manufacturers: Subject to compliance with requirements, provide products by one of the following:

a. Foster Brand; H. B. Fuller Construction Products.
b. Vimasco Corporation.

2.9 FIELD-APPLIED CLOTHS

A. Woven Glass-Fiber Fabric: Comply with MIL-C-20079H, Type I, plain weave, and presized a minimum of 8 oz./sq. yd..

1. Manufacturers: Subject to compliance with requirements, provide products by the following:

a. Alpha Associates, Inc.

2.10 FIELD-APPLIED JACKETS

A. Field-applied jackets shall comply with ASTM C921, Type I, unless otherwise indicated.

B. PVC Jacket: High-impact-resistant, UV-resistant PVC complying with ASTM D1784, Class 16354-C; thickness as scheduled; roll stock ready for shop or field cutting and forming. Thickness is indicated in field-applied jacket schedules.

1. Manufacturers: Subject to compliance with requirements, provide products by one of the following:

a. Johns Manville; a Berkshire Hathaway company.
b. P.I.C. Plastics, Inc.

c. Proto Corporation.

2. Adhesive: As recommended by jacket material manufacturer.
3. Color: White.
4. Factory-fabricated fitting covers to match jacket if available; otherwise, field fabricate.

a. Shapes: 45- and 90-degree, short- and long-radius elbows, tees, valves, flanges, unions, reducers, end caps, soil-pipe hubs, traps, mechanical joints, and P-trap and supply covers for lavatories.

C. Metal Jacket:

1. Manufacturers: Subject to compliance with requirements, provide products by one of the following:

a. ITW Insulation Systems; Illinois Tool Works, Inc.
b. RPR Products, Inc.

2. Aluminum Jacket: Comply with ASTM B209, Alloy 3003, 3005, 3105, or 5005, Temper H-14.

a. Factory cut and rolled to size.
b. Finish and thickness are indicated in field-applied jacket schedules.
c. Moisture Barrier for Indoor Applications: 3-mil-thick, heat-bonded polyethylene and kraft paper.
d. Moisture Barrier for Outdoor Applications: 3-mil-thick, heat-bonded polyethylene and kraft paper.
e. Factory-Fabricated Fitting Covers:

1) Same material, finish, and thickness as jacket.
2) Preformed 2-piece or gore, 45- and 90-degree, short- and long-radius elbows.
3) Tee covers.
4) Flange and union covers.
5) End caps.
6) Beveled collars.
7) Valve covers.
8) Field fabricate fitting covers only if factory-fabricated fitting covers are not available.

D. Underground Direct-Buried Jacket: 125-mil-thick vapor barrier and waterproofing membrane consisting of a rubberized bituminous resin reinforced with a woven-glass fiber or polyester scrim and laminated aluminum foil.

1. Manufacturers: Subject to compliance with requirements, provide products by one of the following:

a. Pittsburgh Corning Corporation.
b. Polyguard Products, Inc.

2.11 TAPES

A. ASJ Tape: White vapor-retarder tape matching factory-applied jacket with acrylic adhesive, complying with ASTM C1136.

1. Manufacturers: Subject to compliance with requirements, provide products by one of the following:

   a. Avery Dennison Corporation, Specialty Tapes Division.
   b. Ideal Tape Co., Inc., an American Biltrite Company.
   c. Knauf Insulation.

2. Width: 3 inches.
3. Thickness: 11.5 mils.
4. Adhesion: 90 ounces force/inch in width.
5. Elongation: 2 percent.
6. Tensile Strength: 40 lbf/inch in width.
7. ASJ Tape Disks and Squares: Precut disks or squares of ASJ tape.

B. FSK Tape: Foil-face, vapor-retarder tape matching factory-applied jacket with acrylic adhesive; complying with ASTM C1136.

1. Manufacturers: Subject to compliance with requirements, provide products by one of the following:

   a. Avery Dennison Corporation, Specialty Tapes Division.
   b. Ideal Tape Co., Inc., an American Biltrite Company.
   c. Knauf Insulation.

2. Width: 3 inches.
3. Thickness: 6.5 mils.
4. Adhesion: 90 ounces force/inch in width.
5. Elongation: 2 percent.
6. Tensile Strength: 40 lbf/inch in width.
7. FSK Tape Disks and Squares: Precut disks or squares of FSK tape.

C. PVC Tape: White vapor-retarder tape matching field-applied PVC jacket with acrylic adhesive; suitable for indoor and outdoor applications.

1. Manufacturers: Subject to compliance with requirements, provide products by the following:

   a. Ideal Tape Co., Inc., an American Biltrite Company.

2. Width: 2 inches.
3. Thickness: 6 mils.
4. Adhesion: 64 ounces force/inch in width.
5. Elongation: 500 percent.
6. Tensile Strength: 18 lbf/inch in width.

D. Aluminum-Foil Tape: Vapor-retarder tape with acrylic adhesive.

1. Manufacturers: Subject to compliance with requirements, provide products by one of the following:

    a. Avery Dennison Corporation, Specialty Tapes Division.
    b. Ideal Tape Co., Inc., an American Biltrite Company.
    c. Knauf Insulation.

2. Width: 2 inches.
3. Thickness: 3.7 mils.
4. Adhesion: 100 ounces force/inch in width.
5. Elongation: 5 percent.
6. Tensile Strength: 34 lbf/inch in width.

2.12 SECUREMENTS

A. Bands:

1. Manufacturers: Subject to compliance with requirements, provide products by one of the following:

    a. ITW Insulation Systems; Illinois Tool Works, Inc.
    b. RPR Products, Inc.

2. Stainless Steel: ASTM A167 or ASTM A240/A240M, Type 304; 0.015 inch thick, 3/4 inch wide with wing seal or closed seal.
3. Aluminum: ASTM B209, Alloy 3003, 3005, 3105, or 5005; Temper H-14, 0.020 inch thick, 3/4 inch wide with wing seal or closed seal.

B. Staples: Outward-clinching insulation staples, nominal 3/4-inch-wide, stainless steel or Monel.

C. Wire: 0.080-inch nickel-copper alloy 0.062-inch soft-annealed, stainless steel 0.062-inch soft-annealed, galvanized steel.

1. Manufacturers: Subject to compliance with requirements, provide products by the following:

    a. C & F Wire.

2.13 PROTECTIVE SHIELDING GUARDS

A. Protective Shielding Pipe Covers:

1. Manufacturers: Subject to compliance with requirements, provide products by one of the following:

    a. McGuire Manufacturing. (With integral insulation).
    b. Or equal products.

2. Description: Manufactured plastic wraps for covering plumbing fixture hot- and cold-water supplies and trap and drain piping. Comply with Americans with Disabilities Act (ADA) requirements.

B. Protective Shielding Piping Enclosures: (Subject to architect's approval).

1. Manufacturers: Subject to compliance with requirements, provide products by one of the following:

a. Truebro.
b. Zurn Industries, LLC.

2. Description: Manufactured plastic enclosure for covering plumbing fixture hot- and cold-water supplies and trap and drain piping. Comply with ADA requirements.

PART 3 - EXECUTION

3.1 EXAMINATION

A. Examine substrates and conditions for compliance with requirements for installation tolerances and other conditions affecting performance of insulation application.

1. Verify that systems to be insulated have been tested and are free of defects.
2. Verify that surfaces to be insulated are clean and dry.

B. Proceed with installation only after unsatisfactory conditions have been corrected.

3.2 PREPARATION

A. Surface Preparation: Clean and dry surfaces to receive insulation. Remove materials that will adversely affect insulation application.

B. Surface Preparation: Clean and prepare surfaces to be insulated. Before insulating, apply a corrosion coating to insulated surfaces as follows:

1. Stainless Steel: Coat 300 series stainless steel with an epoxy primer 5 mils thick and an epoxy finish 5 mils thick if operating in a temperature range between 140 and 300 deg F. Consult coating manufacturer for appropriate coating materials and application methods for operating temperature range.
2. Carbon Steel: Coat carbon steel operating at a service temperature between 32 and 300 deg F with an epoxy coating. Consult coating manufacturer for appropriate coating materials and application methods for operating temperature range.

C. Coordinate insulation installation with the trade installing heat tracing. Comply with requirements for heat tracing that apply to insulation.

D. Mix insulating cements with clean potable water; if insulating cements are to be in contact with stainless-steel surfaces, use demineralized water.

3.3 GENERAL INSTALLATION REQUIREMENTS

A. Install insulation materials, accessories, and finishes with smooth, straight, and even surfaces; free of voids throughout the length of piping including fittings, valves, and specialties.

B. Install insulation materials, forms, vapor barriers or retarders, jackets, and thicknesses required for each item of pipe system as specified in insulation system schedules.

C. Install accessories compatible with insulation materials and suitable for the service. Install accessories that do not corrode, soften, or otherwise attack insulation or jacket in either wet or dry state.

D. Install insulation with longitudinal seams at top and bottom of horizontal runs.

E. Install multiple layers of insulation with longitudinal and end seams staggered.

F. Do not weld brackets, clips, or other attachment devices to piping, fittings, and specialties.

G. Keep insulation materials dry during application and finishing.

H. Install insulation with tight longitudinal seams and end joints. Bond seams and joints with adhesive recommended by insulation material manufacturer.

I. Install insulation with least number of joints practical.

J. Where vapor barrier is indicated, seal joints, seams, and penetrations in insulation at hangers, supports, anchors, and other projections with vapor-barrier mastic.

   1. Install insulation continuously through hangers and around anchor attachments.
   2. For insulation application where vapor barriers are indicated, extend insulation on anchor legs from point of attachment to supported item to point of attachment to structure. Taper and seal ends at attachment to structure with vapor-barrier mastic.
   3. Install insert materials and install insulation to tightly join the insert. Seal insulation to insulation inserts with adhesive or sealing compound recommended by insulation material manufacturer.
   4. Cover inserts with jacket material matching adjacent pipe insulation. Install shields over jacket, arranged to protect jacket from tear or puncture by hanger, support, and shield.

K. Apply adhesives, mastics, and sealants at manufacturer's recommended coverage rate and wet and dry film thicknesses.

L. Install insulation with factory-applied jackets as follows:

   1. Draw jacket tight and smooth.

2. Cover circumferential joints with 3-inch-wide strips, of same material as insulation jacket. Secure strips with adhesive and outward clinching staples along both edges of strip, spaced 4 inches o.c.
3. Overlap jacket longitudinal seams at least 1-1/2 inches. Install insulation with longitudinal seams at bottom of pipe. Clean and dry surface to receive self-sealing lap. Staple laps with outward clinching staples along edge at 2 inches 4 inches o.c.

    a. For below-ambient services, apply vapor-barrier mastic over staples.

4. Cover joints and seams with tape, according to insulation material manufacturer's written instructions, to maintain vapor seal.
5. Where vapor barriers are indicated, apply vapor-barrier mastic on seams and joints and at ends adjacent to pipe flanges and fittings.

M. Cut insulation in a manner to avoid compressing insulation more than 75 percent of its nominal thickness.

N. Finish installation with systems at operating conditions. Repair joint separations and cracking due to thermal movement.

O. Repair damaged insulation facings by applying same facing material over damaged areas. Extend patches at least 4 inches beyond damaged areas. Adhere, staple, and seal patches similar to butt joints.

P. For above-ambient services, do not install insulation to the following:

1. Vibration-control devices.
2. Testing agency labels and stamps.
3. Nameplates and data plates.
4. Cleanouts.

3.4 PENETRATIONS

A. Insulation Installation at Roof Penetrations: Install insulation continuously through roof penetrations.

1. Seal penetrations with flashing sealant.
2. For applications requiring only indoor insulation, terminate insulation above roof surface and seal with joint sealant. For applications requiring indoor and outdoor insulation, install insulation for outdoor applications tightly joined to indoor insulation ends. Seal joint with joint sealant.
3. Extend jacket of outdoor insulation outside roof flashing at least 2 inches below top of roof flashing.
4. Seal jacket to roof flashing with flashing sealant.

B. Insulation Installation at Underground Exterior Wall Penetrations: Terminate insulation flush with sleeve seal. Seal terminations with flashing sealant.

C. Insulation Installation at Aboveground Exterior Wall Penetrations: Install insulation continuously through wall penetrations.

1. Seal penetrations with flashing sealant.
2. For applications requiring only indoor insulation, terminate insulation inside wall surface and seal with joint sealant. For applications requiring indoor and outdoor insulation, install insulation for outdoor applications tightly joined to indoor insulation ends. Seal joint with joint sealant.
3. Extend jacket of outdoor insulation outside wall flashing and overlap wall flashing at least 2 inches.
4. Seal jacket to wall flashing with flashing sealant.

D. Insulation Installation at Interior Wall and Partition Penetrations (That Are Not Fire Rated): Install insulation continuously through walls and partitions.

E. Insulation Installation at Fire-Rated Wall and Partition Penetrations: Install insulation continuously through penetrations of fire-rated walls and partitions.

1. Comply with requirements in Section 078413 "Penetration Firestopping" for firestopping and fire-resistive joint sealers.

F. Insulation Installation at Floor Penetrations:

1. Pipe: Install insulation continuously through floor penetrations.
2. Seal penetrations through fire-rated assemblies. Comply with requirements in Section 078413 "Penetration Firestopping."

3.5 GENERAL PIPE INSULATION INSTALLATION

A. Requirements in this article generally apply to all insulation materials except where more specific requirements are specified in various pipe insulation material installation articles.

B. Insulation Installation on Fittings, Valves, Strainers, Flanges, and Unions:

1. Install insulation over fittings, valves, strainers, flanges, unions, and other specialties with continuous thermal and vapor-retarder integrity unless otherwise indicated.
2. Insulate pipe elbows using preformed fitting insulation or mitered fittings made from same material and density as adjacent pipe insulation. Each piece shall be butted tightly against adjoining piece and bonded with adhesive. Fill joints, seams, voids, and irregular surfaces with insulating cement finished to a smooth, hard, and uniform contour that is uniform with adjoining pipe insulation.
3. Insulate tee fittings with preformed fitting insulation or sectional pipe insulation of same material and thickness as used for adjacent pipe. Cut sectional pipe insulation to fit. Butt each section closely to the next and hold in place with tie wire. Bond pieces with adhesive.
4. Insulate valves using preformed fitting insulation or sectional pipe insulation of same material, density, and thickness as used for adjacent pipe. Overlap adjoining pipe insulation by not less than two times the thickness of pipe insulation, or one pipe diameter, whichever is thicker. For valves, insulate up to and including the bonnets, valve stuffing-box studs, bolts, and nuts. Fill joints, seams, and irregular surfaces with insulating cement.

5. Insulate strainers using preformed fitting insulation or sectional pipe insulation of same material, density, and thickness as used for adjacent pipe. Overlap adjoining pipe insulation by not less than two times the thickness of pipe insulation, or one pipe diameter, whichever is thicker. Fill joints, seams, and irregular surfaces with insulating cement. Insulate strainers so strainer basket flange or plug can be easily removed and replaced without damaging the insulation and jacket. Provide a removable reusable insulation cover. For below-ambient services, provide a design that maintains vapor barrier.
6. Insulate flanges and unions using a section of oversized preformed pipe insulation. Overlap adjoining pipe insulation by not less than two times the thickness of pipe insulation, or one pipe diameter, whichever is thicker.
7. Cover segmented insulated surfaces with a layer of finishing cement and coat with a mastic. Install vapor-barrier mastic for below-ambient services and a breather mastic for above-ambient services. Reinforce the mastic with fabric-reinforcing mesh. Trowel the mastic to a smooth and well-shaped contour.
8. For services not specified to receive a field-applied jacket except for flexible elastomeric and polyolefin, install fitted PVC cover over elbows, tees, strainers, valves, flanges, and unions. Terminate ends with PVC end caps. Tape PVC covers to adjoining insulation facing using PVC tape.
9. Stencil or label the outside insulation jacket of each union with the word "union." Match size and color of pipe labels.

C. Insulate instrument connections for thermometers, pressure gages, pressure temperature taps, test connections, flow meters, sensors, switches, and transmitters on insulated pipes. Shape insulation at these connections by tapering it to and around the connection with insulating cement and finish with finishing cement, mastic, and flashing sealant.

D. Install removable insulation covers at locations indicated. Installation shall conform to the following:

1. Make removable flange and union insulation from sectional pipe insulation of same thickness as that on adjoining pipe. Install same insulation jacket as adjoining pipe insulation.
2. When flange and union covers are made from sectional pipe insulation, extend insulation from flanges or union long at least two times the insulation thickness over adjacent pipe insulation on each side of flange or union. Secure flange cover in place with stainless-steel or aluminum bands. Select band material compatible with insulation and jacket.
3. Construct removable valve insulation covers in same manner as for flanges, except divide the two-part section on the vertical center line of valve body.
4. When covers are made from block insulation, make two halves, each consisting of mitered blocks wired to stainless-steel fabric. Secure this wire frame, with its attached insulation, to flanges with tie wire. Extend insulation at least 2 inches over adjacent pipe insulation on each side of valve. Fill space between flange or union cover and pipe insulation with insulating cement. Finish cover assembly with insulating cement applied in two coats. After first coat is dry, apply and trowel second coat to a smooth finish.
5. Unless a PVC jacket is indicated in field-applied jacket schedules, finish exposed surfaces with a metal jacket.

3.6 INSTALLATION OF FLEXIBLE ELASTOMERIC INSULATION

A. Seal longitudinal seams and end joints with manufacturer's recommended adhesive to eliminate openings in insulation that allow passage of air to surface being insulated.

B. Insulation Installation on Pipe Flanges:

1. Install pipe insulation to outer diameter of pipe flange.
2. Make width of insulation section same as overall width of flange and bolts, plus twice the thickness of pipe insulation.
3. Fill voids between inner circumference of flange insulation and outer circumference of adjacent straight pipe segments with cut sections of sheet insulation of same thickness as pipe insulation.
4. Secure insulation to flanges and seal seams with manufacturer's recommended adhesive to eliminate openings in insulation that allow passage of air to surface being insulated.

C. Insulation Installation on Pipe Fittings and Elbows:

1. Install mitered sections of pipe insulation.
2. Secure insulation materials and seal seams with manufacturer's recommended adhesive to eliminate openings in insulation that allow passage of air to surface being insulated.

D. Insulation Installation on Valves and Pipe Specialties:

1. Install preformed valve covers manufactured of same material as pipe insulation when available.
2. When preformed valve covers are not available, install cut sections of pipe and sheet insulation to valve body. Arrange insulation to permit access to packing and to allow valve operation without disturbing insulation.
3. Install insulation to flanges as specified for flange insulation application.
4. Secure insulation to valves and specialties and seal seams with manufacturer's recommended adhesive to eliminate openings in insulation that allow passage of air to surface being insulated.

3.7 INSTALLATION OF MINERAL-FIBER INSULATION

A. Insulation Installation on Straight Pipes and Tubes:

1. Secure each layer of preformed pipe insulation to pipe with wire or bands and tighten bands without deforming insulation materials.
2. Where vapor barriers are indicated, seal longitudinal seams, end joints, and protrusions with vapor-barrier mastic and joint sealant.
3. For insulation with factory-applied jackets on above-ambient surfaces, secure laps with outward clinched staples at 6 inches o.c.
4. For insulation with factory-applied jackets on below-ambient surfaces, do not staple longitudinal tabs. Instead, secure tabs with additional adhesive as recommended by insulation material manufacturer and seal with vapor-barrier mastic and flashing sealant.

B. Insulation Installation on Pipe Flanges:

1. Install preformed pipe insulation to outer diameter of pipe flange.

2. Make width of insulation section same as overall width of flange and bolts, plus twice the thickness of pipe insulation.
3. Fill voids between inner circumference of flange insulation and outer circumference of adjacent straight pipe segments with mineral-fiber blanket insulation.
4. Install jacket material with manufacturer's recommended adhesive, overlap seams at least 1 inch, and seal joints with flashing sealant.

C. Insulation Installation on Pipe Fittings and Elbows:

1. Install preformed sections of same material as straight segments of pipe insulation when available.
2. When preformed insulation elbows and fittings are not available, install mitered sections of pipe insulation, to a thickness equal to adjoining pipe insulation. Secure insulation materials with wire or bands.

D. Insulation Installation on Valves and Pipe Specialties:

1. Install preformed sections of same material as straight segments of pipe insulation when available.
2. When preformed sections are not available, install mitered sections of pipe insulation to valve body.
3. Arrange insulation to permit access to packing and to allow valve operation without disturbing insulation.
4. Install insulation to flanges as specified for flange insulation application.

3.8 INSTALLATION OF PHENOLIC INSULATION

A. General Installation Requirements:

1. Secure single-layer insulation with stainless-steel bands at 12-inch intervals and tighten bands without deforming insulation materials.
2. Install 2-layer insulation with joints tightly butted and staggered at least 3 inches. Secure inner layer with 0.062-inch wire spaced at 12-inch intervals. Secure outer layer with stainless-steel bands at 12-inch intervals.

B. Insulation Installation on Straight Pipes and Tubes:

1. Secure each layer of insulation to pipe with wire or bands and tighten bands without deforming insulation materials.
2. Where vapor barriers are indicated, seal longitudinal seams, end joints, and protrusions with vapor-barrier mastic and joint sealant.
3. For insulation with factory-applied jackets on above-ambient services, secure laps with outward clinched staples at 6 inches o.c.
4. For insulation with factory-applied jackets with vapor retarders on below-ambient services, do not staple longitudinal tabs. Instead, secure tabs with additional adhesive as recommended by insulation material manufacturer and seal with vapor-barrier mastic and flashing sealant.

C. Insulation Installation on Pipe Flanges:

1. Install preformed pipe insulation to outer diameter of pipe flange.
2. Make width of insulation section same as overall width of flange and bolts, plus twice the thickness of pipe insulation.
3. Fill voids between inner circumference of flange insulation and outer circumference of adjacent straight pipe segments with cut sections of block insulation of same material and thickness as pipe insulation.

D. Insulation Installation on Pipe Fittings and Elbows:

1. Install preformed insulation sections of same material as straight segments of pipe insulation. Secure according to manufacturer's written instructions.

E. Insulation Installation on Valves and Pipe Specialties:

1. Install preformed insulation sections of same material as straight segments of pipe insulation. Secure according to manufacturer's written instructions.
2. Arrange insulation to permit access to packing and to allow valve operation without disturbing insulation.
3. Install insulation to flanges as specified for flange insulation application.

3.9 FIELD-APPLIED JACKET INSTALLATION

A. Where glass-cloth jackets are indicated, install directly over bare insulation or insulation with factory-applied jackets.

1. Draw jacket smooth and tight to surface with 2-inch overlap at seams and joints.
2. Embed glass cloth between two 0.062-inch-thick coats of lagging adhesive.
3. Completely encapsulate insulation with coating, leaving no exposed insulation.

B. Where FSK jackets are indicated, install as follows:

1. Draw jacket material smooth and tight.
2. Install lap or joint strips with same material as jacket.
3. Secure jacket to insulation with manufacturer's recommended adhesive.
4. Install jacket with 1-1/2-inch laps at longitudinal seams and 3-inch-wide joint strips at end joints.
5. Seal openings, punctures, and breaks in vapor-retarder jackets and exposed insulation with vapor-barrier mastic.

C. Where PVC jackets are indicated, install with 1-inch overlap at longitudinal seams and end joints. Seal with manufacturer's recommended adhesive.

1. Apply two continuous beads of adhesive to seams and joints, one bead under lap and the finish bead along seam and joint edge.

D. Where metal jackets are indicated, install with 2-inch overlap at longitudinal seams and end joints. Overlap longitudinal seams arranged to shed water. Seal end joints with weatherproof sealant recommended by insulation manufacturer. Secure jacket with stainless-steel bands 12 inches o.c. and at end joints.

3.10 FINISHES

A. Insulation with ASJ, Glass-Cloth, or Other Paintable Jacket Material: Paint jacket with paint system identified below and as specified in Section 099113 "Exterior Painting" and Section 099123 "Interior Painting."

1. Flat Acrylic Finish: Two finish coats over a primer that is compatible with jacket material and finish coat paint. Add fungicidal agent to render fabric mildew proof.

a. Finish Coat Material: Interior, flat, latex-emulsion size.

B. Flexible Elastomeric Thermal Insulation: After adhesive has fully cured, apply two coats of insulation manufacturer's recommended protective coating.

C. Color: Final color as selected by Architect. Vary first and second coats to allow visual inspection of the completed Work.

D. Do not field paint aluminum or stainless-steel jackets.

3.11 FIELD QUALITY CONTROL

A. Testing Agency: Engage a qualified testing agency to perform tests and inspections.

B. Perform tests and inspections.

C. Tests and Inspections:

1. Inspect pipe, fittings, strainers, and valves, randomly selected by Architect, by removing field-applied jacket and insulation in layers in reverse order of their installation. Extent of inspection shall be limited to three locations of straight pipe, three locations of threaded fittings, three locations of welded fittings, two locations of threaded strainers, two locations of welded strainers, three locations of threaded valves, and three locations of flanged valves for each pipe service defined in the "Piping Insulation Schedule, General" Article.

D. All insulation applications will be considered defective Work if sample inspection reveals noncompliance with requirements.

E. All adhesive shall be as recommended by cellular glass manufacturer and with a VOC content of 80 g/L or less.

F. Per ASHRAE 189.1, All adhesives and sealants shall comply with the testing and product requirements of the California Department of Public Health's "Standard Method for the Testing and Evaluation of Volatile Organic Chemical Emissions from Indoor Sources Using Environmental Chambers."

3.12 PIPING INSULATION SCHEDULE, GENERAL

A. Acceptable preformed pipe and tubular insulation materials and thicknesses are identified for each piping system and pipe size range. If more than one material is listed for a piping system, selection from materials listed is Contractor's option.

B. Items Not Insulated: Unless otherwise indicated, do not install insulation on the following:

1. Drainage piping located in crawl spaces.
2. Underground piping.
3. Chrome-plated pipes and fittings unless there is a potential for personnel injury.

3.13 INDOOR PIPING INSULATION SCHEDULE

A. Domestic Hot and Recirculated Hot Water:

1. NPS 3/4 and Smaller: Insulation shall be one of the following:

a. Mineral-Fiber, Preformed Pipe Insulation, Type I: 1 inch thick.

2. NPS 1 and Larger: Insulation shall be one of the following:

a. Mineral-Fiber, Preformed Pipe Insulation, Type I: 1 inch thick.

B. Domestic Chilled Water (Potable):

1. All Pipe Sizes: Insulation shall be one of the following:

a. Flexible Elastomeric: 1 inch thick.
b. Mineral-Fiber, Preformed Pipe Insulation, Type I: 1 inch thick.
c. Phenolic: 1 inch thick.

C. Stormwater and Overflow:

1. All Pipe Sizes: Insulation shall be one of the following:

a. Flexible Elastomeric: 1 inch thick.
b. Mineral-Fiber, Preformed Pipe Insulation, Type I: 1 inch thick.

D. Roof Drain and Overflow Drain Bodies:

1. All Pipe Sizes: Insulation shall be one of the following:
a. Flexible Elastomeric: 1 inch thick.
b. Mineral-Fiber, Preformed Pipe Insulation, Type I: 1 inch thick.

E. Sanitary Waste Piping Where Heat Tracing Is Installed:

1. All Pipe Sizes: Insulation shall be one of the following:
a. Mineral-Fiber, Preformed Pipe Insulation, Type I: 1-1/2 inches thick.

F. Floor Drains, Traps, and Sanitary Drain Piping within 10 Feet of Drain Receiving Condensate and Equipment Drain Water below 60 Deg F:

1. All Pipe Sizes: Insulation shall be the following:
   a. Flexible Elastomeric: 1 inch thick.
   b. Mineral-Fiber, Preformed Pipe Insulation, Type I: 1 inch thick.

3.14 INDOOR, FIELD-APPLIED JACKET SCHEDULE

A. Install jacket over insulation material. For insulation with factory-applied jacket, install the field-applied jacket over the factory-applied jacket.

B. Piping, Concealed: None.

C. Piping, Exposed: PVC, Color-Coded by system, 30 mils thick for all indoor applications.

3.15 OUTDOOR, FIELD-APPLIED JACKET SCHEDULE

A. Install jacket over insulation material. For insulation with factory-applied jacket, install the field-applied jacket over the factory-applied jacket.

B. Piping, Concealed: None.

C. Piping, Exposed: Aluminum, Stucco Embossed, 0.024 inch thick.

END OF SECTION 220719

SECTION 221116 - DOMESTIC WATER PIPING

PART 1 - GENERAL

1.1 RELATED DOCUMENTS

A. Drawings and general provisions of the Contract, including General and Supplementary Conditions and Division 01 Specification Sections, apply to this Section.

1.2 SUMMARY

A. Section Includes:

1. Copper tube and fittings.
2. Piping joining materials.
3. Encasement for piping.
4. Transition fittings.
5. Dielectric fittings.

1.3 ACTION SUBMITTALS

A. Submittals shall be formatted per Section 220000 “General Plumbing Requirements”. The manufacturer shall resubmit the specification section showing compliance with each respective paragraphs and specified items and features in that particular specification section. All **exceptions** shall be clearly identified by referencing respective paragraph and other requirements. Next to each specification item, indicate the following:

1. “No Exception Taken”.
2. “Exception”. All exceptions shall be clearly identified by referencing respective paragraph and other requirements along with proposed alternative.

B. Product Data: For transition fittings and dielectric fittings.

C. Sustainable Design Submittals:

1. Product Data: For adhesives, indicating VOC content.
2. Laboratory Test Reports: For adhesives, indicating compliance with requirements for low-emitting materials.

1.4 INFORMATIONAL SUBMITTALS

A. System purging and disinfecting activities report.

B. Field quality-control reports.

1.5 FIELD CONDITIONS

A. Interruption of Existing Water Service: Do not interrupt water service to facilities occupied by Owner or others unless permitted under the following conditions and then only after arranging to provide temporary water service according to requirements indicated:

1. Notify Architect, Construction Manager and/or Owner no fewer than two days in advance of proposed interruption of water service.
2. Do not interrupt water service without Architect's, Construction Manager's and/or Owner's written permission.

PART 2 - PRODUCTS

2.1 PIPING MATERIALS

A. Comply with requirements in "Piping Schedule" Article for applications of pipe, tube, fitting materials, and joining methods for specific services, service locations, and pipe sizes.

B. Potable-water piping and components shall comply with NSF 14, NSF 61, and NSF 372. Include marking "NSF-pw" on applicable piping.

2.2 COPPER TUBE AND FITTINGS

A. Hard Copper Tube: ASTM B 88, Type L and ASTM B 88, Type K water tube, drawn temper.

B. Cast-Copper, Solder-Joint Fittings: ASME B16.18, pressure fittings.

C. Wrought-Copper, Solder-Joint Fittings: ASME B16.22, wrought-copper pressure fittings.

D. Bronze Flanges: ASME B16.24, Class 150, with solder-joint ends.

E. Copper Unions:

1. MSS SP-123.
2. Cast-copper-alloy, hexagonal-stock body.
3. Ball-and-socket, metal-to-metal seating surfaces.
4. Solder-joint or threaded ends.

F. Copper, Brass, or Bronze Pressure-Seal-Joint Fittings:

1. Manufacturers: Subject to compliance with requirements, provide products by one of the following:

a. Apollo Flow Controls; Conbraco Industries, Inc.
b. Mueller Industries, Inc.
c. NIBCO INC.

2. Fittings: Cast-brass, cast-bronze or wrought-copper with EPDM O-ring seal in each end. Sizes NPS 2-1/2 and larger with stainless steel grip ring and EPDM O-ring seal.

3. Minimum 200-psig working-pressure rating at 250 deg F.

G. Appurtenances for Grooved-End Copper Tubing:

1. Manufacturers: Subject to compliance with requirements, available manufacturers offering products that may be incorporated into the Work include, but are not limited to the following:

a. Anvil International.
b. Shurjoint-Apollo Piping Products USA Inc.
c. Victaulic Company.

2. Bronze Fittings for Grooved-End, Copper Tubing: ASTM B 75/B 75M copper tube or ASTM B 584 bronze castings.
3. Mechanical Couplings for Grooved-End Copper Tubing:

a. Copper-tube dimensions and design similar to AWWA C606.
b. Ferrous housing sections.
c. EPDM-rubber gaskets suitable for hot and cold water.
d. Bolts and nuts.
e. Minimum Pressure Rating: 300 psig.

2.3 PIPING JOINING MATERIALS

A. Pipe-Flange Gasket Materials:

1. AWWA C110/A21.10, rubber, flat face, 1/8 inch thick or ASME B16.21, nonmetallic and asbestos free unless otherwise indicated.
2. Full-face or ring type unless otherwise indicated.

B. Metal, Pipe-Flange Bolts and Nuts: ASME B18.2.1, carbon steel unless otherwise indicated.

C. Solder Filler Metals: ASTM B 32, lead-free alloys.

D. Flux: ASTM B 813, water flushable.

E. Brazing Filler Metals: AWS A5.8M/A5.8, BCuP Series, copper-phosphorus alloys for general-duty brazing unless otherwise indicated.

F. Plastic, Pipe-Flange Gaskets, Bolts, and Nuts: Type and material recommended by piping system manufacturer unless otherwise indicated.

2.4 ENCASEMENT FOR PIPING

A. Standard: ASTM A 674 or AWWA C105/A21.5.

B. Form: Sheet or tube.

C. Color: Black or natural.

2.5 TRANSITION FITTINGS

A. General Requirements:

1. Same size as pipes to be joined.
2. Pressure rating at least equal to pipes to be joined.
3. End connections compatible with pipes to be joined.

B. Fitting-Type Transition Couplings: Manufactured piping coupling or specified piping system fitting.

C. Sleeve-Type Transition Coupling: AWWA C219.

1. Manufacturers: Subject to compliance with requirements, available manufacturers offering products that may be incorporated into the Work include, but are not limited to the following:

a. Dresser, Inc.
b. Jay R. Smith Mfg. Co.
c. JCM Industries, Inc.

D. Plastic-to-Metal Transition Fittings:

1. Manufacturers: Subject to compliance with requirements, available manufacturers offering products that may be incorporated into the Work include, but are not limited to the following:

a. Charlotte Pipe and Foundry Company.
b. Harvel Plastics, Inc.
c. Spears Manufacturing Company.

2. Description:

a. CPVC or PVC one-piece fitting with manufacturer's Schedule 80 equivalent dimensions.
b. One end with threaded brass insert and one solvent-cement-socket or threaded end.

E. Plastic-to-Metal Transition Unions:

1. Manufacturers: Subject to compliance with requirements, available manufacturers offering products that may be incorporated into the Work include, but are not limited to the following:

a. Colonial Engineering, Inc.
b. NIBCO INC.

c. Spears Manufacturing Company.

2. Description:

a. CPVC or PVC four-part union.
b. Brass or stainless-steel threaded end.
c. Solvent-cement-joint or threaded plastic end.
d. Rubber O-ring.
e. Union nut.

2.6 DIELECTRIC FITTINGS

A. General Requirements: Assembly of copper alloy and ferrous materials with separating nonconductive insulating material. Include end connections compatible with pipes to be joined.

B. Dielectric Unions:

1. Manufacturers: Subject to compliance with requirements, available manufacturers offering products that may be incorporated into the Work include, but are not limited to the following:

a. Central Plastics Company.
b. WATTS.
c. Wilkins.

2. Standard: ASSE 1079.
3. Pressure Rating: 125 psig minimum at 180 deg F.
4. End Connections: Solder-joint copper alloy and threaded ferrous.

C. Dielectric Flanges:

1. Manufacturers: Subject to compliance with requirements, available manufacturers offering products that may be incorporated into the Work include, but are not limited to the following:

a. Central Plastics Company.
b. WATTS.
c. Wilkins.

2. Standard: ASSE 1079.
3. Factory-fabricated, bolted, companion-flange assembly.
4. Pressure Rating: 125 psig minimum at 180 deg F.
5. End Connections: Solder-joint copper alloy and threaded ferrous; threaded solder-joint copper alloy and threaded ferrous.

D. Dielectric-Flange Insulating Kits:

1. Manufacturers: Subject to compliance with requirements, available manufacturers offering products that may be incorporated into the Work include, but are not limited to the following:

   a. Advance Products & Systems, Inc.
   b. Calpico, Inc.
   c. Central Plastics Company.

2. Nonconducting materials for field assembly of companion flanges.
3. Pressure Rating: 150 psig.
4. Gasket: Neoprene or phenolic.
5. Bolt Sleeves: Phenolic or polyethylene.
6. Washers: Phenolic with steel backing washers.

E. Dielectric Nipples:

1. Manufacturers: Subject to compliance with requirements, available manufacturers offering products that may be incorporated into the Work include, but are not limited to the following:

   a. Elster Perfection Corporation.
   b. Grinnell G-Fire by Johnson Controls Company.
   c. Precision Plumbing Products.

2. Standard: IAPMO PS 66.
3. Electroplated steel nipple complying with ASTM F 1545.
4. Pressure Rating and Temperature: 300 psig at 225 deg F.
5. End Connections: Male threaded or grooved.
6. Lining: Inert and noncorrosive, propylene.

PART 3 - EXECUTION

3.1 EARTHWORK

A. Comply with requirements in Section 312000 "Earth Moving" for excavating, trenching, and backfilling.

3.2 PIPING INSTALLATION

A. Drawing plans, schematics, and diagrams indicate general location and arrangement of domestic water piping. Indicated locations and arrangements are used to size pipe and calculate friction loss, expansion, and other design considerations. Install piping as indicated unless deviations to layout are approved on coordination drawings.

B. Install copper tubing under building slab according to CDA's "Copper Tube Handbook."

C. Install underground copper tube and ductile-iron pipe in PE encasement according to ASTM A 674 or AWWA C105/A21.5.

D. Install shutoff valve, hose-end drain valve, strainer, pressure gage, and test tee with valve inside the building at each domestic water-service entrance. Comply with requirements for pressure gages in Section 220519 "Meters and Gages for Plumbing Piping" and with requirements for drain valves and strainers in Section 221119 "Domestic Water Piping Specialties."

E. Install shutoff valve immediately upstream of each dielectric fitting.

F. Install water-pressure-reducing valves downstream from shutoff valves. Comply with requirements for pressure-reducing valves in Section 221119 "Domestic Water Piping Specialties."

G. Install domestic water piping level with 0.25 percent slope downward toward drain and plumb.

H. Rough-in domestic water piping for water-meter installation according to utility company's requirements.

I. Install seismic restraints on piping. Comply with requirements for seismic-restraint devices in Section 220548 "Vibration and Seismic Controls for Plumbing Piping and Equipment."

J. Install piping concealed from view and protected from physical contact by building occupants unless otherwise indicated and except in equipment rooms and service areas.

K. Install piping indicated to be exposed and piping in equipment rooms and service areas at right angles or parallel to building walls. Diagonal runs are prohibited unless specifically indicated otherwise.

L. Install piping above accessible ceilings to allow sufficient space for ceiling panel removal, and coordinate with other services occupying that space.

M. Install piping to permit valve servicing.

N. Install nipples, unions, special fittings, and valves with pressure ratings the same as or higher than the system pressure rating used in applications below unless otherwise indicated.

O. Install piping free of sags and bends.

P. Install fittings for changes in direction and branch connections.

Q. Install pressure gages on suction and discharge piping for each plumbing pump and packaged booster pump. Comply with requirements for pressure gages in Section 220519 "Meters and Gages for Plumbing Piping."

R. Install thermostats in hot-water circulation piping. Comply with requirements for thermostats in Section 221123 "Domestic Water Pumps."

S. Install thermometers on inlet and outlet piping from each water heater. Comply with requirements for thermometers in Section 220519 "Meters and Gages for Plumbing Piping."

T. Install sleeves for piping penetrations of walls, ceilings, and floors. Comply with requirements for sleeves specified in Section 220517 "Sleeves and Sleeve Seals for Plumbing Piping."

U. Install sleeve seals for piping penetrations of concrete walls and slabs. Comply with requirements for sleeve seals specified in Section 220517 "Sleeves and Sleeve Seals for Plumbing Piping."

V. Install escutcheons for piping penetrations of walls, ceilings, and floors. Comply with requirements for escutcheons specified in Section 220518 "Escutcheons for Plumbing Piping."

3.3 JOINT CONSTRUCTION

A. Ream ends of pipes and tubes and remove burrs. Bevel plain ends of steel pipe.

B. Remove scale, slag, dirt, and debris from inside and outside of pipes, tubes, and fittings before assembly.

C. Threaded Joints: Thread pipe with tapered pipe threads according to ASME B1.20.1. Cut threads full and clean using sharp dies. Ream threaded pipe ends to remove burrs and restore full ID. Join pipe fittings and valves as follows:

1. Apply appropriate tape or thread compound to external pipe threads.
2. Damaged Threads: Do not use pipe or pipe fittings with threads that are corroded or damaged.

D. Brazed Joints for Copper Tubing: Comply with CDA's "Copper Tube Handbook," "Brazed Joints" chapter.

E. Soldered Joints for Copper Tubing: Apply ASTM B 813, water-flushable flux to end of tube. Join copper tube and fittings according to ASTM B 828 or CDA's "Copper Tube Handbook."

F. Pressure-Sealed Joints for Copper Tubing: Join copper tube and pressure-seal fittings with tools and procedure recommended by pressure-seal-fitting manufacturer. Leave insertion marks on pipe after assembly.

G. Joint Construction for Grooved-End Copper Tubing: Make joints according to AWWA C606. Roll groove ends of tubes. Lubricate and install gasket over ends of tubes or tube and fitting. Install coupling housing sections over gasket with keys seated in tubing grooves. Install and tighten housing bolts.

H. Joints for Dissimilar-Material Piping: Make joints using adapters compatible with materials of both piping systems.

3.4 TRANSITION FITTING INSTALLATION

A. Install transition couplings at joints of dissimilar piping.

B. Transition Fittings in Underground Domestic Water Piping:

1. Fittings for NPS 1-1/2 and Smaller: Fitting-type coupling.
2. Fittings for NPS 2 and Larger: Sleeve-type coupling.

C. Transition Fittings in Aboveground Domestic Water Piping NPS 2 and Smaller: Plastic-to-metal transition fittings or unions.

3.5 DIELECTRIC FITTING INSTALLATION

A. Install dielectric fittings in piping at connections of dissimilar metal piping and tubing.

B. Dielectric Fittings for NPS 2 and Smaller: Use dielectric couplings nipples or unions.

C. Dielectric Fittings for NPS 2-1/2 to NPS 4: Use dielectric flanges, flange kits or nipples.

D. Dielectric Fittings for NPS 5 and Larger: Use dielectric flange kits.

3.6 INSTALLATION OF HANGERS AND SUPPORTS

A. Comply with requirements for seismic-restraint devices specified in Section 220548 "Vibration and Seismic Controls for Plumbing Piping and Equipment."

B. Comply with requirements for hangers, supports, and anchor devices in Section 220529 "Hangers and Supports for Plumbing Piping and Equipment."

1. Vertical Piping: MSS Type 8 or 42, clamps.
2. Individual, Straight, Horizontal Piping Runs:

    a. 100 Feet and Less: MSS Type 1, adjustable, steel clevis hangers.
    b. Longer Than 100 Feet: MSS Type 43, adjustable roller hangers.
    c. Longer Than 100 Feet if Indicated: MSS Type 49, spring cushion rolls.

3. Multiple, Straight, Horizontal Piping Runs 100 Feet or Longer: MSS Type 44, pipe rolls. Support pipe rolls on trapeze.
4. Base of Vertical Piping: MSS Type 52, spring hangers.

C. Support vertical piping and tubing at base and at each floor.

D. Rod diameter may be reduced one size for double-rod hangers, to a minimum of 3/8 inch.

E. Install hangers for copper tubing with the following maximum horizontal spacing and minimum rod diameters:

1. NPS 3/4 and Smaller: 60 inches with 3/8-inch rod.
2. NPS 1 and NPS 1-1/4: 72 inches with 3/8-inch rod.
3. NPS 1-1/2 and NPS 2: 96 inches with 3/8-inch rod.
4. NPS 2-1/2: 108 inches with 1/2-inch rod.
5. NPS 3 to NPS 5: 10 feet with 1/2-inch rod.
6. NPS 6: 10 feet with 5/8-inch rod.

7. NPS 8: 10 feet with 3/4-inch rod.

F. Install supports for vertical copper tubing every 10 feet.

G. Install hangers for steel piping with the following maximum horizontal spacing and minimum rod diameters:

1. NPS 1-1/4 and Smaller: 84 inches with 3/8-inch rod.
2. NPS 1-1/2: 108 inches with 3/8-inch rod.
3. NPS 2: 10 feet with 3/8-inch rod.
4. NPS 2-1/2: 11 feet with 1/2-inch rod.
5. NPS 3 and NPS 3-1/2: 12 feet with 1/2-inch rod.
6. NPS 4 and NPS 5: 12 feet with 5/8-inch rod.
7. NPS 6: 12 feet with 3/4-inch rod.
8. NPS 8 to NPS 12: 12 feet with 7/8-inch rod.

H. Install supports for vertical steel piping every 15 feet.

I. Support piping and tubing not listed in this article according to MSS SP-58 and manufacturer's written instructions.

J. Install hangers for copper ductile iron tubing and piping, with maximum horizontal spacing and minimum rod diameters, to comply with MSS-58, locally enforced codes, and authorities having jurisdiction requirements, whichever are most stringent.

K. Support horizontal piping within 12 inches of each fitting.

L. Support vertical runs of copper tubing and piping to comply with MSS-58, locally enforced codes, and authorities having jurisdiction requirements, whichever are most stringent.

3.7 CONNECTIONS

A. Drawings indicate general arrangement of piping, fittings, and specialties.

B. When installing piping adjacent to equipment and machines, allow space for service and maintenance.

C. Connect domestic water piping to exterior water-service piping. Use transition fitting to join dissimilar piping materials.

D. Connect domestic water piping to water-service piping with shutoff valve; extend and connect to the following:

1. Domestic Water Booster Pumps: Cold-water suction and discharge piping.
2. Water Heaters: Cold-water inlet and hot-water outlet piping in sizes indicated, but not smaller than sizes of water heater connections.
3. Plumbing Fixtures: Cold- and hot-water-supply piping in sizes indicated, but not smaller than that required by plumbing code.

4. Equipment: Cold- and hot-water-supply piping as indicated, but not smaller than equipment connections. Provide shutoff valve and union for each connection. Use flanges instead of unions for NPS 2-1/2 and larger.

3.8 IDENTIFICATION

A. Identify system components. Comply with requirements for identification materials and installation in Section 220553 "Identification for Plumbing Piping and Equipment."

B. Label pressure piping with system operating pressure.

3.9 FIELD QUALITY CONTROL

A. Perform the following tests and inspections:

1. Piping Inspections:

   a. Do not enclose, cover, or put piping into operation until it has been inspected and approved by authorities having jurisdiction.
   b. During installation, notify authorities having jurisdiction at least one day before inspection must be made. Perform tests specified below in presence of authorities having jurisdiction:

      1) Roughing-in Inspection: Arrange for inspection of piping before concealing or closing in after roughing in and before setting fixtures.
      2) Final Inspection: Arrange for authorities having jurisdiction to observe tests specified in "Piping Tests" Subparagraph below and to ensure compliance with requirements.

   c. Reinspection: If authorities having jurisdiction find that piping will not pass tests or inspections, make required corrections and arrange for reinspection.
   d. Reports: Prepare inspection reports and have them signed by authorities having jurisdiction.

2. Piping Tests:

   a. Fill domestic water piping. Check components to determine that they are not air bound and that piping is full of water.
   b. Test for leaks and defects in new piping and parts of existing piping that have been altered, extended, or repaired. If testing is performed in segments, submit a separate report for each test, complete with diagram of portion of piping tested.
   c. Leave new, altered, extended, or replaced domestic water piping uncovered and unconcealed until it has been tested and approved. Expose work that was covered or concealed before it was tested.
   d. Cap and subject piping to static water pressure of 50 psig above operating pressure, without exceeding pressure rating of piping system materials. Isolate test source and allow it to stand for four hours. Leaks and loss in test pressure constitute defects that must be repaired.

e. Repair leaks and defects with new materials, and retest piping or portion thereof until satisfactory results are obtained.
f. Prepare reports for tests and for corrective action required.

B. Domestic water piping will be considered defective if it does not pass tests and inspections.

C. Prepare test and inspection reports.

3.10 ADJUSTING

A. Perform the following adjustments before operation:

1. Close drain valves, hydrants, and hose bibbs.
2. Open shutoff valves to fully open position.
3. Open throttling valves to proper setting.
4. Adjust balancing valves in hot-water-circulation return piping to provide adequate flow.

   a. Manually adjust ball-type balancing valves in hot-water-circulation return piping to provide hot-water flow in each branch.
   b. Adjust calibrated balancing valves to flows indicated.

5. Remove plugs used during testing of piping and for temporary sealing of piping during installation.
6. Remove and clean strainer screens. Close drain valves and replace drain plugs.
7. Remove filter cartridges from housings and verify that cartridges are as specified for application where used and are clean and ready for use.
8. Check plumbing specialties and verify proper settings, adjustments, and operation.

3.11 CLEANING

A. Clean and disinfect potable domestic water piping as follows:

1. Purge new piping and parts of existing piping that have been altered, extended, or repaired before using.
2. Use purging and disinfecting procedures prescribed by authorities having jurisdiction; if methods are not prescribed, use procedures described in either AWWA C651 or AWWA C652 or follow procedures described below:

   a. Flush piping system with clean, potable water until dirty water does not appear at outlets.
   b. Fill and isolate system according to either of the following:

      1) Fill system or part thereof with water/chlorine solution with at least 50 ppm of chlorine. Isolate with valves and allow to stand for 24 hours.
      2) Fill system or part thereof with water/chlorine solution with at least 200 ppm of chlorine. Isolate and allow to stand for three hours.

c. Flush system with clean, potable water until no chlorine is in water coming from system after the standing time.
d. Repeat procedures if biological examination shows contamination.
e. Submit water samples in sterile bottles to authorities having jurisdiction.

B. Clean non-potable domestic water piping as follows:

1. Purge new piping and parts of existing piping that have been altered, extended, or repaired before using.
2. Use purging procedures prescribed by authorities having jurisdiction or; if methods are not prescribed, follow procedures described below:

a. Flush piping system with clean, potable water until dirty water does not appear at outlets.
b. Submit water samples in sterile bottles to authorities having jurisdiction. Repeat procedures if biological examination shows contamination.

C. Prepare and submit reports of purging and disinfecting activities. Include copies of water-sample approvals from authorities having jurisdiction.

D. Clean interior of domestic water piping system. Remove dirt and debris as work progresses.

3.12 PIPING SCHEDULE

A. Transition and special fittings with pressure ratings at least equal to piping rating may be used in applications below unless otherwise indicated.

B. Flanges and unions may be used for aboveground piping joints unless otherwise indicated.

C. Fitting Option: Extruded-tee connections and brazed joints may be used on aboveground copper tubing.

D. Under-building-slab, domestic water, building-service piping, NPS 3 and smaller, shall be the following:

1. Hard copper tube, ASTM B 88, Type K; wrought-copper, solder-joint fittings; and brazed joints.

E. Under-building-slab, domestic water, building-service piping, NPS 4 to NPS 8 and larger, shall be one of the following:

1. Hard copper tube, ASTM B 88, Type K; wrought-copper, solder-joint fittings; and brazed joints.

F. Under-building-slab, domestic water piping, NPS 2 and smaller, shall be one of the following:

1. Hard copper tube, ASTM B 88, Type K; wrought-copper, solder-joint fittings; and brazed joints.
2. PVC, Schedule 40or Schedule 80; socket fittings; and solvent-cemented joints.

G. Aboveground domestic water piping, NPS 2 and smaller, shall be one of the following:
   1. Hard copper tube, ASTM B 88, Type L; cast- or wrought-copper, solder-joint fittings; and brazed or soldered joints.
   2. Hard copper tube, ASTM B 88, Type L; copper pressure-seal-joint fittings; and pressure-sealed joints.

H. Aboveground domestic water piping, NPS 2-1/2 to NPS 4, shall be one of the following:

   1. Hard copper tube, ASTM B 88, Type L; cast- or wrought-copper, solder-joint fittings; and brazed or soldered joints.
   2. Hard copper tube, ASTM B 88, Type L; copper pressure-seal-joint fittings; and pressure-sealed joints.
   3. Hard copper tube, ASTM B 88, Type L; grooved-joint, copper-tube appurtenances; and grooved joints.

I. Aboveground domestic water piping, NPS 5 to NPS 8, shall be one of the following:

   1. Hard copper tube, ASTM B 88, Type L; cast- or wrought-copper, solder-joint fittings; and brazed or soldered joints.
   2. Hard copper tube, ASTM B 88, Type L; grooved-joint, copper-tube appurtenances; and grooved joints.

3.13 VALVE SCHEDULE

A. Drawings indicate valve types to be used. Where specific valve types are not indicated, the following requirements apply:

   1. Shutoff Duty: Use ball or gate valves for piping NPS 2 and smaller. Use butterfly, ball, or gate valves with flanged ends for piping NPS 2-1/2 and larger.
   2. Throttling Duty: Use ball or globe valves for piping NPS 2 and smaller. Use butterfly or ball valves with flanged ends for piping NPS 2-1/2 and larger.
   3. Hot-Water Circulation Piping, Balancing Duty: Calibrated or Memory-stop balancing valves.
   4. Drain Duty: Hose-end drain valves.

B. Use check valves to maintain correct direction of domestic water flow to and from equipment.

C. Iron grooved-end valves may be used with grooved-end piping.

END OF SECTION 221116

SECTION 221119 - DOMESTIC WATER PIPING SPECIALTIES

PART 1 - GENERAL

1.1 RELATED DOCUMENTS

A. Drawings and general provisions of the Contract, including General and Supplementary Conditions and Division 01 Specification Sections, apply to this Section.

1.2 SUMMARY

A. Section Includes:

1. Vacuum breakers.
2. Backflow preventers.
3. Water pressure-reducing valves.
4. Automatic water shutoff valves.
5. Balancing valves.
6. Temperature-actuated, water mixing valves.
7. Strainers.
8. Outlet boxes.
9. Hose bibbs.
10. Drain valves.
11. Water-hammer arresters.
12. Trap-seal primer valves.
13. Trap-seal primer systems.
14. Flexible connectors.
15. Water meters.

B. Related Requirements:

1. Section 220519 "Meters and Gauges for Plumbing Piping" for thermometers, pressure gages, and flow meters in domestic water piping.
2. Section 221116 "Domestic Water Piping and Fittings" for water meters.
3. Section 224713 "Drinking Fountains" for water filters for water coolers.

1.3 ACTION SUBMITTALS

A. Submittals shall be formatted per Section 220000 “General Plumbing Requirements”. The manufacturer shall resubmit the specification section showing compliance with each respective paragraphs and specified items and features in that particular specification section. All **exceptions** shall be clearly identified by referencing respective paragraph and other requirements. Next to each specification item, indicate the following:

1. “No Exception Taken”.

2. “Exception”. All exceptions shall be clearly identified by referencing respective paragraph and other requirements along with proposed alternative.

B. Product Data: For each type of product.

C. Shop Drawings: For domestic water piping specialties.

1. Include diagrams for power, signal, and control wiring.

1.4 INFORMATIONAL SUBMITTALS

A. Field quality-control reports.

1.5 CLOSEOUT SUBMITTALS

A. Operation and Maintenance Data: For domestic water piping specialties to include in emergency, operation, and maintenance manuals.

PART 2 - PRODUCTS

2.1 GENERAL REQUIREMENTS FOR PIPING SPECIALTIES

A. Potable-water piping and components shall comply with NSF 61 and NSF 14. Mark "NSF-pw" on plastic piping components.

B. Comply with NSF 372 for low lead.

2.2 PERFORMANCE REQUIREMENTS

A. Minimum Working Pressure for Domestic Water Piping Specialties: 125 psig unless otherwise indicated.

2.3 VACUUM BREAKERS

A. Pipe-Applied, Atmospheric-Type Vacuum Breakers:

1. Manufacturers: Subject to compliance with requirements, available manufacturers offering products that may be incorporated into the Work include, but are not limited to the following

a. Apollo Flow Controls; Conbraco Industries, Inc.
b. FEBCO; A WATTS Brand.
c. WATTS.
d. Zurn Industries, LLC.

2. Standard: ASSE 1001.
3. Size: NPS 1/4 to NPS 3, as required to match connected piping.
4. Body: Bronze.
5. Inlet and Outlet Connections: Threaded.
6. Finish: Rough bronzeor Chrome plated.

B. Hose-Connection Vacuum Breakers:

1. Manufacturers: Subject to compliance with requirements, available manufacturers offering products that may be incorporated into the Work include, but are not limited to the following

   a. Apollo Flow Controls; Conbraco Industries, Inc.
   b. Chicago Faucet Company.
   c. WATTS.
   d. Zurn Industries, LLC.

2. Standard: ASSE 1011.
3. Body: Bronze, nonremovable, with manual drain.
4. Outlet Connection: Garden-hose threaded complying with ASME B1.20.7.
5. Finish: Chrome or nickel plated.

C. Pressure Vacuum Breakers:

1. Manufacturers: Subject to compliance with requirements, available manufacturers offering products that may be incorporated into the Work include, but are not limited to the following

   a. Apollo Flow Controls; Conbraco Industries, Inc.
   b. FEBCO; A WATTS Brand.
   c. WATTS.
   d. Zurn Industries, LLC.

2. Standard: ASSE 1020.
3. Operation: Continuous-pressure applications.
4. Pressure Loss: 5 psig maximum, through middle third of flow range.
5. Size: Refer to Plumbing design drawings.
6. Design Flow Rate: Refer to Plumbing design drawings.
7. Selected Unit Flow Range Limits: Refer to Plumbing design drawings.
8. Pressure Loss at Design Flow Rate:Refer to Plumbing design drawings .
9. Accessories: Refer to Plumbing design drawings.

   a. Valves: Ball type, on inlet and outlet.

D. Spill-Resistant Vacuum Breakers:

1. Manufacturers: Subject to compliance with requirements, available manufacturers offering products that may be incorporated into the Work include, but are not limited to the following

a. Apollo Flow Controls; Conbraco Industries, Inc.
b. WATTS.
c. Zurn Industries, LLC.

2. Standard: ASSE 1056.
3. Operation: Continuous-pressure applications.
4. Size: NPS ¼, NPS 3/8, NPS 1/2,, NPS 3/4or NPS 1.
5. Accessories: Refer to Plumbing design drawings.

a. Valves: Ball type, on inlet and outlet.

2.4 BACKFLOW PREVENTERS

A. Intermediate Atmospheric-Vent Backflow Preventers:

1. Manufacturers: Subject to compliance with requirements, available manufacturers offering products that may be incorporated into the Work include, but are not limited to the following

a. Apollo Flow Controls; Conbraco Industries, Inc.
b. Beeco by Mifab.
c. FEBCO; A WATTS Brand.
d. WATTS.
e. Zurn Industries, LLC.

2. Standard: ASSE 1012.
3. Operation: Continuous-pressure applications.
4. Size: NPS 1/2or NPS 3/4.
5. Body: Bronze.
6. End Connections: Union, solder joint.
7. Finish: Chrome platedor Rough bronze.

B. Reduced-Pressure-Principle Backflow Preventers:

1. Manufacturers: Subject to compliance with requirements, available manufacturers offering products that may be incorporated into the Work include, but are not limited to the following

a. Ames Fire & Waterworks; A WATTS Brand.
b. Beeco by Mifab.
c. FEBCO; A WATTS Brand.
d. WATTS.
e. Zurn Industries, LLC.
f. Apollo Flow Controls; Conbraco Industries, Inc.

2. Standard: ASSE 1013.
3. Operation: Continuous-pressure applications.
4. Pressure Loss: 12 psig maximum, through middle third of flow range.
5. Size: Refer to Plumbing design drawings.

6. Design Flow Rate: Refer to Plumbing design drawings.
7. Selected Unit Flow Range Limits: Refer to Plumbing design drawings .
8. Pressure Loss at Design Flow Rate: Refer to Plumbing design drawings .
9. Body: Bronze for NPS 2 and smaller; cast iron with interior lining that complies with AWWA C550 or that is FDA approvedor stainless steel for NPS 2-1/2 and larger.
10. End Connections: Threaded for NPS 2 and smaller; flanged for NPS 2-1/2 and larger.
11. Configuration: Designed for horizontal, straight-throughor vertical-inlet, horizontal-center-section, and vertical-outlet flow.
12. Accessories:

    a. Valves NPS 2 and Smaller: Ball type with threaded ends on inlet and outlet.
    b. Valves NPS 2-1/2 and Larger: Outside-screw and yoke-gate type with flanged ends on inlet and outlet.
    c. Air-Gap Fitting: ASME A112.1.2, matching backflow-preventer connection.

C. Double-Check, Backflow-Prevention Assemblies:

1. Manufacturers: Subject to compliance with requirements, available manufacturers offering products that may be incorporated into the Work include, but are not limited to the following:

    a. Apollo Flow Controls; Conbraco Industries, Inc.
    b. Beeco by Mifab.
    c. FEBCO; A WATTS Brand.
    d. WATTS.
    e. Zurn Industries, LLC.

2. Standard: ASSE 1015.
3. Operation: Continuous-pressure applications unless otherwise indicated.
4. Pressure Loss: 5 psig maximum, through middle third of flow range.
5. Size: Refer to Plumbing design drawings.
6. Design Flow Rate: Refer to Plumbing design drawings.
7. Selected Unit Flow Range Limits: Refer to Plumbing design drawings.
8. Pressure Loss at Design Flow Rate: Refer to Plumbing design drawings.
9. Body: Bronze for NPS 2 and smaller; cast iron with interior lining that complies with AWWA C550 or that is FDA approvedor stainless steel for NPS 2-1/2 and larger.
10. End Connections: Threaded for NPS 2 and smaller; flanged for NPS 2-1/2 and larger.
11. Configuration: Designed for horizontal, straight-through flow.
12. Accessories:

    a. Valves NPS 2 and Smaller: Ball type with threaded ends on inlet and outlet.
    b. Valves NPS 2-1/2 and Larger: Outside-screw and yoke-gate type with flanged ends on inlet and outlet.

D. Beverage-Dispensing-Equipment Backflow Preventers:

1. Manufacturers: Subject to compliance with requirements, available manufacturers offering products that may be incorporated into the Work include, but are not limited to the following:

a. Apollo Flow Controls; Conbraco Industries, Inc.
b. WATTS.
c. Zurn Industries, LLC.

2. Standard: ASSE 1022.
3. Operation: Continuous-pressure applications.
4. Size: NPS 1/4 or NPS 3/8.
5. Body: Stainless steel.
6. End Connections: Threaded.

E. Dual-Check-Valve Backflow Preventers:

1. Manufacturers: Subject to compliance with requirements, available manufacturers offering products that may be incorporated into the Work include, but are not limited to the following:

a. Apollo Flow Controls; Conbraco Industries, Inc.
b. Beeco by Mifab.
c. FEBCO; A WATTS Brand.
d. WATTS.
e. Zurn Industries, LLC.

2. Standard: ASSE 1024.
3. Operation: Continuous-pressure applications.
4. Size: NPS 1/2, NPS 3/4, NPS 1or NPS 1-1/4.
5. Body: Bronze with union inlet.

F. Reduced-Pressure-Detector, Fire-Protection, Backflow-Preventer Assemblies:

1. Manufacturers: Subject to compliance with requirements, available manufacturers offering products that may be incorporated into the Work include, but are not limited to the following:

a. Apollo Flow Controls; Conbraco Industries, Inc.
b. FEBCO; A WATTS Brand.
c. WATTS.
d. Zurn Industries, LLC.

2. Standard: ASSE 1047 and is FM Global approved or UL listed.
3. Operation: Continuous-pressure applications.
4. Pressure Loss: 12 psig maximum, through middle third of flow range.
5. Size: Refer to Plumbing design drawings.
6. Design Flow Rate: Refer to Plumbing design drawings.
7. Selected Unit Flow Range Limits: Refer to Plumbing design drawings.
8. Pressure Loss at Design Flow Rate: Refer to Plumbing design drawings .
9. Body: Cast iron or steel with interior lining that complies with AWWA C550 or that is FDA approved orStainless steel.
10. End Connections: Flanged.
11. Configuration: Designed for horizontal, straight-throughor vertical-inlet, horizontal-center-section, and vertical-outlet flow.

12. Accessories: Refer to Plumbing design drawings

    a. Valves: Outside-screw and yoke-gate type with flanged ends on inlet and outlet.
    b. Air-Gap Fitting: ASME A112.1.2, matching backflow-preventer connection.
    c. Bypass: With displacement-type water meter, shutoff valves, and reduced-pressure backflow preventer.

G. Double-Check, Detector-Assembly Backflow Preventers:

1. Manufacturers: Subject to compliance with requirements, available manufacturers offering products that may be incorporated into the Work include, but are not limited to the following:

    a. Apollo Flow Controls; Conbraco Industries, Inc.
    b. Beeco by Mifab.
    c. FEBCO; A WATTS Brand.
    d. WATTS.
    e. Zurn Industries, LLC.

2. Standard: ASSE 1048 and is FM Global approved or UL listed.
3. Operation: Continuous-pressure applications.
4. Pressure Loss: 5 psig maximum, through middle third of flow range.
5. Size: Refer to Plumbing design drawings.
6. Design Flow Rate: Refer to Plumbing design drawings.
7. Selected Unit Flow Range Limits: Refer to Plumbing design drawings.
8. Pressure Loss at Design Flow Rate: Refer to Plumbing design drawings.
9. Body: Cast iron or steel with interior lining that complies with AWWA C550 or that is FDA approvedor Stainless steel.
10. End Connections: Flanged.
11. Configuration: Designed for horizontal, straight-throughor vertical-inlet, horizontal-center-section, and vertical-outlet flow.
12. Accessories:

    a. Valves: Outside-screw and yoke-gate type with flanged ends on inlet and outlet.
    b. Bypass: With displacement-type water meter, shutoff valves, and reduced-pressure backflow preventer.

H. Hose-Connection Backflow Preventers:

1. Manufacturers: Subject to compliance with requirements, available manufacturers offering products that may be incorporated into the Work include, but are not limited to the following:

    a. Apollo Flow Controls; Conbraco Industries, Inc.
    b. WATTS.
    c. Woodford Manufacturing Company.

2. Standard: ASSE 1052.
3. Operation: Up to 10-foot head of water back pressure.
4. Inlet Size: NPS 1/2 or NPS 3/4.

5. Outlet Size: Garden-hose thread complying with ASME B1.20.7.
6. Capacity: At least 3-gpm flow.

I. Backflow-Preventer Test Kits:

1. Manufacturers: Subject to compliance with requirements, provide products by one of the following:

   a. Apollo Flow Controls; Conbraco Industries, Inc.
   b. FEBCO; A WATTS Brand.
   c. WATTS.
   d. Zurn Industries, LLC.

2. Description: Factory calibrated, with gages, fittings, hoses, and carrying case with test-procedure instructions.

2.5 WATER PRESSURE-REDUCING VALVES

A. Water Regulators:

1. Manufacturers: Subject to compliance with requirements, available manufacturers offering products that may be incorporated into the Work include, but are not limited to the following:

   a. Apollo Flow Controls; Conbraco Industries, Inc.
   b. Beeco by Mifab.
   c. Cash Acme; a division of Reliance Worldwide Corporation.
   d. WATTS.
   e. Zurn Industries, LLC.

2. Standard: ASSE 1003.
3. Pressure Rating: Initial working pressure of 150 psig.
4. Size: Refer to Plumbing design drawings .
5. Design Flow Rate: Refer to Plumbing design drawings.
6. Design Inlet Pressure: Refer to Plumbing design drawings.
7. Design Outlet Pressure Setting: Refer to Plumbing design drawings.
8. Body: Bronze with chrome-plated finish for NPS 2 and smaller; cast iron with interior lining that complies with AWWA C550 or that is FDA approved for NPS 2-1/2 and NPS 3.
9. Valves for Booster Heater Water Supply: Include integral bypass.
10. End Connections: Threaded for NPS 2 and smaller; flanged for NPS 2-1/2 and NPS 3.

B. Water-Control Valves:

1. Manufacturers: Subject to compliance with requirements, available manufacturers offering products that may be incorporated into the Work include, but are not limited to the following:

   a. Apollo Flow Controls; Conbraco Industries, Inc.
   b. CLA-VAL Automatic Control Valves.

c. WATTS.
d. Zurn Industries, LLC.

2. Description: Pilot-operated, diaphragm-type, single-seated, main water-control valve.

3. Pressure Rating: Initial working pressure of 150 psig minimum with AWWA C550 or FDA-approved, interior epoxy coating. Include small pilot-control valve, restrictor device, specialty fittings, and sensor piping.

4. Main Valve Body: Cast- or ductile-iron body with AWWA C550 or FDA-approved, interior epoxy coating; or stainless-steel body.

   a. Size: Refer to Plumbing design drawings NPS.
   b. Pattern: Angleor Globe-valve design.
   c. Trim: Stainless steel.

5. Design Flow: Refer to Plumbing design drawings.
6. Design Inlet Pressure: Refer to Plumbing design drawings.
7. Design Outlet Pressure Setting: Refer to Plumbing design drawings.
8. End Connections: Threaded for NPS 2 and smaller; flanged for NPS 2-1/2 and larger.

2.6 AUTOMATIC WATER SHUTOFF VALVES

A. Manufacturers: Subject to compliance with requirements, available manufacturers offering products that may be incorporated into the Work include, but are not limited to the following:

   1. DynaQuip Controls.
   2. FloLogic, Inc.
   3. OnSite PRO Inc.
   4. QMI Manufacturing Inc.

B. Standards: NSF 61 and NSF 372.

C. Shutoff Control Ball Valve:

   1. Size: NPS 1/2, NPS 3/4, NPS 1, NPS 1-1/4, NPS 1-1/2or NPS 2.
   2. Design Flow Rate: Refer to Plumbing design drawings.
   3. Design Inlet Pressure: Refer to Plumbing design drawings.
   4. Control Valve: Two-piece, full-port brass ball valve, MSS SP-110.

      a. End Connections: Threaded, female.
      b. Seats: PTFE.
      c. O-Rings: FKM.
      d. Stem: Low lead brass. Blowout proof.
      e. CWP Rating: 600 psig.

   5. Manual override control turn-knob for emergency operation of the valve.

D. Shutoff Control Butterfly Valve:

1. Size: NPS 2-1/2, NPS 3or NPS 4.
2. Compliance: MSS SP-67.
3. Full-port, epoxy-coated, ductile-iron lug body.
4. Seat: EPDM, minus 30 deg F to plus 250 deg F.
5. Face-to-Face Flange: ASME B16.5 flanges.
6. Disc Design: Floating stainless-steel dual shaft.
7. Disc Material: Iron nylon 11or Stainless steel.
8. Locating Pin: Carbon steel.
9. Bushings: PTFE.
10. O-Rings: EPDM.
11. Ten position stop.
12. Manual override control turn-knob for emergency operation of the valve.

E. Clothes Washer Shutoff Control Valve: Two-way, four-port, low-zinc bronze alloy valve.

1. End Connections: Male hose connections, NPS 3/4.
2. Pressure Rating: 400 psi at 32 to 150 deg F.
3. Maximum Test Pressure: 1200 psig.
4. Stem Travel: 0.16 inch.
5. Maximum Temperature: 250 deg F.
6. Valve Stem: Burnished Type 303 stainless steel.
7. Valve Stem Packing: Double EPDM.
8. Valve Seat: Integral bronze.
9. Valve Disc and Plunger: EPDM.
10. Valve Spring: Stainless steel.
11. Hoses: Two, 9-inch steel braided.
12. Hose End Connections: One straight and one 90-degree elbow connection; both hoses.

F. Clothes Washer Shutoff Control Valve Actuator: Two position, drive closed, spring open.

1. Housing: High-temperature composite glass-filled nylon.
2. Connection to Valve: NPT female brass ring.
3. Electric Motor: Reversible, brushless, and synchronism, maintains constant control speed to keep the cycle time constant. Maximum stem output is force balance controlled with electronic shutoff when end travel is detected in both directions.
4. Maximum Working Force: 48 lbf.
5. Power Requirements:

    a. Input Voltage: 24 V ac.
    b. Frequency: 60or 50 Hz.
    c. Current: 0.045 A.
    d. Power: 1 VA.

6. Power Supply: 120-V ac to 24-V ac transformer with cord and plug.
7. Working Time: 90 seconds.
8. Duty Rating: 100 percent.
9. Travel: 0.16 inch.
10. Position Indicator: Standard.
11. Working Temperature: 40 to 120 deg F.
12. Conform to CE and ROHS requirements.

G. Water Main Shutoff Valve Actuator: Motor operated, with or without gears, electric and electronic. Capable of closing valve against inlet pressure. Direct mount, two way; fails open/open or closed/closed.

1. Actuator Torque: 133or 266 in-lbf.
2. Power Requirements:

    a. Input Voltage: 12or 24 V dc.
    b. Frequency: 60or 50 Hz.
    c. Current: 2 A.
    d. Power: 15or 24 VA.

3. Power Supply: 120-V ac to 12or 24-V dc transformer with cord and plug.
4. Working Time: 8or 10 seconds.
5. Torque Limiter: STD.
6. Duty Rating: 50or 75 percent.
7. Protection: IP65or IP67.
8. Rotation: 90or 180 degrees.
9. Manual Intervention: Allowed.
10. Position Indicator: Standard.
11. Working Temperature: Minus 4 deg F to plus 131 deg F.

H. Domestic Water Heater Shutoff Valve Actuator: Motor operated, with or without gears, electric and electronic. Capable of closing valve against inlet pressure. Direct mount, two way; fails open/open or close/close.

1. Power Requirements:

    a. Input Voltage: 24 V ac.
    b. Frequency: 60or 50 Hz.
    c. Current: 0.6 A.
    d. Power: 15 VA.

2. Power Supply: 120-V ac to 24-V ac transformer with cord and plug.
3. Working Time: 45 seconds.
4. Rotation: 90 degrees.
5. Manual Intervention: Allowed.
6. Position Indicator: LED for closed position.
7. Working Temperature: 0 to 100 deg F.
8. Audible Alarm: 83 dB.

I. Actuator Enclosure: Suitable for ambient conditions encountered by application.

1. NEMA 250, Type 2 for indoor and protected applications.
2. Material: Self-extinguishing class techno-polymer.
3. .

J. Wireless Leak Detection Receiver System:

1. Onboard Battery Backup: 48 hours of protection. Valve to close prior to backup failure.
2. LED Indicators: Wireless signal strength, communication loss, water fault, low temperature fault, and low battery.
3. Output Contacts: Interface with home security or building automation system, cellular text notification service, or auto dialer accessories.
4. FCC Approved Wireless Communication System: Between devices; sensors, repeaters, and receivers:

    a. Proprietary 900-MHz wireless communication platform ensures system operation without Wi-Fi dependence or other communication platforms, subject to power and random service outages.
    b. Automatic wireless communication testing and positive confirmation ensure system devices remain active and working correctly. Automatic fault notification for lost communication or missing device.

5. Power Supply: 120 V acor 9-V dc battery.
6. Dual Function Wireless Sensors: 2. Valve closes if temperature falls below 45 deg F.

    a. Wireless Signal Range: 100 feet between sensors and receiver.
    b. Custom range finding feature.
    c. LED Indicators: Wireless signal strength, communication loss, water fault, low temperature, and low battery.

7. Self-monitoring enabled system; faults for lost communication between receiver and sensor(s).
8. Closed-Loop RF System: System remains active even when power and Wi-Fi signals are lost.

K. Wired Leak Detection System: Local water sensor.

1. Power Supply: Class II transformer with cord and plug, 120 V ac, UL listed.

    a. Power Cord Length: 12 feet.

2. Control Panel: LED power and LED valves indicator.
3. Alarms: Audible alarm, with external output.
4. Wired Sensors:

    a. Quantity Per Receiver: 1to 6.
    b. Cable Length: 8, 25, 50or 100 feet.

5. Sensor Elevation: Elevated 1/2 inches above condensate drain pan.

L. Accessories:

1. Water Flow Sensors: Pipe-mounted to detect water flow.
2. Rope Sensor: Absorbent water sensing rope constructed from twisted metal conductor wires insulated from one another and surrounded by polyethylene mesh braid jacket. Connect up to 100 feet (10 sections) of sensor rope to a single receiver.
3. Electrical Plug Interrupter: Plugs into standard 120-V ac wall outlet.

4. Gas Flow Interrupter: ECO Connector with female spade connectors. Factory prewired, 8 feet.
5. Gas Interface Cable: Interface cable with male and female connectors.
6. Step-Down Transformer: 120, 208or 240 V ac to 24 V ac with mounting plate, 12-foot plenum wire to power, and 8-foot plenum wire to sensor.
7. Liquid Level Sensors: Monitor fluid levels in addition to detecting plumbing leaks.
8. Auto Dialer: Send and receive automatic alerts when a fault condition occurs. Standard output contacts trigger up to nine predetermined telephone number calls.

    a. Prerecord message for future playback.
    b. 10-second recordable message.
    c. Built-in tamper switch.
    d. DC adaptor with battery backup.
    e. Programmable as a silent (dialer only) or audible (siren and dialer) alarm.
    f. Easy "Stop Call Sequence" - push "#" on phone to acknowledge the alarm and stop the dialing sequence.

9. Cellular Text Notification System.

    a. Event SMS text notification to up to three cell phones.
    b. Battery backup, four (4) AA batteries.
    c. 12-foot interface cable to leak detection system.
    d. Customized messaging.
    e. Wireless network service provider.

10. Cable Adder: 10, 25, 50or 100 feet in length.
11. Wireless Signal Repeater: Boosts signal performance between wireless sensors and receiver.

    a. Push-button pairing and unpairing, into and out of the network.
    b. Visual indication of wireless signal strength, low battery, and lost communication.
    c. Standard wall outlet, 120 V ac, power.
    d. Battery backup: Two (2) AA batteries for battery backup to maintain system integrity during a power outage.

12. Wireless Water Switch: Allows manual override or wireless system functionality and closes the valve to shut off water flow.
13. Hard-Wired Water Switch: Allows manual override or wireless system functionality and closes the valve to shut off water flow.

2.7 TEMPERATURE-ACTUATED, WATER MIXING VALVES

A. Water-Temperature Limiting Devices:

1. Manufacturers: Subject to compliance with requirements, available manufacturers offering products that may be incorporated into the Work include, but are not limited to the following:

    a. Apollo Flow Controls; Conbraco Industries, Inc.

b. Caleffi.
c. Leonard Valve Company.
d. POWERS; A WATTS Brand.
e. Symmons Industries, Inc.

2. Standard: ASSE 1017.
3. Pressure Rating: 125 psig.
4. Type: Thermostatically controlled, water mixing valve.
5. Material: Bronze body with corrosion-resistant interior components.
6. Connections: Threaded union inlets and outlet.
7. Accessories: Check stops on hot- and cold-water supplies, and adjustable, temperature-control handle.
8. Tempered-Water Setting: Refer to Plumbing design drawings.
9. Tempered-Water Design Flow Rate: Refer to Plumbing design drawings.
10. Valve Finish: Chrome platedor Rough bronze.

B. Primary, Thermostatic, Water Mixing Valves:

1. Manufacturers: Subject to compliance with requirements, available manufacturers offering products that may be incorporated into the Work include, but are not limited to the following:

a. Lawler Manufacturing Company, Inc.
b. Leonard Valve Company.
c. POWERS; A WATTS Brand.
d. Symmons Industries, Inc.
e. Caleffi.

2. Standard: ASSE 1017.
3. Pressure Rating: 125 psig minimum unless otherwise indicated.
4. Type: Exposed-mounted or Cabinet-type, thermostatically controlled, water mixing valve.
5. Material: Bronze body with corrosion-resistant interior components.
6. Connections: Threaded union inlets and outlet.
7. Accessories: Manual temperature control, check stops on hot- and cold-water supplies, and adjustable, temperature-control handle.
8. Tempered-Water Setting: Refer to Plumbing design drawings.
9. Tempered-Water Design Flow Rate: Refer to Plumbing design drawings.
10. Selected Valve Flow Rate at 45-psig Pressure Drop: Refer to Plumbing design drawings.
11. Pressure Drop at Design Flow Rate: Refer to Plumbing design drawings.
12. Valve Finish: Polished, chrome plated or Rough bronze.
13. Piping Finish: Chrome plated or Copper.
14. Cabinet: Factory fabricated, stainless steel, for recessed or surface mounting and with hinged, stainless-steel door.

C. Individual-Fixture, Water Tempering Valves:

1. Manufacturers: Subject to compliance with requirements, available manufacturers offering products that may be incorporated into the Work include, but are not limited to the following:

a. Apollo Flow Controls; Conbraco Industries, Inc.
b. Caleffi.
c. Lawler Manufacturing Company, Inc.
d. Leonard Valve Company.
e. POWERS; A WATTS Brand.
f. WATTS.

2. Standard: ASSE 1016, thermostatically controlled, water tempering valve.
3. Pressure Rating: 125 psig minimum unless otherwise indicated.
4. Body: Bronze body with corrosion-resistant interior components.
5. Temperature Control: Adjustable.
6. Inlets and Outlet: Threaded.
7. Finish: Rough or chrome-plated bronze.
8. Tempered-Water Setting: Refer to Plumbing design drawings.
9. Tempered-Water Design Flow Rate: Refer to Plumbing design drawings.

D. Primary Water Tempering Valves:

1. Manufacturers: Subject to compliance with requirements, available manufacturers offering products that may be incorporated into the Work include, but are not limited to the following:

a. Heat-Timer Corporation.
b. Caleffi.
c. Holby Valve Inc.
d. Uponor.

2. Standard: ASSE 1017, thermostatically controlled, water tempering valve, listed as tempering valve.
3. Pressure Rating: 125 psig minimum unless otherwise indicated.
4. Body: Bronze.
5. Temperature Control: Manual.
6. Inlets and Outlet: Threaded.
7. Selected Primary Water Tempering Valve Size: Refer to Plumbing design drawings.
8. Tempered-Water Setting: Refer to Plumbing design drawings.
9. Tempered-Water Design Flow Rate: Refer to Plumbing design drawings.
10. Pressure Drop at Design Flow Rate: Refer to Plumbing design drawings.
11. Tempered-Water Outlet Size: Refer to Plumbing design drawings.
12. Cold-Water Inlet Size: Refer to Plumbing design drawings.
13. Hot-Water Inlet Size: Refer to Plumbing design drawings.
14. Valve Finish: Rough bronze.

2.8 STRAINERS FOR DOMESTIC WATER PIPING

A. Y-Pattern Strainers:

1. Pressure Rating: 125 psig minimum unless otherwise indicated.
2. Body: Bronze for NPS 2 and smaller; cast iron with interior lining that complies with AWWA C550 or that is FDA approved, epoxy coated and for NPS 2-1/2 and larger.

3. End Connections: Threaded for NPS 2 and smaller; flanged for NPS 2-1/2 and larger.
4. Screen: Stainless steel with round perforations unless otherwise indicated.
5. Perforation Size:

    a. Strainers NPS 2 and Smaller: 0.020, 0.033or 0.062 inch.
    b. Strainers NPS 2-1/2 to NPS 4: 0.045, 0.062or 0.125 inch.
    c. Strainers NPS 5 and Larger: 0.10, 0.125or 0.25 inch.

6. Drain: Pipe plugand Factory-installed, hose-end drain valve.

2.9 OUTLET BOXES

A. Clothes Washer Outlet Boxes:

1. Manufacturers: Subject to compliance with requirements, available manufacturers offering products that may be incorporated into the Work include, but are not limited to the following:

    a. Guy Gray Manufacturing Co., Inc.
    b. IPS Corporation.
    c. LSP Products Group, Inc.
    d. Oatey.

2. Mounting: Recessed.
3. Material and Finish: Enameled-steel, epoxy-painted-steelor Stainless-steel box and faceplate.
4. Faucet: Combination valved fitting or separate hot- and cold-water valved fittings complying with ASME A112.18.1. Include garden-hose thread complying with ASME B1.20.7 on outlets.
5. Supply Shutoff Fittings: NPS 1/2 gate, globe, or ball valves and NPS 1/2 copper, water tubing.
6. Drain: NPS 1-1/2or NPS 2 standpipe and P-trap for direct waste connection to drainage piping.
7. Inlet Hoses: Two 60-inch-long, rubber household clothes washer inlet hoses with female, garden-hose-thread couplings. Include rubber washers.
8. Drain Hose: One 48-inch-long, rubber household clothes washer drain hose with hooked end.

B. Icemaker Outlet Boxes:

1. Manufacturers: Subject to compliance with requirements, available manufacturers offering products that may be incorporated into the Work include, but are not limited to the following:

    a. IPS Corporation.
    b. LSP Products Group, Inc.
    c. Oatey.
    d. Plastic Oddities.

2. Mounting: Recessed.
3. Material and Finish: Enameled-steel, epoxy-painted-steel Stainless-steel box and faceplate.
4. Faucet: Valved fitting complying with ASME A112.18.1. Include NPS 1/2 or smaller copper tube outlet.
5. Supply Shutoff Fitting: NPS 1/2 gate, globe, or ball valve and NPS 1/2 copper, water tubing.

2.10 HOSE BIBBS

A. Hose Bibbs:

1. Manufacturers: Subject to compliance with requirements, available manufacturers offering products that may be incorporated into the Work include, but are not limited to the following:

   a. Jay R. Smith Mfg. Co.
   b. MIFAB, Inc.
   c. WATTS.
   d. Woodford Manufacturing Company.
   e. Acorn Manufacturing

2. Standard: ASME A112.18.1 for sediment faucets.
3. Body Material: Bronze.
4. Seat: Bronze, replaceable.
5. Supply Connections: NPS 1/2 or NPS 3/4 threaded or solder-joint inlet.
6. Outlet Connection: Garden-hose thread complying with ASME B1.20.7.
7. Pressure Rating: 125 psig.
8. Vacuum Breaker: Integral or field-installation, nonremovable, drainable, hose-connection vacuum breaker complying with ASSE 1011.
9. Finish for Equipment Rooms: Rough bronze, or chrome or nickel plated.
10. Finish for Service Areas: Rough bronze, Chrome or nickel plated.
11. Finish for Finished Rooms: Chrome or nickel plated.
12. Operation for Equipment Rooms: Wheel handle or operating key.
13. Operation for Service Areas: Wheel handleor Operating key.
14. Operation for Finished Rooms: Wheel handleor Operating key.
15. Include operating key with each operating-key hose bibb.
16. Include integral wall flange with each chrome- or nickel-plated hose bibb.

2.11 DRAIN VALVES

A. Ball-Valve-Type, Hose-End Drain Valves:

1. Standard: MSS SP-110 for standard-port, two-piece ball valves.
2. Pressure Rating: 400-psig minimum CWP.
3. Size: NPS 3/4.
4. Body: Copper alloy.
5. Ball: Chrome-plated brass.

6. Seats and Seals: Replaceable.
7. Handle: Vinyl-covered steel.
8. Inlet: Threaded or solder joint.
9. Outlet: Threaded, short nipple with garden-hose thread complying with ASME B1.20.7 and cap with brass chain.

B. Gate-Valve-Type, Hose-End Drain Valves:

1. Standard: MSS SP-80 for gate valves.
2. Pressure Rating: Class 125.
3. Size: NPS 3/4.
4. Body: ASTM B62 bronze.
5. Inlet: NPS 3/4 threaded or solder joint.
6. Outlet: Garden-hose thread complying with ASME B1.20.7 and cap with brass chain.

C. Stop-and-Waste Drain Valves:

1. Standard: MSS SP-110 for ball valves or MSS SP-80 for gate valves.
2. Pressure Rating: 200-psig minimum CWP or Class 125.
3. Size: NPS 3/4.
4. Body: Copper alloy or ASTM B62 bronze.
5. Drain: NPS 1/8 side outlet with cap.

2.12 WATER-HAMMER ARRESTERS

A. Water-Hammer Arresters:

1. Manufacturers: Subject to compliance with requirements, available manufacturers offering products that may be incorporated into the Work include, but are not limited to the following:

   a. MIFAB, Inc.
   b. Precision Plumbing Products.
   c. Sioux Chief Manufacturing Company, Inc.
   d. WATTS.

2. Standard: ASSE 1010 or PDI-WH 201.
3. Type: Metal bellowsor Copper tube with piston.
4. Size: ASSE 1010, Sizes AA and A through F, or PDI-WH 201, Sizes A through F.

2.13 TRAP-SEAL PRIMER DEVICE

A. Supply-Type, Trap-Seal Primer Device:

1. Manufacturers: Subject to compliance with requirements, available manufacturers offering products that may be incorporated into the Work include, but are not limited to the following:

a. Jay R. Smith Mfg. Co.
b. MIFAB, Inc.
c. Precision Plumbing Products.

2. Standard: ASSE 1018.
3. Pressure Rating: 125 psig minimum.
4. Body: Bronze.
5. Inlet and Outlet Connections: NPS 1/2 threaded, union, or solder joint.
6. Gravity Drain Outlet Connection: NPS 1/2 threaded or solder joint.
7. Finish: Chrome plated, or rough bronze for units used with pipe or tube that is not chrome finished.

B. Drainage-Type, Trap-Seal Primer Device:

1. Manufacturers: Subject to compliance with requirements, available manufacturers offering products that may be incorporated into the Work include, but are not limited to the following:

a. Jay R. Smith Mfg. Co.

2. Standard: ASSE 1044, lavatory P-trap with NPS 3/8 minimum, trap makeup connection.
3. Size: NPS 1-1/4 minimum.
4. Material: Chrome-plated, cast brass.

2.14 TRAP-SEAL PRIMER SYSTEMS

A. Trap-Seal Primer Systems:

1. Manufacturers: Subject to compliance with requirements, available manufacturers offering products that may be incorporated into the Work include, but are not limited to the following:

a. Precision Plumbing Products.
b. Zurn Industries, LLC.
c. Mifab MI-100 series.

2. Standard: ASSE 1044.
3. Piping: NPS 3/4, ASTM B88, Type L; copper, water tubing.
4. Cabinet: Recessedor Surface-mounted steel box with stainless-steel cover.
5. Electric Controls: 24-hour timer, solenoid valve, and manual switch for 120-V ac power.

a. Electrical Components, Devices, and Accessories: Listed and labeled as defined in NFPA 70, by a qualified testing agency, and marked for intended location and application.

6. Vacuum Breaker: ASSE 1001.
7. Number Outlets: Refer to Plumbing design drawings.
8. Size Outlets: NPS 1/2or NPS 5/8.

2.15 FLEXIBLE CONNECTORS

A. Manufacturers: Subject to compliance with requirements, available manufacturers offering products that may be incorporated into the Work include, but are not limited to the following:
   1. Flex-Hose Co., Inc.
   2. Flex-Weld, Inc.
   3. Metraflex Company (The).

B. Bronze-Hose Flexible Connectors: Corrugated-bronze tubing with bronze wire-braid covering and ends brazed to inner tubing.

   1. Working-Pressure Rating: Minimum 200 psigor 250 psig.
   2. End Connections NPS 2 and Smaller: Threaded copper pipe or plain-end copper tube.
   3. End Connections NPS 2-1/2 and Larger: Flanged copper alloy.

C. Stainless-Steel-Hose Flexible Connectors: Corrugated-stainless-steel tubing with stainless-steel wire-braid covering and ends welded to inner tubing.

   1. Working-Pressure Rating: Minimum 200 psigor 250 psig.
   2. End Connections NPS 2 and Smaller: Threaded steel-pipe nipple.
   3. End Connections NPS 2-1/2 and Larger: Flanged steel nipple.

2.16 WATER METERS

A. Displacement-Type Water Meters:

   1. Manufacturers: Subject to compliance with requirements, available manufacturers offering products that may be incorporated into the Work include, but are not limited to the following:

      a. AALIANT.
      b. ABB.
      c. Mueller Co.
      d. Sensus.

   2. Standard: AWWA C700.
   3. Pressure Rating: 150-psig working pressure.
   4. Body Design: Nutating disc; totalization meter.
   5. Registration: In gallons or cubic feet as required by utility company.
   6. Case: Bronze.
   7. End Connections: Threaded.

B. Turbine-Type Water Meters:

   1. Manufacturers: Subject to compliance with requirements, available manufacturers offering products that may be incorporated into the Work include, but are not limited to the following:

      a. Badger Industries, Inc.

b. Master Meter, Inc.
c. Sensus.

2. Standard: AWWA C701.
3. Pressure Rating: 150 psig working pressure.
4. Body Design: Turbine; totalization meter.
5. Registration: In gallons or cubic feet as required by utility company.
6. Case: Bronze.
7. End Connections for Meters NPS 2 and Smaller: Threaded.
8. End Connections for Meters NPS 2-1/2 and Larger: Flanged.

C. Compound-Type Water Meters:

1. Manufacturers: Subject to compliance with requirements, available manufacturers offering products that may be incorporated into the Work include, but are not limited to the following:

a. Badger Industries, Inc.
b. Mueller Co.
c. Sensus.

2. Standard: AWWA C702.
3. Pressure Rating: 150-psig working pressure.
4. Body Design: With integral mainline and bypass meters; totalization meter.
5. Registration: In gallons or cubic feet as required by utility company.
6. Case: Bronze.
7. Pipe Connections: Flanged.

D. Remote Registration System: Encoder type complying with AWWA C707; modified with signal-transmitting assembly, low-voltage connecting wiring, and remote register assembly as required by utility company.

PART 3 - EXECUTION

3.1 INSTALLATION

A. Backflow Preventers: Install backflow preventers in each water supply to mechanical equipment and systems and to other equipment and water systems that may be sources of contamination. Comply with authorities having jurisdiction.

1. Locate backflow preventers in same room as connected equipment or system.
2. Install drain for backflow preventers with atmospheric-vent drain connection with air-gap fitting, fixed air-gap fitting, or equivalent positive pipe separation of at least two pipe diameters in drain piping and pipe-to-floor drain. Locate air-gap device attached to or under backflow preventer. Simple air breaks are unacceptable for this application.
3. Do not install bypass piping around backflow preventers.

B. Water Regulators: Install with inlet and outlet shutoff valves and bypass with memory-stop balancing valve. Install pressure gages on inlet and outlet.

C. Water Control Valves: Install with inlet and outlet shutoff valves and bypass with globe valve. Install pressure gages on inlet and outlet.

D. Automatic Water Shutoff Valves: Test for signal strength before valve installation. Install automatic shutoff valve downstream from main domestic water shutoff valve and downstream from fire sprinkler system supply. Install valve controller is an accessible location with sensors in areas where water is likely to accumulate.

E. Temperature-Actuated, Water Mixing Valves: Install with check stops or shutoff valves on inlets and with shutoff valve on outlet.

1. Install cabinet-type units recessed in or surface mounted on wall as specified.

F. Y-Pattern Strainers: For water, install on supply side of each control valve, water pressure-reducing valve, solenoid valve and/or pump.

G. Outlet Boxes: Install boxes recessed in wall or surface mounted on wall. Install 2-by-4-inch fire-retardant-treated-wood blocking, wall reinforcement between studs. Comply with requirements for fire-retardant-treated-wood blocking in Section 061000 "Rough Carpentry."

H. Water-Hammer Arresters: Install in water piping according to PDI-WH 201.

I. Supply-Type, Trap-Seal Primer Device: Install with outlet piping pitched down toward drain trap a minimum of 1 percent, and connect to floor-drain body, trap, or inlet fitting. Adjust valve for proper flow.

J. Drainage-Type, Trap-Seal Primer Device: Install as lavatory trap with outlet piping pitched down toward drain trap a minimum of 1 percent, and connect to floor-drain body, trap, or inlet fitting.

K. Trap-Seal Primer Systems: Install with outlet piping pitched down toward drain trap a minimum of 1 percent, and connect to floor-drain body, trap, or inlet fitting. Adjust system for proper flow.

3.2 CONNECTIONS

A. Drawings indicate general arrangement of piping, fittings, and specialties.

B. When installing piping specialties adjacent to equipment and machines, allow space for service and maintenance.

C. Comply with requirements for grounding equipment in Section 260526 "Grounding and Bonding for Electrical Systems."

3.3 IDENTIFICATION

A. Plastic Labels for Equipment: Install engraved plastic-laminate equipment nameplate or sign on or near each of the following:

1. Pressure vacuum breakers.
2. Intermediate atmospheric-vent backflow preventers.
3. Reduced-pressure-principle backflow preventers.
4. Double-check, backflow-prevention assemblies.
5. Dual-check-valve backflow preventers.
6. Reduced-pressure-detector, fire-protection, backflow-preventer assemblies.
7. Double-check, detector-assembly backflow preventers.
8. Water pressure-reducing valves.
9. Automatic water shutoff valves.
10. Primary, thermostatic, water mixing valves.
11. Manifold, thermostatic, water mixing-valve assemblies.
12. Primary water tempering valves.
13. Outlet boxes.
14. Supply-type, trap-seal primer valves.
15. Trap-seal primer systems.

B. Distinguish among multiple units, inform operator of operational requirements, indicate safety and emergency precautions, and warn of hazards and improper operations, in addition to identifying unit. Nameplates and signs are specified in Section 220553 "Identification for Plumbing Piping and Equipment."

3.4 FIELD QUALITY CONTROL

A. Perform the following tests and inspections:

1. Test each pressure vacuum breaker, reduced-pressure-principle backflow preventer, double-check, backflow-prevention assembly and/or double-check, detector-assembly backflow preventer according to authorities having jurisdiction and the device's reference standard.

B. Domestic water piping specialties will be considered defective if they do not pass tests and inspections.

C. Prepare test and inspection reports.

3.5 ADJUSTING

A. Set field-adjustable pressure set points of water pressure-reducing valves.

B. Set field-adjustable flow set points of balancing valves.

C. Set field-adjustable temperature set points of temperature-actuated, water mixing valves.

END OF SECTION 221119

SECTION 221123.21 - INLINE, DOMESTIC-WATER PUMPS

PART 1 - GENERAL

1.1 RELATED DOCUMENTS

A. Drawings and general provisions of the Contract, including General and Supplementary Conditions and Division 01 Specification Sections, apply to this Section.

1.2 SUMMARY

A. Section Includes:

1. In-line, sealless centrifugal pumps.
2. Horizontally mounted, in-line, separately coupled centrifugal pumps.
3. Horizontally mounted, in-line, close-coupled centrifugal pumps.
4. Vertically mounted, in-line, close-coupled centrifugal pumps.

B. Related Requirements:

1. Section 221123.13 "Domestic-Water Packaged Booster Pumps" for booster systems.
2. Section 331113 "Potable Water Supply Wells" for well pumps.

1.3 ACTION SUBMITTALS

A. Submittals shall be formatted per Section 220000 “General Plumbing Requirements”. The manufacturer shall resubmit the specification section showing compliance with each respective paragraphs and specified items and features in that particular specification section. All **exceptions** shall be clearly identified by referencing respective paragraph and other requirements. Next to each specification item, indicate the following:

1. “No Exception Taken”.
2. “Exception”. All exceptions shall be clearly identified by referencing respective paragraph and other requirements along with proposed alternative.

B. Product Data: For each type of product. Include construction materials, rated capacities, certified performance curves with operating points plotted on curves, operating characteristics, electrical characteristics, and furnished specialties and accessories.

1.4 INFORMATIONAL SUBMITTALS

A. Coordination Drawings: Detail pumps and adjacent equipment. Show support locations, type of support, weight on each support, required clearances, and other details, drawn to scale, on which the following items are shown and coordinated with each other, using input from installers of the items involved:

1. Structural members to which pumps will be attached.
2. Size and location of initial access modules for acoustical tile.

B. Seismic Qualification Data: Certificates, for inline, domestic-water pumps, accessories, and components, from manufacturer.

1. Basis for Certification: Indicate whether withstand certification is based on actual test of assembled components or on calculation.
2. Dimensioned Outline Drawings of Equipment Unit: Identify center of gravity and locate and describe mounting and anchorage provisions.
3. Detailed description of equipment anchorage devices on which the certification is based and their installation requirements.

C. Field quality-control reports.

1.5 CLOSEOUT SUBMITTALS

A. Operation and Maintenance Data: For inline, domestic-water pumps to include in operation and maintenance manuals.

1.6 DELIVERY, STORAGE, AND HANDLING

A. Retain shipping flange protective covers and protective coatings during storage.

B. Protect bearings and couplings against damage.

C. Comply with pump manufacturer's written instructions for handling.

PART 2 - PRODUCTS

2.1 PERFORMANCE REQUIREMENTS

A. Electrical Components, Devices, and Accessories: Listed and labeled as defined in NFPA 70, by a qualified testing agency, and marked for intended location and application.

B. UL Compliance: UL 778 for motor-operated water pumps.

C. Drinking Water System Components - Health Effects and Drinking Water System Components - Lead Content Compliance: NSF 61 and NSF 372.

D. Retain "Seismic Performance" Paragraph below with "Seismic Qualification Data" Paragraph in "Informational Submittals" Article for projects requiring seismic design. Delete paragraph if performance requirements are indicated on Drawings. Model building codes and ASCE/SEI 7 establish criteria for buildings subject to earthquake motions. Coordinate requirements with structural engineer.

E. Seismic Performance: Inline, domestic-water pumps shall withstand the effects of earthquake motions determined according to ASCE/SEI 7.

1. The term "withstand" means "the unit will remain in place without separation of any parts when subjected to the seismic forces specified and the unit will be fully operational after the seismic event."
2. Component Importance Factor: 1.0.

2.2 IN-LINE, SEALLESS CENTRIFUGAL PUMPS

A. Description: Factory-assembled and -tested, in-line, close-coupled, canned-motor, sealless, overhung-impeller centrifugal pumps.

B. Manufacturers: Subject to compliance with requirements, provide products by one of the following:

1. Grundfos Pumps Corp.
2. WILO USA LLC - WILO Canada Inc.
3. Bell & Gossett

C. Capacities and Characteristics: Refer to Drawings.

D. Pump Construction:

1. Pump and Motor Assembly: Hermetically sealed, replaceable-cartridge type with motor and impeller on common shaft and designed for installation with pump and motor shaft horizontal.
2. Minimum Working Pressure: 1.3 psi.
3. Maximum Continuous Operating Temperature: 220 deg F.
4. Casing: Cast iron, with threaded or companion-flange connections.
5. Impeller: stainless steel.
6. Motor: Three speed or Variable.

2.3 MOTORS

A. Comply with NEMA designation, temperature rating, service factor, enclosure type, and efficiency requirements for motors specified in Section 220513 "Common Motor Requirements for Plumbing Equipment."

1. Motor Sizes: Minimum size as indicated. If not indicated, large enough so driven load will not require motor to operate in service factor range above 1.0.

2.4 CONTROLS

A. Thermostats: Electric; adjustable for control of hot-water circulation pump.

1. Type: Water-immersion temperature sensor, for installation in piping.

2. Range: 65 to 200 deg F.
3. Enclosure: NEMA 250, Type 4X.
4. Operation of Pump: On or off.
5. Transformer: Provide if required.
6. Power Requirement: 120 V ac.
7. Settings: Start pump at 110 deg F and stop pump at 120 deg F.

B. Timers: Electric, for control of hot-water circulation pump.

1. Type: Programmable, seven-day clock with manual override on-off switch.
2. Enclosure: NEMA 250, Type 1, suitable for wall mounting.
3. Operation of Pump: On or off.
4. Transformer: Provide if required.
5. Power Requirement: 120 V ac.
6. Programmable Sequence of Operation: Up to two on-off cycles each day for seven days.

C. Time-Delay Relays: Electric, for control of hot-water circulation pump between water heater and connected hot-water storage tank.

1. Type: Adjustable time-delay relay.
2. Range: Up to five minutes.
3. Setting: Five minutes.
4. Enclosure: NEMA 250, Type 4X.
5. Operation of Pump: On or off.
6. Transformer: Provide if required.
7. Power Requirement: 120 V ac.
8. Programmable Sequence of Operation: Limit pump operation to periods of burner operation, plus maximum five minutes after the burner stops.

PART 3 - EXECUTION

3.1 EXAMINATION

A. Examine roughing-in for domestic-water-piping system to verify actual locations of piping connections before pump installation.

3.2 PUMP INSTALLATION

A. Comply with HI 1.4.

B. Mount pumps in orientation complying with manufacturer's written instructions.

C. Pump Mounting:

1. Install vertically mounted, in-line, close-coupled centrifugal pumps with cast-iron base mounted on concrete base using vibration isolation type and deflection as specified in Section 220548 "Vibration and Seismic Controls for Plumbing Piping and Equipment."

Comply with requirements for concrete base specified in Section 033000 "Cast-in-Place Concrete."

2. Install dowel rods to connect concrete base to concrete floor. Unless otherwise indicated, install dowel rods on 18-inch centers around the full perimeter of concrete base.
3. For supported equipment, install epoxy-coated anchor bolts that extend through concrete base and anchor into structural concrete floor.
4. Place and secure anchorage devices. Use setting drawings, templates, diagrams, instructions, and directions furnished with items to be embedded.
5. Install anchor bolts to elevations required for proper attachment to supported equipment.

D. Install continuous-thread hanger rods and vibration isolation of size required to support pump weight.

1. Comply with requirements for vibration isolation devices specified in Section 220548 "Vibration and Seismic Controls for Plumbing Piping and Equipment." Fabricate brackets or supports as required.
2. Comply with requirements for hangers and supports specified in Section 220529 "Hangers and Supports for Plumbing Piping and Equipment."

E. Install pressure switches in water-supply piping.

F. Install thermostats in hot-water return piping.

G. Install timers in heater room location.

H. Install time-delay relays in piping between water heaters and hot-water storage tanks.

3.3 PIPING CONNECTIONS

A. Comply with requirements for piping specified in Section 221116 "Domestic Water Piping." Drawings indicate general arrangement of piping, fittings, and specialties.

B. Where installing piping adjacent to inline, domestic-water pumps, allow space for service and maintenance.

C. Connect domestic-water piping to pumps. Install suction and discharge piping equal to or greater than size of pump nozzles.

1. Install flexible connectors adjacent to pumps in suction and discharge piping of the following pumps:

   a. Horizontally mounted, in-line, separately coupled centrifugal pumps.
   b. Horizontally mounted, in-line, close-coupled centrifugal pumps.
   c. Vertically mounted, in-line, close-coupled centrifugal pumps.
   d. Comply with requirements for flexible connectors specified in Section 221116 "Domestic Water Piping."

D. Provide shutoff valve and strainer on suction side of each pump, and check, shutoff, and throttling valves on discharge side of each pump. Install valves and unions same size as connected piping.

Comply with requirements for strainers specified in Section 221119 "Domestic Water Piping Specialties." Comply with requirements for valves specified in the following:

1. Section 220523 "General Duty Valves for Plumbing."
2. Provide pressure gauge at suction of each pump and pressure gauge at discharge of each pump. Install at integral pressure-gauge tappings where provided or install pressure-gauge connectors in suction and discharge piping around pumps. Comply with requirements for pressure gauges and snubbers specified in Section 220519 "Meters and Gages for Plumbing Piping."

3.4 CONTROL CONNECTIONS

A. Install control and electrical power wiring to field-mounted control devices.

B. Connect control wiring between temperature controllers and devices.

C. Interlock pump between water heater and hot-water storage tank with water heater burner and time-delay relay.

3.5 IDENTIFICATION

A. Identify system components. Comply with requirements for identification specified in Section 220553 "Identification for Plumbing Piping and Equipment" for identification of pumps.

3.6 FIELD QUALITY CONTROL

A. Testing Agency: Owner will engage a qualified testing agency to perform tests and inspections.

B. Testing Agency: Engage a qualified testing agency to perform tests and inspections.

C. Manufacturer's Field Service: Engage a factory-authorized service representative to test and inspect components, assemblies, and equipment installations, including connections.

D. Perform tests and inspections with the assistance of a factory-authorized service representative.

E. Tests and Inspections:

1. Leak Test: After installation, charge system and test for leaks. Repair leaks and retest until no leaks exist.
2. Operational Test: After electrical circuitry has been energized, start units to confirm proper motor rotation and unit operation.
3. Test and adjust controls and safeties. Replace damaged and malfunctioning controls and equipment.

F. Inline, domestic-water pump will be considered defective if it does not pass tests and inspections.

G. Prepare test and inspection reports.

3.7 STARTUP SERVICE

A. Engage a factory-authorized service representative to perform startup service.

1. Complete installation and startup check according to manufacturer's written instructions.
2. Check piping connections for tightness.
3. Clean strainers on suction piping.
4. Set pressure switches, thermostats, timers, and time-delay relays for automatic starting and stopping operation of pumps.
5. Perform the following startup checks for each pump before starting:

    a. Verify bearing lubrication.
    b. Verify that pump is free to rotate by hand and that pump for handling hot liquid is free to rotate with pump hot and cold. If pump is bound or drags, do not operate until cause of trouble is determined and corrected.
    c. Verify that pump is rotating in the correct direction.

6. Prime pump by opening suction valves and closing drains, and prepare pump for operation.
7. Start motor.
8. Open discharge valve slowly.
9. Adjust temperature settings on thermostats.
10. Adjust timer settings.

3.8 ADJUSTING

A. Adjust inline, domestic-water pumps to function smoothly, and lubricate as recommended by manufacturer.

B. Adjust initial temperature set points.

C. Set field-adjustable switches and circuit-breaker trip ranges as indicated.

END OF SECTION 221123.21

SECTION 221316 - SANITARY WASTE AND VENT PIPING

PART 1 - GENERAL

1.1 RELATED DOCUMENTS

A. Drawings and general provisions of the Contract, including General and Supplementary Conditions and Division 01 Specification Sections, apply to this Section.

1.2 SUMMARY

A. Section Includes:

1. Hubless, cast-iron soil pipe and fittings.
2. Copper tube and fittings.
3. ABS pipe and fittings.
4. PVC pipe and fittings.
5. Specialty pipe fittings.
6. Encasement for underground metal piping.

1.3 ACTION SUBMITTALS

A. Submittals shall be formatted per Section 220000 “General Plumbing Requirements”. The manufacturer shall resubmit the specification section showing compliance with each respective paragraphs and specified items and features in that particular specification section. All **exceptions** shall be clearly identified by referencing respective paragraph and other requirements. Next to each specification item, indicate the following:

1. “No Exception Taken”.
2. “Exception”. All exceptions shall be clearly identified by referencing respective paragraph and other requirements along with proposed alternative.

B. Product Data: For each type of product.

C. Sustainable Design Submittals:

1. Product Data: For adhesives, indicating VOC content.
2. Laboratory Test Reports: For adhesives, indicating compliance with requirements for low-emitting materials.

D. Shop Drawings: For hubless, single-stack drainage system include plans, elevations, sections, and details.

1.4 INFORMATIONAL SUBMITTALS

A. Seismic Qualification Certificates: For waste and vent piping, accessories, and components, from manufacturer.

1. Basis for Certification: Indicate whether certification is based on actual test of assembled components or on calculation.
2. Detailed description of piping anchorage devices on which the certification is based and their installation requirements.

B. Field quality-control reports.

1.5 FIELD CONDITIONS

A. Interruption of Existing Sanitary Waste Service: Do not interrupt service to facilities occupied by Owner or others unless permitted under the following conditions and then only after arranging to provide temporary service according to requirements indicated:

1. Notify Architect, Construction Manager and Owner no fewer than two days in advance of proposed interruption of sanitary waste service.
2. Do not proceed with interruption of sanitary waste service without Architect's, Construction Manager's and Owner's written permission.

1.6 WARRANTY

A. Listed manufacturers to provide labelling and warranty of their respective products.

PART 2 - PRODUCTS

2.1 PERFORMANCE REQUIREMENTS

A. Components and installation shall be capable of withstanding the following minimum working pressure unless otherwise indicated:

1. Soil, Waste, and Vent Piping: 10-foot head of water.
2. Waste, Force-Main Piping: 50 psig, 100 psig or 150 psig.

B. Seismic Performance: Soil, waste, and vent piping and support and installation shall withstand the effects of earthquake motions determined according to ASCE/SEI 7.

2.2 PIPING MATERIALS

A. Piping materials shall bear label, stamp, or other markings of specified testing agency.

B. Comply with requirements in "Piping Schedule" Article for applications of pipe, tube, fitting materials, and joining methods for specific services, service locations, and pipe sizes.

2.3 HUBLESS, CAST-IRON SOIL PIPE AND FITTINGS

A. Manufacturers: Subject to compliance with requirements, available manufacturers offering products that may be incorporated into the Work include, but are not limited to, the following:

1. AB & I Foundry; a part of the McWane family of companies.
2. Charlotte Pipe and Foundry Company.
3. Tyler Pipe; a part of McWane family of companies.

B. Pipe and Fittings: ASTM A888 or CISPI 301.

C. CISPI, Hubless-Piping Couplings:

1. Manufacturers: Subject to compliance with requirements, available manufacturers offering products that may be incorporated into the Work include, but are not limited to, the following:

a. ANACO-Husky.
b. Charlotte Pipe and Foundry Company.
c. Tyler Pipe; a subsidiary of McWane Inc.

2. Standards: ASTM C1277 and CISPI 310.
3. Description: Stainless-steel corrugated shield with stainless-steel bands and tightening devices; and ASTM C564, rubber sleeve with integral, center pipe stop.

D. Heavy-Duty, Hubless-Piping Couplings:

1. Manufacturers: Subject to compliance with requirements, available manufacturers offering products that may be incorporated into the Work include, but are not limited to, the following:

a. ANACO-Husky.
b. Charlotte Pipe and Foundry Company.
c. Tyler Pipe; a subsidiary of McWane Inc.

2. Standards: ASTM C1277 and ASTM C1540.
3. Description: Stainless-steel shield with stainless-steel bands and tightening devices; and ASTM C564, rubber sleeve with integral, center pipe stop.

2.4 COPPER TUBE AND FITTINGS

A. Copper Type DWV Tube: ASTM B306, drainage tube, drawn temper.

B. Copper Drainage Fittings: ASME B16.23, cast copper or ASME B16.29, wrought copper, solder-joint fittings.

C. Hard Copper Tube: ASTM B88, Type L and Type M, water tube, drawn temper.

D. Copper Pressure Fittings:

1. Copper Fittings: ASME B16.18, cast-copper-alloy or ASME B16.22, wrought-copper, solder-joint fittings. Furnish wrought-copper fittings if indicated.
2. Copper Unions: MSS SP-123, copper-alloy, hexagonal-stock body with ball-and-socket, metal-to-metal seating surfaces, and solder-joint or threaded ends.

E. Copper Flanges: ASME B16.24, Class 150, cast copper with solder-joint end.

1. Flange Gasket Materials: ASME B16.21, full-face, flat, nonmetallic, asbestos-free, 1/8-inch maximum thickness unless thickness or specific material is indicated.
2. Flange Bolts and Nuts: ASME B18.2.1, carbon steel unless otherwise indicated.

F. Solder: ASTM B32, lead free with ASTM B813, water-flushable flux.

2.5 ABS PIPE AND FITTINGS

A. Comply with NSF 14, "Plastics Piping Systems Components and Related Materials," for plastic piping components. Include marking with "NSF-dwv" for plastic drain, waste, and vent piping and "NSF-sewer" for plastic sewer piping.

B. Solid-Wall ABS Pipe: ASTM D2661, Schedule 40.

C. Cellular-Core ABS Pipe: ASTM F628, Schedule 40.

D. ABS Socket Fittings: ASTM D2661, made to ASTM D3311, drain, waste, and vent patterns.

E. Solvent Cement: ASTM D2235.

1. Solvent cement shall have a VOC content of 325 g/L or less.
2. Solvent cement shall comply with the testing and product requirements of the California Department of Public Health's "Standard Method for the Testing and Evaluation of Volatile Organic Chemical Emissions from Indoor Sources Using Environmental Chambers."

2.6 PVC PIPE AND FITTINGS

A. Comply with NSF 14, "Plastics Piping Systems Components and Related Materials," for plastic piping components. Include marking with "NSF-dwv" for plastic drain, waste, and vent piping and "NSF-sewer" for plastic sewer piping.

B. Solid-Wall PVC Pipe: ASTM D2665, drain, waste, and vent.

C. Cellular-Core PVC Pipe: ASTM F891, Schedule 40.

D. PVC Socket Fittings: ASTM D2665, made to ASTM D3311, drain, waste, and vent patterns and to fit Schedule 40 pipe.

E. Adhesive Primer: ASTM F656.

1. Adhesive primer shall comply with the testing and product requirements of the California Department of Public Health's "Standard Method for the Testing and Evaluation of Volatile Organic Chemical Emissions from Indoor Sources Using Environmental Chambers."

F. Solvent Cement: ASTM D2564.

1. Solvent cement shall have a VOC content of 510 g/L or less.

2.7 SPECIALTY PIPE FITTINGS

A. Transition Couplings:

1. Fitting-Type Transition Couplings: Manufactured piping coupling or specified piping system fitting.

2. Shielded, Nonpressure Transition Couplings:

a. Manufacturers: Subject to compliance with requirements, available manufacturers offering products that may be incorporated into the Work include, but are not limited to the following:

1) Cascade Waterworks Mfg. Co.
2) Mission Rubber Company, LLC; a division of MCP Industries.

b. Standard: ASTM C1460.
c. Description: Elastomeric or rubber sleeve with full-length, corrosion-resistant outer shield and corrosion-resistant-metal tension band and tightening mechanism on each end.
d. End Connections: Same size as and compatible with pipes to be joined.

2.8 ENCASEMENT FOR UNDERGROUND METAL PIPING

A. Standard: ASTM A674 or AWWA C105/A 21.5.

B. Material: Linear low-density polyethylene film of 0.008-inch or high-density, cross-laminated polyethylene film of 0.004-inchminimum thickness.

C. Form: Sheet or tube.

D. Color: Natural.

PART 3 - EXECUTION

3.1 EARTH MOVING

A. Comply with requirements for excavating, trenching, and backfilling specified in Section 312000 "Earth Moving."

3.2 PIPING INSTALLATION

A. Drawing plans, schematics, and diagrams indicate general location and arrangement of piping systems.

1. Indicated locations and arrangements were used to size pipe and calculate friction loss, expansion, pump sizing, and other design considerations.
2. Install piping as indicated unless deviations to layout are approved on coordination drawings.

B. Install piping in concealed locations unless otherwise indicated and except in equipment rooms and service areas.

C. Install piping indicated to be exposed and piping in equipment rooms and service areas at right angles or parallel to building walls. Diagonal runs are prohibited unless specifically indicated otherwise.

D. Install piping above accessible ceilings to allow sufficient space for ceiling panel removal.

E. Install piping to permit valve servicing.

F. Install piping at indicated slopes.

G. Install piping free of sags and bends.

H. Install fittings for changes in direction and branch connections.

I. Install piping to allow application of insulation.

J. Provided seismic restraints on piping. Comply with requirements for seismic-restraint devices specified in Section 220548 "Vibration and Seismic Controls for Plumbing Piping and Equipment."

K. All cleanouts shall be installed where readily accessible. The contractor shall coordinate all cleanout locations with equipment, cabinets, etc. and architect prior to any installation.

L. Make changes in direction for soil and waste drainage and vent piping using appropriate branches, bends, and long-sweep bends.

1. Sanitary tees and short-sweep 1/4 bends may be used on vertical stacks if change in direction of flow is from horizontal to vertical.

2. Use long-turn, double Y-branch and 1/8-bend fittings if two fixtures are installed back to back or side by side with common drain pipe.

    a. Straight tees, elbows, and crosses may be used on vent lines.

3. Do not change direction of flow more than 90 degrees.
4. Use proper size of standard increasers and reducers if pipes of different sizes are connected.

    a. Reducing size of waste piping in direction of flow is prohibited.

M. Lay buried building waste piping beginning at low point of each system.

1. Install true to grades and alignment indicated, with unbroken continuity of invert. Place hub ends of piping upstream.
2. Install required gaskets according to manufacturer's written instructions for use of lubricants, cements, and other installation requirements.
3. Maintain swab in piping and pull past each joint as completed.

N. Install soil and waste and vent piping at the following minimum slopes unless otherwise indicated:

1. Building Sanitary Waste: 2 percent downward in direction of flow for piping NPS 3 and smaller; 1 or 2percent downward in direction of flow for piping NPS 4 and larger.
2. Horizontal Sanitary Waste Piping: 2 percent downward in direction of flow.
3. Vent Piping: 1 percent down toward vertical fixture vent or toward vent stack.

O. Install cast-iron soil piping according to CISPI's "Cast Iron Soil Pipe and Fittings Handbook," Chapter IV, "Installation of Cast Iron Soil Pipe and Fittings."

1. Install encasement on underground piping according to ASTM A674 or AWWA C105/A 21.5.

P. Install aboveground copper tubing according to CDA's "Copper Tube Handbook."

Q. Install aboveground ABS piping according to ASTM D2661.

R. Install aboveground PVC piping according to ASTM D2665.

S. Install underground ABS and PVC piping according to ASTM D2321.

T. Install engineered soil and waste and vent piping systems as follows:

1. Combination Waste and Vent: Comply with standards of authorities having jurisdiction.
2. Hubless, Single-Stack Drainage System: Comply with ASME B16.45 and hubless, single-stack aerator fitting manufacturer's written installation instructions.
3. Reduced-Size Venting: Comply with standards of authorities having jurisdiction.

U. Install underground, ductile-iron, force-main piping according to AWWA C600.

1. Install buried piping inside building between wall and floor penetrations and connection to sanitary sewer piping outside building with restrained joints.

2. Anchor pipe to wall or floor. Install thrust-block supports at vertical and horizontal offsets.
3. Install encasement on piping according to ASTM A674 or AWWA C105/A 21.5.

V. Install underground, copper, force-main tubing according to CDA's "Copper Tube Handbook."

1. Install encasement on piping according to ASTM A674 or AWWA C105/A 21.5.

W. Install force mains at elevations indicated.

X. Plumbing Specialties:

1. Install backwater valves in sanitary waster gravity-flow piping.

a. Comply with requirements for backwater valves specified in Section 221319 "Sanitary Waste Piping Specialties."

2. Install cleanouts at grade and extend to where building sanitary drains connect to building sanitary sewers in sanitary waste gravity-flow piping.

a. Install cleanout fitting with closure plug inside the building in sanitary drainage force-main piping.
b. Comply with requirements for cleanouts specified in Section 221319 "Sanitary Waste Piping Specialties."

3. Install drains in sanitary waste gravity-flow piping.

a. Comply with requirements for drains specified in Section 221319 "Sanitary Waste Piping Specialties."

Y. Do not enclose, cover, or put piping into operation until it is inspected and approved by authorities having jurisdiction.

Z. Install sleeves for piping penetrations of walls, ceilings, and floors.

1. Comply with requirements for sleeves specified in Section 220517 "Sleeves and Sleeve Seals for Plumbing Piping."

AA. Install sleeve seals for piping penetrations of concrete walls and slabs.

1. Comply with requirements for sleeve seals specified in Section 220517 "Sleeves and Sleeve Seals for Plumbing Piping."

BB. Install escutcheons for piping penetrations of walls, ceilings, and floors.

1. Comply with requirements for escutcheons specified in Section 220518 "Escutcheons for Plumbing Piping."

3.3 JOINT CONSTRUCTION

A. Join hub-and-spigot, cast-iron soil piping with gasket joints according to CISPI's "Cast Iron Soil Pipe and Fittings Handbook" for compression joints.

B. Join hub-and-spigot, cast-iron soil piping with calked joints according to CISPI's "Cast Iron Soil Pipe and Fittings Handbook" for lead-and-oakum calked joints.

C. Join hubless, cast-iron soil piping according to CISPI 310 and CISPI's "Cast Iron Soil Pipe and Fittings Handbook" for hubless-piping coupling joints.

D. Threaded Joints: Thread pipe with tapered pipe threads according to ASME B1.20.1.

1. Cut threads full and clean using sharp dies.
2. Ream threaded pipe ends to remove burrs and restore full ID. Join pipe fittings and valves as follows:

a. Apply appropriate tape or thread compound to external pipe threads unless dry seal threading is specified.
b. Damaged Threads: Do not use pipe or pipe fittings with threads that are corroded or damaged.
c. Do not use pipe sections that have cracked or open welds.

E. Join stainless-steel pipe and fittings with gaskets according to ASME A112.3.1.

F. Join copper tube and fittings with soldered joints according to ASTM B828. Use ASTM B813, water-flushable, lead-free flux and ASTM B32, lead-free-alloy solder.

G. Grooved Joints: Cut groove ends of pipe according to AWWA C606. Lubricate and install gasket over ends of pipes or pipe and fitting. Install coupling housing sections, over gasket, with keys seated in piping grooves. Install and tighten housing bolts.

H. Flanged Joints: Align bolt holes. Select appropriate gasket material, size, type, and thickness. Install gasket concentrically positioned. Use suitable lubricants on bolt threads. Torque bolts in cross pattern.

I. Plastic, Nonpressure-Piping, Solvent-Cement Joints: Clean and dry joining surfaces. Join pipe and fittings according to the following:

1. Comply with ASTM F402 for safe-handling practice of cleaners, primers, and solvent cements.
2. ABS Piping: Join according to ASTM D2235 and ASTM D2661 appendixes.
3. PVC Piping: Join according to ASTM D2855 and ASTM D2665 appendixes.

3.4 SPECIALTY PIPE FITTING INSTALLATION

A. Transition Couplings:

1. Install transition couplings at joints of piping with small differences in ODs.
2. In Waste Drainage Piping: Unshielded or Shielded, nonpressure transition couplings.
3. In Aboveground Force Main Piping: Fitting-type transition couplings.

4. In Underground Force Main Piping:

    a. NPS 1-1/2 and Smaller: Fitting-type transition couplings.
    b. NPS 2 and Larger: Pressure transition couplings.

B. Dielectric Fittings:

1. Install dielectric fittings in piping at connections of dissimilar metal piping and tubing.
2. Dielectric Fittings for NPS 2 and Smaller: Use dielectric nipples or unions.
3. Dielectric Fittings for NPS 2-1/2 to NPS 4: Use dielectric flanges, flange kits or nipples.
4. Dielectric Fittings for NPS 5 and Larger: Use dielectric flange kits.

3.5 VALVE INSTALLATION

A. Comply with requirements in Section 220523.12 "Ball Valves for Plumbing Piping," Section 220523.13 "Butterfly Valves for Plumbing Piping," Section 220523.14 "Check Valves for Plumbing Piping," and Section 220523.15 "Gate Valves for Plumbing Piping" for general-duty valve installation requirements.

B. Shutoff Valves:

1. Install shutoff valve on each sewage pump discharge.
2. Install full-port ball valve for piping NPS 2 and smaller.
3. Install gate valve for piping NPS 2-1/2 and larger.

C. Check Valves: Install swing check valve, between pump and shutoff valve, on each sewage pump discharge.

D. Backwater Valves: Install backwater valves in piping subject to backflow.

1. Horizontal Piping: Horizontal backwater valves. Use normally closed type unless otherwise indicated.
2. Floor Drains: Drain outlet backwater valves unless drain has integral backwater valve.
3. Install backwater valves in accessible locations.
4. Comply with requirements for backwater valve specified in Section 221319 "Sanitary Waste Piping Specialties."

3.6 HANGER AND SUPPORT INSTALLATION

A. Comply with requirements for seismic-restraint devices specified in Section 220548 "Vibration and Seismic Controls for Plumbing Piping and Equipment."

B. Comply with requirements for pipe hanger and support devices and installation specified in Section 220529 "Hangers and Supports for Plumbing Piping and Equipment." and Section 220548.13 "Vibration Controls for Plumbing Piping and Equipment."

1. Install carbon-steel pipe hangers for horizontal piping in noncorrosive environments.

2. Install stainless-steel or fiberglass pipe hangers for horizontal piping in corrosive environments.
3. Install carbon-steel pipe support clamps for vertical piping in noncorrosive environments.
4. Install stainless-steel pipe support clamps for vertical piping in corrosive environments.
5. Vertical Piping: MSS Type 8 or Type 42, clamps.
6. Install individual, straight, horizontal piping runs:

    a. 100 Feet and Less: MSS Type 1, adjustable, steel clevis hangers.
    b. Longer Than 100 Feet: MSS Type 43, adjustable roller hangers.
    c. Longer Than 100 Feet if Indicated: MSS Type 49, spring cushion rolls.

7. Multiple, Straight, Horizontal Piping Runs 100 Feet or Longer: MSS Type 44, pipe rolls. Support pipe rolls on trapeze.
8. Base of Vertical Piping: MSS Type 52, spring hangers.

C. Support horizontal piping and tubing within 12 inches of each fitting, valve, and coupling.

D. Support vertical piping and tubing at base and at each floor.

E. Rod diameter may be reduced one size for double-rod hangers, with 3/8-inch minimum rods.

F. Install hangers for cast-iron soil piping with the following maximum horizontal spacing and minimum rod diameters:

1. NPS 1-1/2 and NPS 2: 60 inches with 3/8-inch rod.
2. NPS 3: 60 inches with 1/2-inch rod.
3. NPS 4 and NPS 5: 60 inches with 5/8-inch rod.
4. NPS 6 and NPS 8: 60 inches with 3/4-inch rod.
5. NPS 10 and NPS 12: 60 inches with 7/8-inch rod.
6. Spacing for 10-foot lengths may be increased to 10 feet. Spacing for fittings is limited to 60 inches.

G. Install supports for vertical cast-iron soil piping every 15 feet.

H. Install supports for vertical steel piping every 15 feet.

I. Install hangers for stainless-steel piping with the following maximum horizontal spacing and minimum rod diameters:

1. NPS 2: 84 inches with 3/8-inch rod.
2. NPS 3: 96 inches with 1/2-inch rod.
3. NPS 4: 108 inches with 1/2-inch rod.
4. NPS 6: 10 feet with 5/8-inch rod.

J. Install supports for vertical stainless-steel piping every 10 feet.

K. Install hangers for copper tubing with the following maximum horizontal spacing and minimum rod diameters:

1. NPS 1-1/4: 72 inches with 3/8-inch rod.

2. NPS 1-1/2 and NPS 2: 96 inches with 3/8-inch rod.
3. NPS 2-1/2: 108 inches with 1/2-inch rod.
4. NPS 3 and NPS 5: 10 feet with 1/2-inch rod.
5. NPS 6: 10 feet with 5/8-inch rod.
6. NPS 8: 10 feet with 3/4-inch rod.

L. Install supports for vertical copper tubing every 10 feet.

M. Install hangers for ABS and PVC piping with the following maximum horizontal spacing and minimum rod diameters:

1. NPS 1-1/2 and NPS 2: 48 inches with 3/8-inch rod.
2. NPS 3: 48 inches with 1/2-inch rod.
3. NPS 4 and NPS 5: 48 inches with 5/8-inch rod.
4. NPS 6 and NPS 8: 48 inches with 3/4-inch rod.
5. NPS 10 and NPS 12: 48 inches with 7/8-inch rod.

N. Install supports for vertical ABS and PVC piping every 48 inches.

O. Support piping and tubing not listed above according to MSS SP-58 and manufacturer's written instructions.

3.7 CONNECTIONS

A. Drawings indicate general arrangement of piping, fittings, and specialties.

B. Connect soil and waste piping to exterior sanitary sewerage piping. Use transition fitting to join dissimilar piping materials.

C. Connect waste and vent piping to the following:

1. Plumbing Fixtures: Connect waste piping in sizes indicated, but not smaller than required by plumbing code.
2. Plumbing Fixtures and Equipment: Connect atmospheric vent piping in sizes indicated, but not smaller than required by authorities having jurisdiction.
3. Plumbing Specialties: Connect waste and vent piping in sizes indicated, but not smaller than required by plumbing code.
4. Install test tees (wall cleanouts) in conductors near floor and floor cleanouts with cover flush with floor.
5. Install horizontal backwater valves with cleanout cover flush with floor or in pit with pit cover flush with floor.
6. Comply with requirements for backwater valves cleanouts and drains specified in Section 221319 "Sanitary Waste Piping Specialties."
7. Equipment: Connect waste piping as indicated.

    a. Provide shutoff valve if indicated and union for each connection.
    b. Use flanges instead of unions for connections NPS 2-1/2 and larger.

D. Connect force-main piping to the following:

1. Sanitary Sewer: To exterior force main.
2. Sewage Pump: To sewage pump discharge.

E. Where installing piping adjacent to equipment, allow space for service and maintenance of equipment.

F. Make connections according to the following unless otherwise indicated:

1. Install unions, in piping NPS 2 and smaller, adjacent to each valve and at final connection to each piece of equipment.
2. Install flanges, in piping NPS 2-1/2 and larger, adjacent to flanged valves and at final connection to each piece of equipment.

3.8 IDENTIFICATION

A. Identify exposed sanitary waste and vent piping.

B. Comply with requirements for identification specified in Section 220553 "Identification for Plumbing Piping and Equipment."

3.9 FIELD QUALITY CONTROL

A. During installation, notify authorities having jurisdiction at least 24 hours before inspection must be made. Perform tests specified below in presence of authorities having jurisdiction.

1. Roughing-in Inspection: Arrange for inspection of piping before concealing or closing-in after roughing-in and before setting fixtures.
2. Final Inspection: Arrange for final inspection by authorities having jurisdiction to observe tests specified below and to ensure compliance with requirements.

B. Reinspection: If authorities having jurisdiction find that piping will not pass test or inspection, make required corrections and arrange for reinspection.

C. Reports: Prepare inspection reports and have them signed by authorities having jurisdiction.

D. Test sanitary waste and vent piping according to procedures of authorities having jurisdiction or, in absence of published procedures, as follows:

1. Test for leaks and defects in new piping and parts of existing piping that have been altered, extended, or repaired.

   a. If testing is performed in segments, submit separate report for each test, complete with diagram of portion of piping tested.

2. Leave uncovered and unconcealed new, altered, extended, or replaced waste and vent piping until it has been tested and approved.

   a. Expose work that was covered or concealed before it was tested.

3. Roughing-in Plumbing Test Procedure: Test waste and vent piping except outside leaders on completion of roughing-in.

    a. Close openings in piping system and fill with water to point of overflow, but not less than 10-foot head of water.
    b. From 15 minutes before inspection starts to completion of inspection, water level must not drop.
    c. Inspect joints for leaks.

4. Finished Plumbing Test Procedure: After plumbing fixtures have been set and traps filled with water, test connections and prove they are gastight and watertight.

    a. Plug vent-stack openings on roof and building drains where they leave building. Introduce air into piping system equal to pressure of 1-inch wg.
    b. Use U-tube or manometer inserted in trap of water closet to measure this pressure.
    c. Air pressure must remain constant without introducing additional air throughout period of inspection.
    d. Inspect plumbing fixture connections for gas and water leaks.

5. Repair leaks and defects with new materials and retest piping, or portion thereof, until satisfactory results are obtained.
6. Prepare reports for tests and required corrective action.

E. Test force-main piping according to procedures of authorities having jurisdiction or, in absence of published procedures, as follows:

1. Leave uncovered and unconcealed new, altered, extended, or replaced force-main piping until it has been tested and approved.

    a. Expose work that was covered or concealed before it was tested.

2. Cap and subject piping to static-water pressure of 50 psig above operating pressure, without exceeding pressure rating of piping system materials.

    a. Isolate test source and allow to stand for four hours.
    b. Leaks and loss in test pressure constitute defects that must be repaired.

3. Repair leaks and defects with new materials and retest piping, or portion thereof, until satisfactory results are obtained.
4. Prepare reports for tests and required corrective action.

3.10 CLEANING AND PROTECTION

A. Clean interior of piping. Remove dirt and debris as work progresses.

B. Protect sanitary waste and vent piping during remainder of construction period to avoid clogging with dirt and debris and to prevent damage from traffic and construction work.

C. Cover all floor drains and floor sinks during constructions to prevent debris from entering pipe and protect grates from damages.

D. Place plugs in ends of uncompleted piping at end of day and when work stops.

E. Exposed ABS and PVC Piping: Protect plumbing vents exposed to sunlight with two coats of water-based latex paint.

F. Repair damage to adjacent materials caused by waste and vent piping installation.

3.11 PIPING SCHEDULE

A. Flanges and unions may be used on aboveground pressure piping unless otherwise indicated.

B. Aboveground, soil and waste piping NPS 4 and smaller shall be any of the following:

1. Service class, cast-iron soil pipe and fittings; gaskets; and gasketed joints.
2. Hubless, cast-iron soil pipe and fittings and hubless, single-stack aerator fittings; CISPI or heavy-duty hubless-piping couplings; and coupled joints.
3. Galvanized-steel pipe, drainage fittings, and threaded joints.
4. Copper Type DWV tube, copper drainage fittings, and soldered joints.
5. Solid-wall or Cellular-core ABS pipe, ABS socket fittings, and solvent-cemented joints.
6. Solid-wall or Cellular-core PVC pipe, PVC socket fittings, and solvent-cemented joints.
7. Dissimilar Pipe-Material Couplings: Unshielded or Shielded, nonpressure transition couplings.

C. Aboveground, soil and waste piping NPS 5 and larger shall be any of the following:

1. Service class, cast-iron soil pipe and fittings; gaskets; and gasketed joints.
2. Hubless, cast-iron soil pipe and fittings and hubless, single-stack aerator fittings; CISPI or heavy-duty hubless-piping couplings; and coupled joints.
3. Galvanized-steel pipe, drainage fittings, and threaded joints.
4. Solid-wall or Cellular-core PVC pipe, PVC socket fittings, and solvent-cemented joints.
5. Dissimilar Pipe-Material Couplings: Unshielded or Shielded, nonpressure transition couplings.

D. Aboveground, vent piping NPS 4 and smaller shall be any of the following:

1. Service class, cast-iron soil pipe and fittings; gaskets; and gasketed joints.
2. Hubless, cast-iron soil pipe and fittings; CISPI or heavy-duty hubless-piping couplings; and coupled joints.
3. Galvanized-steel pipe, drainage fittings, and threaded joints.
4. Copper Type DWV tube, copper drainage fittings, and soldered joints.

    a. Option for Vent Piping, NPS 2-1/2: Hard copper tube, Type M; copper pressure fittings; and soldered joints.

5. Solid-wall or Cellular-core ABS pipe, ABS socket fittings, and solvent-cemented joints.
6. Solid-wall or Cellular-core PVC pipe, PVC socket fittings, and solvent-cemented joints.

7. Dissimilar Pipe-Material Couplings: Unshielded or Shielded, nonpressure transition couplings.

E. Aboveground, vent piping NPS 5 and larger shall be any of the following:

1. Service class, cast-iron soil pipe and fittings; gaskets; and gasketed joints.
2. Hubless, cast-iron soil pipe and fittings; CISPI or heavy-duty hubless-piping couplings; and coupled joints.
3. Galvanized-steel pipe, drainage fittings, and threaded joints.
4. Solid-wall or Cellular-core PVC pipe, PVC socket fittings, and solvent-cemented joints.
5. Dissimilar Pipe-Material Couplings: Unshielded or Shielded, nonpressure transition couplings.

F. Underground, soil, waste, and vent piping NPS 4 and smaller shall be any of the following:

1. Extra Heavy or Service class, cast-iron soil piping; gaskets; and gasketed or calking materials; and calked joints.
2. Hubless, cast-iron soil pipe and fittings; CISPI, heavy-duty cast-iron hubless-piping couplings; and coupled joints.
3. Solid wall or Cellular-core ABS pipe, ABS socket fittings, and solvent-cemented joints.
4. Solid wall or Cellular-core PVC pipe, PVC socket fittings, and solvent-cemented joints.
5. Dissimilar Pipe-Material Couplings: Unshielded or Shielded, nonpressure transition couplings.

G. Underground, soil and waste piping NPS 5 and larger shall be any of the following:

1. Extra Heavy or Service class, cast-iron soil piping; gaskets; and gasketed or calking materials; and calked joints.
2. Hubless, cast-iron soil pipe and fittings; CISPI or heavy-duty cast-iron hubless-piping couplings; coupled joints.
3. Solid-wall or Cellular-core PVC pipe; PVC socket fittings; and solvent-cemented joints.
4. Dissimilar Pipe-Material Couplings: Unshielded or Shielded, nonpressure transition couplings.

H. Aboveground sanitary-sewage force mains NPS 1-1/2 and NPS 2 shall be any of the following:

1. Hard copper tube, Type L; copper pressure fittings; and soldered joints.
2. Galvanized-steel pipe, pressure fittings, and threaded joints.

I. Aboveground sanitary-sewage force mains NPS 2-1/2 to NPS 6shall be any of the following:

1. Hard copper tube, Type L; copper pressure fittings; and soldered joints.
2. Galvanized-steel pipe, pressure fittings, and threaded joints.
3. Grooved-end, galvanized-steel pipe; grooved-joint, galvanized-steel-pipe appurtenances; and grooved joints.

J. Underground sanitary-sewage force mains NPS 4 and smaller] shall be any of the following:

1. Hard copper tube, Type L; wrought-copper pressure fittings; and soldered joints.
2. Ductile-iron, mechanical-joint piping and mechanical joints.

3. Ductile-iron, push-on-joint piping and push-on joints.
4. Ductile-iron, grooved-joint piping and grooved joints.
5. Fitting-type transition coupling for piping smaller than NPS 1-1/2 and pressure transition coupling for NPS 1-1/2 and larger if dissimilar pipe materials.

K. Underground sanitary-sewage force mains NPS 5 and larger shall be any of the following:

1. Hard copper tube, Type L; wrought-copper pressure fittings; and soldered joints.
2. Ductile-iron, mechanical-joint piping and mechanical joints.
3. Ductile-iron, push-on-joint piping and push-on joints.
4. Ductile-iron, grooved-joint piping and grooved joints.
5. Pressure transition couplings if dissimilar pipe materials.

END OF SECTION 221316

SECTION 221319 - SANITARY WASTE PIPING SPECIALTIES

PART 1 - GENERAL

1.1 RELATED DOCUMENTS

A. Drawings and general provisions of the Contract, including General and Supplementary Conditions and Division 01 Specification Sections, apply to this Section.

1.2 SUMMARY

A. Section Includes:

1. Backwater valves.
2. Cleanouts.
3. Roof flashing assemblies.
4. Through-penetration firestop assemblies.
5. Miscellaneous sanitary drainage piping specialties.
6. Floor drains.
7. Floor sinks.

B. Related Requirements:

1. Section 221423 "Storm Drainage Piping Specialties" for trench drains for storm water, channel drainage systems for storm water, roof drains, and catch basins.
2. Section 224300 "Healthcare Plumbing Fixtures" for plaster sink interceptors.
3. Section 334200 "Stormwater Conveyance" for storm drainage piping and piping specialties outside the building.

1.3 DEFINITIONS

A. ABS: Acrylonitrile-butadiene-styrene.

B. FOG: Fats, oils, and greases.

C. PVC: Polyvinyl chloride.

D. FRP: Fiberglass-reinforced plastic.

E. HDPE: High-density polyethylene.

F. PE: Polyethylene.

G. PP: Polypropylene.

1.4 ACTION SUBMITTALS

A. Submittals shall be formatted per Section 220000 "General Plumbing Requirements". The manufacturer shall resubmit the specification section showing compliance with each respective paragraphs and specified items and features in that particular specification section. All **exceptions** shall be clearly identified by referencing respective paragraph and other requirements. Next to each specification item, indicate the following:

1. "No Exception Taken".
2. "Exception". All exceptions shall be clearly identified by referencing respective paragraph and other requirements along with proposed alternative.

B. Product Data: For each type of product. Include rated capacities, operating characteristics, and accessories for the following:

1. FOG disposal systems.

C. Shop Drawings:

1. Show fabrication and installation details for frost-resistant vent terminals.
2. Wiring Diagrams: Power, signal, and control wiring.

1.5 INFORMATIONAL SUBMITTALS

A. Seismic Qualification Data: For FOG disposal systems, accessories, and components, from manufacturer.

1. Basis for Certification: Indicate whether withstand certification is based on actual test of assembled components or on calculation.
2. Dimensioned Outline Drawings of Equipment Unit: Identify center of gravity and locate and describe mounting and anchorage provisions.
3. Detailed description of equipment anchorage devices on which the certification is based and their installation requirements.

B. Field quality-control reports.

1.6 CLOSEOUT SUBMITTALS

A. Operation and Maintenance Data: For sanitary waste piping specialties to include in emergency, operation, and maintenance manuals.

PART 2 - PRODUCTS

2.1 ASSEMBLY DESCRIPTIONS

A. Sanitary waste piping specialties shall bear label, stamp, or other markings of specified testing agency.

B. Comply with NSF 14 for plastic sanitary waste piping specialty components.

C. Electrical Components, Devices, and Accessories: Listed and labeled as defined in NFPA 70, by a qualified testing, and marked for intended location and application.

2.2 BACKWATER VALVES

A. Horizontal, Cast-Iron Backwater Valves:

1. Manufacturers: Subject to compliance with requirements, available manufactures offering products that may be incorporated into the work include but are not limited to the following:

   a. Jay R. Smith Mfg. Co.
   b. MIFAB, Inc.
   c. Zurn Industries, LLC.

2. Standard: ASME A112.14.1.
3. Size: Same as connected piping.
4. Body: Cast iron.
5. Cover: Cast iron with bolted or threaded access check valve.
6. End Connections: Hub and spigot or hubless.
7. Type Check Valve: Removable, bronze, swing check, factory assembled or field modified to hang closed or open for airflow unless subject to backflow condition.
8. Extension: ASTM A74, Service class; full-size, cast-iron, soil-pipe extension to field-installed cleanout at floor; replaces backwater valve cover.

B. Drain-Outlet Backwater Valves:

1. <Manufacturers: Subject to compliance with requirements, provide products by one of the following:

   a. Jay R. Smith Mfg. Co.
   b. WATTS.
   c. Zurn Industries, LLC.

2. Size: Same as floor drain outlet.
3. Body: Cast iron or bronze made for vertical installation in bottom outlet of floor drain.
4. Check Valve: Removable ball float.
5. Inlet: Threaded.
6. Outlet: Threaded or spigot.

C. Horizontal, Plastic Backwater Valves:

1. Manufacturers: Subject to compliance with requirements, provide products by one of the following:

   a. Canplas LLC.
   b. IPS Corporation.

c. NDS Inc.

2. Size: Same as connected piping.
3. Body: ABS or PVC.
4. Cover: Same material as body with threaded access to check valve.
5. Check Valve: Removable swing check.
6. End Connections: Socket type.

2.3 CLEANOUTS

A. Cast-Iron Exposed Cleanouts:

1. Manufacturers: Subject to compliance with requirements, provide products by one of the following:

   a. Jay R. Smith Mfg. Co.
   b. MIFAB, Inc.
   c. Zurn Industries, LLC.

2. Standard: ASME A112.36.2M.
3. Size: Same as connected drainage piping
4. Body Material: Hubless, cast-iron soil pipe test tee as required to match connected piping.
5. Closure: Countersunk or raised-head, brass plug.
6. Closure Plug Size: Same as or not more than one size smaller than cleanout size.

B. Stainless-Steel Exposed Cleanouts:

1. Manufacturers: Subject to compliance with requirements, provide products by one of the following:

   a. BLÜCHER; A Watts brand.
   b. Josam Company.
   c. Mifab.
   d. Watts.

2. Standard: ASME A112.3.1.
3. Size: Same as connected drainage piping
4. Body Material: Stainless-steel tee with side cleanout as required to match connected piping.
5. Closure: Stainless-steel plug with seal.

C. Cast-Iron Exposed Floor Cleanouts:

1. Manufacturers: Subject to compliance with requirements, provide products by one of the following:

   a. Jay R. Smith Mfg. Co.
   b. Josam Company.
   c. Mifab.
   d. Zurn Industries, LLC.

2. Standard: ASME A112.36.2M for heavy-duty, adjustable housing or threaded, adjustable housing cleanout.
3. Size: Same as connected branch.
4. Type: Heavy-duty, adjustable housing or threaded, adjustable housing.
5. Body or Ferrule: Cast iron.
6. Clamping Device: As Required.
7. Outlet Connection: Inside calk, Spigot, or Threaded.
8. Closure: Brass plug with straight threads and gasket or Brass plug with tapered threads.
9. Adjustable Housing Material: Cast iron with threads or setscrews.
10. Frame and Cover Material and Finish: Nickel-bronze, copper alloy Polished bronze, or Rough bronze.
11. Frame and Cover Shape: Round, or Square when specifically requested by owner.
12. Top Loading Classification: Heavy duty at exterior locations. Light or Medium Duty within building.
13. Riser: ASTM A74, Extra-Heavy or Service class, cast-iron drainage pipe fitting and riser to cleanout.

D. Stainless-Steel Exposed Floor Cleanouts:

1. Manufacturers: Subject to compliance with requirements, provide products by one of the following:

   a. BLÜCHER; A Watts brand.
   b. Josam Company.
   c. Kusel Equipment Co.

2. Standard: ASME A112.3.1.
3. Size: Same as connected branch.
4. Housing: Stainless steel.
5. Closure: Stainless steel with seal.
6. Riser: ASTM A74, Extra-Heavy or Service class, stainless-steel drainage pipe fitting and riser to cleanout.
7. Body or Ferrule: Stainless steel.
8. Clamping Device: as Required.
9. Outlet Connection: Inside calk, Spigot, or Threaded.
10. Closure: Brass plug with straight threads and gasket, or Brass plug with tapered threads.
11. Adjustable Housing Material: Cast iron with threads or setscrews.
12. Frame and Cover Material and Finish: Nickel-bronze, copper alloy, or Stainless steel.
13. Frame and Cover Shape: Round or Square when specifically requested by owner.
14. Top Loading Classification: Heavy duty at exterior locations. Light or Medium Duty within building.

E. Cast-Iron Wall Cleanouts:

1. Manufacturers: Subject to compliance with requirements, provide products by one of the following:

   a. Jay R. Smith Mfg. Co.
   b. MIFAB, Inc.
   c. Zurn Industries, LLC.

2. Standard: ASME A112.36.2M. Include wall access.
3. Size: Same as connected drainage piping.
4. Body: Hub-and-spigot, cast-iron soil pipe T-branch, or Hubless, cast-iron soil pipe test tee as required to match connected piping.
5. Closure Plug:

    a. Brass Cast iron.
    b. Countersunk or raised head.
    c. Drilled and threaded for cover attachment screw.
    d. Size: Same as or not more than one size smaller than cleanout size.

6. Wall Access: Round, flat, chrome-plated brass or stainless-steel cover plate with screw.
7. Wall Access: Round, nickel-bronze, copper-alloy, or stainless-steel wall-installation frame and cover.

2.4 ROOF FLASHING ASSEMBLIES

A. Roof Flashing Assemblies:

1. Manufacturers: Subject to compliance with requirements, provide products by one of the following:

    a. Acorn Engineering Company.
    b. Thaler Metal Industries Ltd.
    c. Zurn Industries, LLC.

2. Description: Manufactured assembly made of 4.0-lb/sq. ft., 0.0625-inch- thick, lead flashing collar and skirt extending at least 8 inches from pipe, with galvanized-steel boot reinforcement and counterflashing fitting.

    a. Open-Top Vent Cap: Without cap.
    b. Low-Silhouette Vent Cap: With vandal-proof vent cap.
    c. Extended Vent Cap: With field-installed, vandal-proof vent cap.

2.5 THROUGH-PENETRATION FIRESTOP ASSEMBLIES

A. Through-Penetration Firestop Assemblies:

1. Manufacturers: Subject to compliance with requirements, provide products by the following:

    a. ProVent Systems.

2. Standard: UL 1479 assembly of sleeve-and-stack fitting with firestopping plug.
3. Size: Same as connected soil, waste, or vent stack.
4. Sleeve: Molded-PVC plastic, of length to match slab thickness and with integral nailing flange on one end for installation in cast-in-place concrete slabs.

5. Stack Fitting: ASTM A48/A48M, gray-iron, hubless-pattern wye branch with neoprene O-ring at base and gray-iron plug in thermal-release harness. Include PVC protective cap for plug.
6. Special Coating: Corrosion resistant on interior of fittings.

2.6 MISCELLANEOUS SANITARY DRAINAGE PIPING SPECIALTIES

A. Open Drains:

1. Description: Shop or field fabricate from ASTM A74, Service class, hub-and-spigot, cast-iron soil-pipe fittings. Include P-trap, hub-and-spigot riser section; and where required, increaser fitting joined with ASTM C564 rubber gaskets.
2. Size: Same as connected waste piping.

B. Deep-Seal Traps:

1. Description: Cast-iron or bronze casting, with inlet and outlet matching connected piping and cleanout trap-seal primer valve connection.
2. Size: Same as connected waste piping.

   a. NPS 2: 4-inch-minimum water seal.
   b. NPS 2-1/2 and Larger: 5-inch-minimum water seal.

C. Floor-Drain, Trap-Seal Primer Fittings:

1. Description: Cast iron, with threaded inlet and threaded or spigot outlet, and trap-seal primer valve connection.
2. Size: Same as floor drain outlet with NPS 1/2 side inlet.

D. Air-Gap Fittings:

1. Standard: ASME A112.1.2, for fitting designed to ensure fixed, positive air gap between installed inlet and outlet piping.
2. Body: Bronze or cast iron.
3. Inlet: Opening in top of body.
4. Outlet: Larger than inlet.
5. Size: Same as connected waste piping and with inlet large enough for associated indirect waste piping.

E. Sleeve Flashing Device:

1. Description: Manufactured, cast-iron fitting, with clamping device that forms sleeve for pipe floor penetrations of floor membrane. Include galvanized-steel pipe extension in top of fitting that will extend 1 inch to 2 inches above finished floor and galvanized-steel pipe extension in bottom of fitting that will extend through floor slab.
2. Size: As required for close fit to riser or stack piping.

F. Stack Flashing Fittings:

1. Description: Counterflashing-type, cast-iron fitting, with bottom recess for terminating roof membrane, and with threaded or hub top for extending vent pipe.
2. Size: Same as connected stack vent or vent stack.

G. Vent Caps:

1. Description: Cast-iron body with threaded or hub inlet and vandal-proof design. Include vented hood and setscrews to secure to vent pipe.
2. Size: Same as connected stack vent or vent stack.

H. Frost-Resistant Vent Terminals:

1. Description: Manufactured or shop-fabricated assembly constructed of copper, lead-coated copper, or galvanized steel.
2. Design: To provide 1-inch enclosed air space between outside of pipe and inside of flashing collar extension, with counterflashing.

I. Expansion Joints:

1. Standard: ASME A112.6.4.
2. Body: Cast iron with bronze sleeve, packing, and gland.
3. End Connections: Matching connected piping.
4. Size: Same as connected soil, waste, or vent piping.

2.7 FLOOR DRAINS

A. Cast-Iron Floor Drains:

1. Manufacturers: Subject to compliance with requirements, available manufacturers offering products that may be incorporated into the Work include, but are not limited to the following:

   a. Jay R. Smith Mfg. Co.
   b. MIFAB, Inc.
   c. WATTS.
   d. Zurn

2. Standard: ASME A112.6.3 with backwater valve where required.
3. Pattern: Area or Floor drain.
4. Body Material: Gray iron.
5. Seepage Flange: As Required.
6. Anchor Flange: As Required.
7. Clamping Device: As Required.
8. Outlet: Bottom.
9. Backwater Valve: Drain-outlet type or Integral, ASME A112.14.1, swing-check type.
10. Coating on Interior and Exposed Exterior Surfaces: Acid-resistant enamel.
11. Sediment Bucket: As Required.
12. Top or Strainer Material: Nickel bronze or Stainless steel.
13. Top of Body and Strainer Finish: Nickel bronze or Stainless steel.

14. Top Shape: Round. Square when specifically requested by owner.
15. Dimensions of Top or Strainer: Refer to Plumbing Fixture Schedule on Construction Plans for body, sump, and grate requirements.
16. Top Loading Classification: Heavy duty at exterior locations. Light or Medium Duty within building.
17. Funnel: Not required.
18. Inlet Fitting: Gray iron, with threaded inlet and threaded or spigot outlet, and trap-seal primer valve connection.
19. Trap Material: Bronze, Cast iron or Copper.
20. Trap Pattern: Deep-seal P-trap or Standard P-trap.
21. Trap Features: Trap-seal primer valve drain connection.

B. Stainless-Steel Floor Drains, ASME A112.3.1:

1. Manufacturers: Subject to compliance with requirements, available manufacturers offering products that may be incorporated into the Work include, but are not limited to the following:

   a. Zurn Industries, LLC.

2. Outlet: Bottom or Side.
3. Top or Strainer Material: Stainless steel.
4. Top Shape: Round. Square when specifically requested by owner.
5. Dimensions of Top or Strainer: Refer to Plumbing Fixture Schedule on Construction Plans for body, sump, and grate requirements.
6. Seepage Flange: As Required.
7. Anchor Flange: As Required.
8. Clamping Device: As Required.
9. Trap-Primer Connection: Required.
10. Trap Material: Stainless steel.
11. Trap Pattern: Deep-seal P-trap or Standard P-trap.

2.8 FLOOR SINKS

A. Cast-Iron Floor Sinks:

1. Manufacturers: Subject to compliance with requirements, available manufacturers offering products that may be incorporated into the Work include, but are not limited to the following:

   a. Jay R. Smith Mfg. Co.
   b. MIFAB, Inc.
   c. Watts; a Watts Water Technologies company.
   d. Zurn Industries, LLC.

2. Standard: ASME A112.6.7.
3. Pattern: Floor drain.
4. Body Material: Cast iron.
5. Anchor Flange: As Required, with seepage holes.

6. Clamping Device: As Required.
7. Outlet: Bottom, no-hub connection.
8. Coating on Interior Surfaces: Acid-resistant enamel.
9. Sediment Bucket: Not required.
10. Internal Strainer: Dome or Flat.
11. Internal Strainer Material: Aluminum.
12. Top Grate Material: Cast iron, loose.
13. Top of Body and Grate Finish: Nickel bronze, Acid-resistant enamel.
14. Top Shape: Square.
15. Dimensions of Top Grate: Refer to Plumbing Fixture Schedule on Construction plans.
16. Top Loading Classification: No traffic.
17. Funnel: Not required.

PART 3 - EXECUTION

3.1 INSTALLATION

A. Equipment Mounting:

1. Comply with requirements for vibration-isolation and seismic-control devices specified in Section 220548 "Vibration and Seismic Controls for Plumbing Piping and Equipment."
2. Comply with requirements for vibration-isolation devices specified in Section 220548.13 "Vibration Controls for Plumbing Piping and Equipment."

B. Install backwater valves in building drain piping.

1. For interior installation, provide cleanout deck plate flush with floor and centered over backwater valve cover, and of adequate size to remove valve cover for servicing.

C. Install cleanouts in building drain piping according to the following, unless otherwise indicated:

1. Size same as drainage piping up to NPS 4. Use NPS 4 for larger drainage piping unless larger cleanout is indicated.
2. Locate at each change in direction of piping greater than 135 degrees.
3. Locate at minimum intervals of 50 feet for piping NPS 4 and smaller and 100 feet for larger piping.
4. Locate at base of each vertical soil and waste stack.
5. At each horizontal drainage pipe upper terminal.
6. Above each Urinal.

D. For floor cleanouts for piping below floors, install cleanout deck plates with top flush with finished floor.

E. For cleanouts located in concealed piping, install cleanout wall access covers, of types indicated, with frame and cover flush with finished wall.

F. Install roof flashing assemblies on sanitary stack vents and vent stacks that extend through roof. Comply with requirements in Section 076200 "Sheet Metal Flashing and Trim."

G. Install flashing fittings on sanitary stack vents and vent stacks that extend through roof. Comply with requirements in Section 076200 "Sheet Metal Flashing and Trim."

H. Install through-penetration firestop assemblies in plastic conductors and stacks at floor penetrations.

1. Comply with requirements in Section 078413 "Penetration Firestopping."

I. Install deep-seal traps on floor drains and other waste outlets, if indicated.

J. Install floor-drain, trap-seal primer fittings on inlet to floor drains that require trap-seal primer connection.

1. Exception: Fitting may be omitted if trap has trap-seal primer connection.
2. Size: Same as floor drain inlet.

K. Install air-gap fittings on draining-type backflow preventers and on indirect-waste piping discharge into sanitary drainage system.

L. Install sleeve and sleeve seals with each riser and stack passing through floors with waterproof membrane.

M. Install vent caps on each vent pipe passing through roof.

N. In freeze prone areas install frost-resistant vent terminals on each vent pipe passing through roof. Maintain 1-inch clearance between vent pipe and roof substrate.

O. Install expansion joints on vertical stacks and conductors. Position expansion joints for easy access and maintenance.

P. In freeze prone areas install frost-proof vent caps on each vent pipe passing through roof. Maintain 1-inch clearance between vent pipe and roof substrate.

Q. Install wood-blocking reinforcement for wall-mounting-type specialties.

R. Install traps on plumbing specialty drain outlets. Omit traps on indirect wastes unless trap is indicated.

S. Install floor drains at low points of surface areas to be drained. Set grates of drains flush with finished floor, unless otherwise indicated.

1. Install floor-drain flashing collar or flange, so no leakage occurs between drain and adjoining flooring.

a. Maintain integrity of waterproof membranes where penetrated.

2. Install individual traps for floor drains connected to sanitary building drain, unless otherwise indicated.

3.2 CONNECTIONS

A. Comply with requirements in Section 221316 "Sanitary Waste and Vent Piping" for piping installation requirements. Drawings indicate general arrangement of piping, fittings, and specialties.

B. Install piping adjacent to equipment to allow service and maintenance.

C. Ground equipment according to Section 260526 "Grounding and Bonding for Electrical Systems."

D. Connect wiring according to Section 260519 "Low-Voltage Electrical Power Conductors and Cables."

E. Comply with requirements in Section 221316 "Sanitary Waste and Vent Piping" for piping installation requirements. Drawings indicate general arrangement of piping, fittings, and specialties.

F. Comply with requirements in Section 221319 "Sanitary Waste Piping Specialties" for backwater valves, air admittance devices and miscellaneous sanitary drainage piping specialties.

3.3 FLASHING INSTALLATION

A. Comply with requirements in Section 076200 "Sheet Metal Flashing and Trim."

B. Fabricate flashing from single piece unless large pans, sumps, or other drainage shapes are required.

C. Install sheet flashing on pipes, sleeves, and specialties passing through or embedded in floors and roofs with waterproof membrane.

1. Pipe Flashing: Sleeve type, matching pipe size, with minimum length of 10 inches, and skirt or flange extending at least 8 inches around pipe.
2. Sleeve Flashing: Flat sheet, with skirt or flange extending at least 8 inches around sleeve.
3. Embedded Specialty Flashing: Flat sheet, with skirt or flange extending at least 8 inches around specialty.

D. Set flashing on floors and roofs in solid coating of bituminous cement.

E. Secure flashing into sleeve and specialty clamping ring or device.

F. Install flashing for piping passing through roofs with counterflashing or commercially made flashing fittings, according to Section 076200 "Sheet Metal Flashing and Trim."

G. Extend flashing up vent pipe passing through roofs and turn down into pipe, or secure flashing into cast-iron sleeve having calking recess.

3.4 LABELING AND IDENTIFYING

A. Equipment Nameplates and Signs: Install engraved plastic-laminate equipment nameplate or sign on or near each of the equipment.

B. Distinguish among multiple units, inform operator of operational requirements, indicate safety and emergency precautions, and warn of hazards and improper operations, in addition to identifying unit.

1. Nameplates and signs are specified in Section 220553 "Identification for Plumbing Piping and Equipment."

3.5 FIELD QUALITY CONTROL

A. Perform tests and inspections, and prepare test reports.

B. Tests and Inspections:

1. Leak Test: After installation, charge system and test for leaks. Repair leaks and retest until no leaks exist.
2. Test and adjust controls and safeties. Replace damaged and malfunctioning controls and equipment.

3.6 PROTECTION

A. Protect drains during remainder of construction period to avoid clogging with dirt or debris and to prevent damage from traffic or construction work.

B. Place plugs in ends of uncompleted piping at end of each day or when work stops.

3.7 DEMONSTRATION

A. Engage a factory-authorized service representative to train Owner's maintenance personnel to adjust, operate, and maintain FOG disposal systems. Refer to Section 017900 "Demonstration and Training."

END OF SECTION 221319

SECTION 221413 - FACILITY STORM DRAINAGE PIPING

PART 1 - GENERAL

1.1 RELATED DOCUMENTS

A. Drawings and general provisions of the Contract, including General and Supplementary Conditions and Division 01 Specification Sections, apply to this Section.

1.2 SUMMARY

A. Section Includes:

1. Hubless, cast-iron soil pipe and fittings.
2. Galvanized-steel pipe and fittings.
3. Ductile-iron pipe and fittings.
4. Copper tube and fittings.
5. ABS pipe and fittings.
6. PVC pipe and fittings.
7. Specialty pipe and fittings.
8. Encasement for underground metal piping.

B. Related Requirements:

1. Section 221429 "Sump Pumps" for storm drainage pumps.
2. Section 334400 "Stormwater Utility Equipment" for storm drainage piping outside the building.

1.3 ACTION SUBMITTALS

A. Submittals shall be formatted per Section 220000 “General Plumbing Requirements”. The manufacturer shall resubmit the specification section showing compliance with each respective paragraphs and specified items and features in that particular specification section. All **exceptions** shall be clearly identified by referencing respective paragraph and other requirements. Next to each specification item, indicate the following:

1. “No Exception Taken”.
2. “Exception”. All exceptions shall be clearly identified by referencing respective paragraph and other requirements along with proposed alternative.

B. Product Data: For each type of product.

C. Sustainable Design Submittals:

1. Product Data: For adhesives, indicating VOC content.

2. Laboratory Test Reports: For adhesives, indicating compliance with requirements for low-emitting materials.

D. Shop Drawings: For controlled-flow siphonic roof drainage system. Include calculations, plans, and details.

1.4 INFORMATIONAL SUBMITTALS

A. Coordination Drawings: Detail storm drainage piping. Show support locations, type of support, weight on each support, required clearances, and other details, drawn to scale, on which the following items are shown and coordinated with each other, using input from installers of the items involved:

1. Structural members to which drainage piping will be attached or suspended from.

B. Field quality-control reports.

1.5 QUALITY ASSURANCE

A. Piping materials shall bear label, stamp, or other markings of specified testing agency.

1.6 FIELD CONDITIONS

A. Interruption of Existing Storm Drainage Service: Do not interrupt service to facilities occupied by Owner or others unless permitted under the following conditions and then only after arranging to provide temporary service according to requirements indicated:

1. Notify Architect Owner no fewer than two days in advance of proposed interruption of storm drainage service.
2. Do not proceed with interruption of storm drainage service without Architect's Owner's written permission.

PART 2 - PRODUCTS

2.1 PERFORMANCE REQUIREMENTS

A. Components and installation shall be capable of withstanding the following minimum working pressure unless otherwise indicated:

1. Storm Drainage Piping: 10-foot head of water.

2.2 HUBLESS, CAST-IRON SOIL PIPE AND FITTINGS

A. Manufacturers: Subject to compliance with requirements, provide products by one of the following:

1. AB & I Foundry; a part of the McWane family of companies.
2. Charlotte Pipe and Foundry Company.
3. NewAge Casting.
4. Tyler Pipe; a part of McWane family of companies.

B. Pipe and Fittings:

1. Marked with CISPI collective trademark and NSF certification mark.
2. Standard: ASTM A888 or CISPI 301.

C. CISPI, Hubless-Piping Couplings:

1. Manufacturers: Subject to compliance with requirements, provide products by one of the following:

   a. ANACO-Husky.
   b. Charlotte Pipe and Foundry Company.
   c. Dallas Specialty & Mfg. Co.
   d. Fernco Inc.
   e. Ideal Clamp Products, Inc.
   f. Matco-Norca.
   g. MIFAB, Inc.
   h. Mission Rubber Company, LLC; a division of MCP Industries.
   i. NewAge Casting.
   j. Tyler Pipe; a subsidiary of McWane Inc.

2. Couplings shall bear CISPI collective trademark and NSF certification mark.
3. Standards: ASTM C1277 and CISPI 310.
4. Description: Stainless-steel corrugated shield with stainless-steel bands and tightening devices; and ASTM C564, rubber sleeve with integral, center pipe stop.

D. Heavy-Duty, Hubless-Piping Couplings:

1. Manufacturers: Subject to compliance with requirements, provide products by one of the following:

   a. ANACO-Husky.
   b. Charlotte Pipe and Foundry Company.
   c. Clamp-All Corp.
   d. Dallas Specialty & Mfg. Co.
   e. Ideal Clamp Products, Inc.
   f. MIFAB, Inc.
   g. Mission Rubber Company, LLC; a division of MCP Industries.
   h. NewAge Casting.
   i. Tyler Pipe; a subsidiary of McWane Inc.

2. Standard: ASTM C1540..
3. Description: Stainless-steel shield with stainless-steel bands and tightening devices; and ASTM C564, rubber sleeve with integral, center pipe stop.

E. Cast-Iron, Hubless-Piping Couplings:

1. Manufacturers: Subject to compliance with requirements, provide products by one of the following:

   a. Charlotte Pipe and Foundry Company.
   b. MG Piping Products Company.

2. Standard: ASTM C1277..
3. Description: Two-piece ASTM A48/A48M, cast-iron housing; stainless-steel bolts and nuts; and ASTM C564, rubber sleeve with integral, center pipe stop.

2.3 GALVANIZED-STEEL PIPE AND FITTINGS

A. Manufacturers: Subject to compliance with requirements, provide products by one of the following:

1. Tubular USA.
2. U.S. Steel.
3. Wheatland Tube Company.

B. Pipe: ASTM A53/A53M, Type E, Standard Weight class. Include square-cut-grooved or threaded ends matching joining method.

C. Cast-Iron Drainage Fittings: ASME B16.12, threaded.

D. Steel-Pipe Pressure Fittings:

1. Steel Pipe Nipples: ASTM A733, made of ASTM A53/A53M or ASTM A106/A106M, Schedule 40, seamless steel pipe. Include ends matching joining method.
2. Malleable-Iron Unions: ASME B16.39; Class 150; hexagonal-stock body with ball-and-socket, metal-to-metal, bronze seating surface; and female threaded ends.
3. Gray-Iron, Threaded Fittings: ASME B16.4, Class 125, standard pattern.

E. Cast-Iron Flanges: ASME B16.1, Class 125.

1. Flange Gasket Materials: ASME B16.21, full-face, flat, nonmetallic, asbestos-free, 1/8-inch maximum thickness unless thickness or specific material is indicated.
2. Flange Bolts and Nuts: ASME B18.2.1, carbon steel unless otherwise indicated.

F. Grooved-Joint, Galvanized-Steel-Pipe Appurtenances

1. Manufacturers: Subject to compliance with requirements, provide products by one of the following:

   a. Anvil International.
   b. Grinnell G-Fire by Johnson Controls Company.
   c. Shurjoint-Apollo Piping Products USA Inc.
   d. Smith-Cooper International.

e. Victaulic Company.

2. Galvanized, Grooved-End Fittings for Galvanized-Steel Piping: ASTM A536 ductile-iron castings, ASTM A47/A47M malleable-iron castings, ASTM A234/A234M forged-steel fittings, or ASTM A106/A106M steel pipes with dimensions matching ASTM A53/A53M steel pipe, and complying with AWWA C606 for grooved ends.

3. Grooved Mechanical Couplings for Galvanized-Steel Piping: ASTM F1476, Type I. Include ferrous housing sections with continuous curved keys; EPDM-rubber gasket suitable for hot and cold water; and bolts and nuts.

2.4 DUCTILE-IRON PIPE AND FITTINGS

A. Manufacturers: Subject to compliance with requirements, provide products by one of the following:

1. American Ductile Iron Pipe.
2. McWane Ductile.
3. U.S. Pipe and Foundry Company.

B. Ductile-Iron, Mechanical-Joint Piping:

1. Ductile-Iron Pipe: AWWA C151/A21.51, with mechanical-joint bell and plain spigot end unless grooved or flanged ends are indicated.
2. Ductile-Iron Fittings: AWWA C110/A21.10, mechanical-joint ductile- or gray-iron standard pattern or AWWA C153/A21.53, ductile-iron compact pattern.
3. Glands, Gaskets, and Bolts: AWWA C111/A21.11, ductile- or gray-iron glands, rubber gaskets, and steel bolts.

C. Ductile-Iron, Push-on-Joint Piping:

1. Ductile-Iron Pipe: AWWA C151/A21.51, with push-on-joint bell and plain spigot end unless grooved or flanged ends are indicated.
2. Ductile-Iron Fittings: AWWA C110/A21.10, push-on-joint ductile- or gray-iron standard pattern or AWWA C153/A21.53, ductile-iron compact pattern.
3. Gaskets: AWWA C111/A21.11, rubber.

D. Ductile-Iron, Grooved-Joint Piping:

1. Ductile-Iron Pipe: AWWA C151/A21.51, with round-cut-grooved ends according to AWWA C606.
2. Ductile-Iron, Grooved-End Pipe Appurtenances:

a. Manufacturers: Subject to compliance with requirements, provide products by one of the following:

1) Anvil International.
2) Shurjoint-Apollo Piping Products USA Inc.
3) Smith-Cooper International.

4) Star Pipe Products.
5) Victaulic Company.

b. Grooved-End, Ductile-Iron Fittings: ASTM A536, ductile-iron castings with dimensions matching AWWA C110/A21.10, ductile-iron pipe or AWWA C153/A21.53, ductile-iron fittings; complying with AWWA C606 for grooved ends.
c. Grooved Mechanical Couplings for Ductile-Iron Pipe: ASTM F1476, Type I. Include ferrous housing sections with continuous curved keys; EPDM-rubber center-leg gasket suitable for hot and cold water; and bolts and nuts.

2.5 COPPER TUBE AND FITTINGS

A. Manufacturers: Subject to compliance with requirements, provide products by one of the following:

1. Cambridge-Lee Industries, LLC.
2. Cerro Flow Products, LLC.
3. Mueller Industries, Inc.
4. Wieland Copper Products, LLC.

B. Copper Type DWV Tube: ASTM B306, drainage tube, drawn temper.

C. Copper Drainage Fittings: ASME B16.23, cast-copper fittings or ASME B16.29, wrought-copper, solder-joint fittings.

D. Hard Copper Tube: ASTM B88, Type L, water tube, drawn temper.

E. Soft Copper Tube: ASTM B88, Type L, water tube, annealed temper.

F. Copper Pressure Fittings:

1. Copper Fittings: ASME B16.18, cast-copper-alloy fittings or ASME B16.22, wrought-copper, solder-joint fittings. Furnish wrought-copper fittings if indicated.
2. Copper Unions: MSS SP-123, copper-alloy, hexagonal-stock body with ball-and-socket, metal-to-metal seating surfaces, and solder-joint or threaded ends.

G. Copper Flanges: ASME B16.24, Class 150, cast copper with solder-joint end.

1. Flange Gasket Materials: ASME B16.21, full-face, flat, nonmetallic, asbestos-free, 1/8-inch maximum thickness unless thickness or specific material is indicated.
2. Flange Bolts and Nuts: ASME B18.2.1, carbon steel unless otherwise indicated.

H. Solder: ASTM B32, lead free with ASTM B813, water-flushable flux.

2.6 ABS PIPE AND FITTINGS

A. Manufacturers: Subject to compliance with requirements, provide products by one of the following:

1. Charlotte Pipe and Foundry Company.
2. JM Eagle.
3. Mueller Industries, Inc.
4. Rocky Mountain Colby Pipe Company.
5. Royal Building Products.

B. NSF Marking: Comply with NSF 14, "Plastics Piping System Components and Related Materials," for plastic piping components. Include marking with "NSF-drain" for plastic storm drain and "NSF-sewer" for plastic storm sewer piping.

C. Solid-Wall ABS Pipe: ASTM D2661, Schedule 40.

D. Cellular-Core ABS Pipe: ASTM F628, Schedule 40.

E. ABS Socket Fittings: ASTM D2661, made to ASTM D3311, drain, waste, and vent patterns.

F. Solvent Cement: ASTM D2235.

1. Solvent cement shall have a VOC content of 325 g/L or less.
2. Solvent cement shall comply with the testing and product requirements of the California Department of Public Health's "Standard Method for the Testing and Evaluation of Volatile Organic Chemical Emissions from Indoor Sources Using Environmental Chambers."

2.7 PVC PIPE AND FITTINGS

A. Manufacturers: Subject to compliance with requirements, provide products by one of the following:

1. Charlotte Pipe and Foundry Company.
2. GF Piping Systems.
3. JM Eagle.
4. Mueller Industries, Inc.
5. National Pipe and Plastic, Inc.
6. North America Pipe Corporation.
7. Rocky Mountain Colby Pipe Company.
8. Silver-line Plastics.

B. NSF Marking: Comply with NSF 14, "Plastics Piping Systems Components and Related Materials," for plastic piping components. Include marking with "NSF-drain" for plastic storm drain and "NSF-sewer" for plastic storm sewer piping.

C. Solid-Wall PVC Pipe: ASTM D2665; drain, waste, and vent.

D. Cellular-Core PVC Pipe: ASTM F891, Schedule 40.

E. PVC Socket Fittings: ASTM D2665, made to ASTM D3311, drain, waste, and vent patterns and to fit Schedule 40 pipe.

F. Adhesive Primer: ASTM F656.

1. <Double click to insert sustainable design text for adhesive primer.>
2. Adhesive primer shall comply with the testing and product requirements of the California Department of Public Health's "Standard Method for the Testing and Evaluation of Volatile Organic Chemical Emissions from Indoor Sources Using Environmental Chambers."

G. Solvent Cement: ASTM D2564.

1. Solvent cement shall have a VOC content of 510 g/L or less.

2.8 SPECIALTY PIPE FITTINGS

A. Transition Couplings:

1. General Requirements: Fitting or device for joining piping with small differences in ODs or of different materials. Include end connections same size as and compatible with pipes to be joined.
2. Fitting-Type Transition Couplings: Manufactured piping coupling or specified-piping-system fitting.
3. Unshielded, Nonpressure Transition Couplings:

a. Manufacturers: Subject to compliance with requirements, provide products by one of the following:

1) Dallas Specialty & Mfg. Co.
2) Fernco Inc.
3) Mission Rubber Company, LLC; a division of MCP Industries.
4) Plastic Oddities.

b. Standard: ASTM C1173.
c. Description: Elastomeric sleeve, reducing or transition pattern. Include shear ring and corrosion-resistant-metal tension band and tightening mechanism on each end.
d. Sleeve Materials:

1) For Cast-Iron Soil Pipes: ASTM C564, rubber.
2) For Plastic Pipes: ASTM F477, elastomeric seal or ASTM D5926, PVC.
3) For Dissimilar Pipes: ASTM D5926, PVC or other material compatible with pipe materials being joined.

4. Shielded, Nonpressure Transition Couplings:

a. Manufacturers: Subject to compliance with requirements, provide products by one of the following:

1) Cascade Waterworks Mfg. Co.

2) Mission Rubber Company, LLC; a division of MCP Industries.

b. Standard: ASTM C1460.
c. Description: Elastomeric or rubber sleeve with full-length, corrosion-resistant outer shield and corrosion-resistant-metal tension band and tightening mechanism on each end.
d. End Connections: Same size as and compatible with pipes to be joined.

5. Pressure Transition Couplings:

a. Manufacturers: Subject to compliance with requirements, provide products by one of the following:

1) Cascade Waterworks Mfg. Co.
2) EBAA Iron, Inc.
3) Ford Meter Box Company, Inc. (The).
4) JCM Industries, Inc.
5) Romac Industries, Inc.

b. Standard: AWWA C219.
c. Description: Metal, sleeve-type couplings same size as pipes to be joined, and with pressure rating at least equal to and ends compatible with pipes to be joined.
d. Center-Sleeve Material: Manufacturer's standard Carbon steel Stainless steel Ductile iron Malleable iron.
e. Gasket Material: Natural or synthetic rubber.
f. Metal Component Finish: Corrosion-resistant coating or material.

B. Dielectric Fittings:

1. General Requirements: Assembly of copper alloy and ferrous materials with separating nonconductive insulating material. Include end connections compatible with pipes to be joined.
2. Dielectric Unions:

a. Manufacturers: Subject to compliance with requirements, provide products by one of the following:

1) A.Y. McDonald Mfg. Co.
2) Capitol Manufacturing Company.
3) Central Plastics Company.
4) HART Industrial Unions, LLC.
5) Jomar Valve.
6) Matco-Norca.
7) WATTS.
8) Zurn Industries, LLC.

b. Description:

1) Standard: ASSE 1079.
2) Pressure Rating: 150 psig minimum at 180 deg F.

3) End Connections: Solder-joint copper alloy and threaded ferrous.

3. Dielectric Flanges:

a. Manufacturers: Subject to compliance with requirements, provide products by one of the following:

1) Central Plastics Company.
2) Matco-Norca.
3) WATTS.
4) Zurn Industries, LLC.

b. Description:

1) Standard: ASSE 1079.
2) Factory-fabricated, bolted, companion-flange assembly.
3) Pressure Rating: 150 psig minimum at 180 deg F.
4) End Connections: Solder-joint copper alloy and threaded ferrous; threaded solder-joint copper alloy and threaded ferrous.

4. Dielectric-Flange Insulating Kits:

a. Manufacturers: Subject to compliance with requirements, provide products by one of the following:

1) Advance Products & Systems, Inc.
2) Calpico, Inc.
3) Central Plastics Company.
4) GPT; an EnPro Industries company.

b. Description:

1) Nonconducting materials for field assembly of companion flanges.
2) Pressure Rating: 150 psig.
3) Gasket: Neoprene or phenolic.
4) Bolt Sleeves: Phenolic or polyethylene.
5) Washers: Phenolic with steel-backing washers.

5. Dielectric Nipples:

a. Manufacturers: Subject to compliance with requirements, provide products by one of the following:

1) Grinnell G-Fire by Johnson Controls Company.
2) Matco-Norca.
3) Precision Plumbing Products.
4) Victaulic Company.

b. Description: Electroplated steel nipple.
c. Standard: IAPMO PS 66.

d. Pressure Rating: 300 psig at 225 deg F.
e. End Connections: Male threaded or grooved.
f. Lining: Inert and noncorrosive, propylene.

2.9 ENCASEMENT FOR UNDERGROUND METAL PIPING

A. Standard: ASTM A674 or AWWA C105/A 21.5.

B. Material: High-density, crosslaminated polyethylene film of 0.004-inch or linear low-density polyethylene film of 0.008-inch minimum thickness.

C. Form: tube.

D. Color: Black or natural.

PART 3 - EXECUTION

3.1 EARTH MOVING

A. Comply with requirements for excavating, trenching, and backfilling specified in Section 312000 "Earth Moving."

3.2 PIPING INSTALLATION

A. Drawing plans, schematics, and diagrams indicate general location and arrangement of piping systems.

1. Indicated locations and arrangements were used to size pipe and calculate friction loss, expansion, pump sizing, and other design considerations.
2. Install piping as indicated unless deviations from layout are approved on coordination drawings.

B. Install piping in concealed locations unless otherwise indicated and except in equipment rooms and service areas.

C. Install piping indicated to be exposed and piping in equipment rooms and service areas at right angles or parallel to building walls. Diagonal runs are prohibited unless specifically indicated otherwise.

D. Install piping above accessible ceilings to allow sufficient space for ceiling panel removal.

E. Install piping to permit valve servicing.

F. Cover all roof and overflow drains during constructions to prevent debris from entering pipe and protect grates from damages.

G. Install piping at indicated slopes.

H. Install piping free of sags and bends.

I. Install fittings for changes in direction and branch connections.

J. Install piping to allow application of insulation.

K. Install seismic restraints on piping. Comply with requirements for seismic-restraint devices specified in Section 220548 "Vibration and Seismic Controls for Plumbing Piping and Equipment."

L. Make changes in direction for piping using appropriate branches, bends, and long-sweep bends.

1. Do not change direction of flow more than 90 degrees.
2. Use proper size of standard increasers and reducers if pipes of different sizes are connected.

a. Reducing size of drainage piping in direction of flow is prohibited.

M. Lay buried building piping beginning at low point of each system.

1. Install true to grades and alignment indicated, with unbroken continuity of invert. Place hub ends of piping upstream.
2. Install required gaskets according to manufacturer's written instructions for use of lubricants, cements, and other installation requirements.
3. Maintain swab in piping and pull past each joint as completed.

N. Install piping at the following minimum slopes unless otherwise indicated:

1. Building Storm Drain: 2 percent downward in direction of flow for piping NPS 3 and smaller; 2 percent downward in direction of flow for piping NPS 4 and larger.
2. Horizontal Storm Drainage Piping: 2 percent downward in direction of flow.

O. Install cast-iron soil piping according to CISPI's "Cast Iron Soil Pipe and Fittings Handbook," Chapter IV, "Installation of Cast Iron Soil Pipe and Fittings."

1. Install encasement on underground piping according to ASTM A674 or AWWA C105/A 21.5.

P. Install steel piping according to applicable plumbing code.

Q. Install aboveground copper tubing according to CDA's "Copper Tube Handbook."

R. Install aboveground ABS piping according to ASTM D2661.

S. Install aboveground PVC piping according to ASTM D2665.

T. Install underground ABS and PVC piping according to ASTM D2321.

U. Install underground, copper, force-main tubing according to CDA's "Copper Tube Handbook."

1. Install encasement on piping according to ASTM A674 or AWWA C105/A 21.5.

V. Plumbing Specialties:

1. Install backwater valves in storm drainage gravity-flow piping.

   a. Comply with requirements for backwater valves specified in Section 221423 "Storm Drainage Piping Specialties."

2. Install cleanouts at grade and extend to where building storm drains connect to building storm sewers in storm drainage gravity-flow piping.

   a. Install cleanout fitting with closure plug inside the building in storm drainage force-main piping.
   b. Comply with requirements for cleanouts specified in Section 221423 "Storm Drainage Piping Specialties."

3. Install drains in storm drainage gravity-flow piping.

   a. Comply with requirements for drains specified in Section 221423 "Storm Drainage Piping Specialties."

W. Do not enclose, cover, or put piping into operation until it is inspected and approved by authorities having jurisdiction.

X. Install sleeves for piping penetrations of walls, ceilings, and floors.

1. Comply with requirements for sleeves specified in Section 220517 "Sleeves and Sleeve Seals for Plumbing Piping."

Y. Install sleeve seals for piping penetrations of concrete walls and slabs.

1. Comply with requirements for sleeve seals specified in Section 220517 "Sleeves and Sleeve Seals for Plumbing Piping."

Z. Install escutcheons for piping penetrations of walls, ceilings, and floors.

1. Comply with requirements for escutcheons specified in Section 220518 "Escutcheons for Plumbing Piping."

3.3 JOINT CONSTRUCTION

A. Hubless, Cast-Iron Soil Piping Coupled Joints:

1. Join according to CISPI 310 and CISPI's "Cast Iron Soil Pipe and Fittings Handbook" for hubless-piping coupling joints.

B. Threaded Joints: Thread pipe with tapered pipe threads according to ASME B1.20.1.

1. Cut threads full and clean using sharp dies.
2. Ream threaded pipe ends to remove burrs and restore full ID. Join pipe fittings and valves as follows:

a. Apply appropriate tape or thread compound to external pipe threads unless dry seal threading is specified.
b. Damaged Threads: Do not use pipe or pipe fittings with threads that are corroded or damaged.
c. Do not use pipe sections that have cracked or open welds.

C. Join copper tube and fittings with soldered joints according to ASTM B828 procedure. Use ASTM B813, water-flushable, lead-free flux and ASTM B32, lead-free-alloy solder.

D. Grooved Joints: Cut groove ends of pipe according to AWWA C606. Lubricate and install gasket over ends of pipes or pipe and fittings. Install coupling housing sections, over gasket, with keys seated in piping grooves. Install and tighten housing bolts.

E. Flanged Joints: Align bolt holes. Select appropriate gasket material, size, type, and thickness. Install gasket concentrically positioned. Use suitable lubricants on bolt threads. Torque bolts in cross pattern.

F. Plastic, Nonpressure-Piping, Solvent-Cemented Joints: Clean and dry joining surfaces. Join pipe and fittings according to the following:

1. Comply with ASTM F402 for safe-handling practice of cleaners, primers, and solvent cements.
2. ABS Piping: Join according to ASTM D2235 and ASTM D2661 appendices.
3. PVC Piping: Join according to ASTM D2855 and ASTM D2665 appendices.

G. Joint Restraints and Sway Bracing:

1. Provide joint restraints and sway bracing for storm drainage piping joints to comply with the following conditions:

a. Provide axial restraint for pipe and fittings 5 inches and larger, upstream and downstream of all changes in direction, branches, and changes in diameter greater than two pipe sizes.
b. Provide rigid sway bracing for pipe and fittings 4 inches and larger, upstream and downstream of all changes in direction 45 degrees and greater.
c. Provide rigid sway bracing for pipe and fittings 5 inches and larger, upstream and downstream of all changes in direction and branch openings.

3.4 SPECIALTY PIPE FITTING INSTALLATION

A. Transition Couplings:

1. Install transition couplings at joints of piping with small differences in ODs.
2. In Drainage Piping: Shielded, nonpressure transition couplings.
3. In Aboveground Force-Main Piping: Fitting-type transition couplings.
4. In Underground Force-Main Piping:

a. NPS 1-1/2 and Smaller: Fitting-type transition couplings.
b. NPS 2 and Larger: Pressure transition couplings.

B. Dielectric Fittings:

1. Install dielectric fittings in piping at connections of dissimilar metal piping and tubing.
2. Dielectric Fittings for NPS 2 and Smaller: Use dielectric nipples.
3. Dielectric Fittings for NPS 2-1/2 to NPS 4: Use dielectric flanges.
4. Dielectric Fittings for NPS 5 and Larger: Use dielectric flange kits.

3.5 VALVE INSTALLATION

A. General valve installation requirements for general-duty valve installations are specified in the following Sections:

1. Section 220523 "General Duty Valves for Plumbing Piping."

B. Shutoff Valves:

1. Install shutoff valve on each sump pump discharge.
2. Install full port ball valve for piping NS 2 and smaller.
3. Install gate valve for piping NPS 2-1/2 and larger.

C. Check Valves: Install swing-check valve, between pump and shutoff valve, on each sump pump discharge.

D. Backwater Valves: Install backwater valves in piping subject to backflow.

1. Horizontal Piping: Horizontal backwater valves. Use normally closed type unless otherwise indicated.
2. Install backwater valves in accessible locations.
3. Comply with requirements for backwater valves specified in Section 221423 "Storm Drainage Piping Specialties."

3.6 HANGER AND SUPPORT INSTALLATION

A. Comply with requirements for seismic-restraint devices specified in Section 220548 "Vibration and Seismic Controls for Plumbing Piping and Equipment."

B. Comply with requirements for pipe hanger and support devices and installation specified in Section 220529 "Hangers and Supports for Plumbing Piping and Equipment."

1. Install carbon-steel pipe hangers for horizontal piping in noncorrosive environments.
2. Install stainless-steel fiberglass pipe hangers for horizontal piping in corrosive environments.
3. Install carbon-steel pipe support clamps for vertical piping in noncorrosive environments.
4. Install stainless-steel pipe support clamps for vertical piping in corrosive environments.
5. Vertical Piping: MSS Type 8 or Type 42, clamps.
6. Install individual, straight, horizontal piping runs:

   a. 100 Feet and Less: MSS Type 1, adjustable, steel clevis hangers.

b. Longer Than 100 Feet: MSS Type 43, adjustable roller hangers.
c. Longer Than 100 Feet if Indicated: MSS Type 49, spring cushion rolls.

7. Multiple, Straight, Horizontal Piping Runs 100 Feet or Longer: MSS Type 44, pipe rolls. Support pipe rolls on trapeze.
8. Base of Vertical Piping: MSS Type 52, spring hangers.

C. Support horizontal piping and tubing within 12 inches of each fitting and coupling.

D. Support vertical piping and tubing at base and at each floor.

E. Rod diameter may be reduced one size for double-rod hangers, with 3/8-inch minimum rods.

F. Install hangers for cast-iron soil piping with the following maximum horizontal spacing and minimum rod diameters:

1. NPS 1-1/2 and NPS 2: 60 inches with 3/8-inch rod.
2. NPS 3: 60 inches with 1/2-inch rod.
3. NPS 4 and NPS 5: 60 inches with 5/8-inch rod.
4. NPS 6 and NPS 8: 60 inches with 3/4-inch rod.
5. NPS 10 and NPS 12: 60 inches with 7/8-inch rod.
6. Spacing for 10-foot pipe lengths may be increased to 10 feet. Spacing for fittings is limited to 60 inches.

G. Install supports for vertical cast-iron soil piping every 15 feet.

H. Install hangers for steel piping with the following maximum horizontal spacing and minimum rod diameters:

1. NPS 1-1/4: 84 inches with 3/8-inch rod.
2. NPS 1-1/2: 108 inches with 3/8-inch rod.
3. NPS 2: 10 feet with 3/8-inch rod.
4. NPS 2-1/2: 11 feet with 1/2-inch rod.
5. NPS 3: 12 feet with 1/2-inch rod.
6. NPS 4 and NPS 5: 12 feet with 5/8-inch rod.
7. NPS 6 and NPS 8: 12 feet with 3/4-inch rod.
8. NPS 10 and NPS 12: 12 feet with 7/8-inch rod.

I. Install supports for vertical steel piping every 15 feet.

J. Install hangers for copper tubing with the following maximum horizontal spacing and minimum rod diameters:

1. NPS 1-1/4: 72 inches with 3/8-inch rod.
2. NPS 1-1/2 and NPS 2: 96 inches with 3/8-inch rod.
3. NPS 2-1/2: 108 inches with 1/2-inch rod.
4. NPS 3 to NPS 5: 10 feet with 1/2-inch rod.
5. NPS 6: 10 feet with 5/8-inch rod.
6. NPS 8: 10 feet with 3/4-inch rod.

K. Install supports for vertical copper tubing every 10 feet.

L. Install hangers for ABS and PVC piping with the following maximum horizontal spacing and minimum rod diameters:

1. NPS 1-1/2 and NPS 2: 48 inches with 3/8-inch rod.
2. NPS 3: 48 inches with 1/2-inch rod.
3. NPS 4 and NPS 5: 48 inches with 5/8-inch rod.
4. NPS 6 and NPS 8: 48 inches with 3/4-inch rod.
5. NPS 10 and NPS 12: 48 inches with 7/8-inch rod.

M. Install supports for vertical ABS and PVC piping every 48 inches.

N. Support piping and tubing not listed above according to MSS SP-58 and manufacturer's written instructions.

3.7 CONNECTIONS

A. Drawings indicate general arrangement of piping, fittings, and specialties.

B. Connect interior storm drainage piping to exterior storm drainage piping. Use transition fitting to join dissimilar piping materials.

C. Connect storm drainage piping to roof drains and storm drainage specialties.

1. Install test tees (wall cleanouts) in conductors near floor, and floor cleanouts with cover flush with floor.
2. Install horizontal backwater valves in pit with pit cover flush with floor.

3. Comply with requirements for backwater valves cleanouts and drains specified in Section 221423 "Storm Drainage Piping Specialties."

D. Where installing piping adjacent to equipment, allow space for service and maintenance.

E. Make connections according to the following unless otherwise indicated:

1. Install unions, in piping NPS 2 and smaller, adjacent to each valve and at final connection to each piece of equipment.
2. Install flanges, in piping NPS 2-1/2 and larger, adjacent to flanged valves and at final connection to each piece of equipment.

3.8 IDENTIFICATION

A. Identify exposed storm drainage piping.

B. Comply with requirements for identification specified in Section 220553 "Identification for Plumbing Piping and Equipment."

3.9 FIELD QUALITY CONTROL

A. During installation, notify authorities having jurisdiction at least 24 hours before inspection must be made. Perform tests specified below in presence of authorities having jurisdiction.

1. Roughing-in Inspection: Arrange for inspection of piping before concealing or closing-in after roughing-in.
2. Final Inspection: Arrange for final inspection by authorities having jurisdiction to observe tests specified below and to ensure compliance with requirements.

B. Test storm drainage piping according to procedures of authorities having jurisdiction or, in absence of published procedures, as follows:

1. Test for leaks and defects in new piping and parts of existing piping that have been altered, extended, or repaired.

    a. If testing is performed in segments, submit separate report for each test, complete with diagram of portion of piping tested.

2. Leave uncovered and unconcealed new, altered, extended, or replaced storm drainage piping until it has been tested and approved.

    a. Expose work that was covered or concealed before it was tested.

3. Test Procedure:

    a. Test storm drainage piping on completion of roughing-in.
    b. Close openings in piping system and fill with water to point of overflow, but not less than 10-foot head of water. From 15 minutes before inspection starts until completion of inspection, water level must not drop. Inspect joints for leaks.

4. Repair leaks and defects with new materials and retest piping, or portion thereof, until satisfactory results are obtained.
5. Prepare reports for tests and required corrective action.

C. Test force-main piping according to procedures of authorities having jurisdiction or, in absence of published procedures, as follows:

1. Leave uncovered and unconcealed new, altered, extended, or replaced force-main piping until it has been tested and approved.

    a. Expose work that was covered or concealed before it was tested.

2. Cap and subject piping to static-water pressure of 50 psig above operating pressure, without exceeding pressure rating of piping system materials.

    a. Isolate test source and allow to stand for four hours. Leaks and loss in test pressure constitute defects that must be repaired.

3. Repair leaks and defects with new materials and retest piping, or portion thereof, until satisfactory results are obtained.
4. Prepare reports for tests and required corrective action.

D. Piping will be considered defective if it does not pass tests and inspections.

E. Prepare test and inspection reports.

3.10 CLEANING AND PROTECTION

A. Clean interior of piping. Remove dirt and debris as work progresses.

B. Protect drains during remainder of construction period to avoid clogging with dirt and debris and to prevent damage from traffic and construction work.

C. Place plugs in ends of uncompleted piping at end of day and when work stops.

3.11 PIPING SCHEDULE

A. Flanges and unions may be used on aboveground pressure piping unless otherwise indicated.

B. Aboveground storm drainage piping NPS 6 and smaller shall be any of the following:

1. Service class, cast-iron soil pipe and fittings; gaskets; and gasketed joints.
2. Hubless, cast-iron soil pipe and fittings; CISPI, heavy-duty, hubless-piping couplings; and coupled joints.
3. Galvanized-steel pipe, drainage fittings, and threaded joints.
4. Copper Type DWV tube, copper drainage fittings, and soldered joints.

5. Solid-wall ABS pipe, ABS socket fittings, and solvent-cemented joints.
6. Solid-wall PVC pipe, PVC socket fittings, and solvent-cemented joints.
7. Dissimilar Pipe-Material Couplings: Shielded, nonpressure transition couplings.

C. Aboveground, storm drainage piping NPS 8 and larger shall be any of the following:

1. Service class, cast-iron soil pipe and fittings; gaskets; and gasketed joints.
2. Hubless, cast-iron soil pipe and fittings; CISPI, heavy-duty, hubless-piping couplings; and coupled joints.
3. Galvanized-steel pipe, drainage fittings, and threaded joints.

4. Copper Type DWV tube, copper drainage fittings, and soldered joints.
5. Solid-wall PVC pipe, PVC socket fittings, and solvent-cemented joints.
6. Dissimilar Pipe-Material Couplings: Shielded, nonpressure transition couplings.

D. Underground storm drainage piping NPS 6 and smaller shall be any of the following:

1. Extra Heavy Service class, cast-iron soil pipe and fittings; gaskets; and gasketed joints.

2. Hubless, cast-iron soil pipe and fittings; CISPI, heavy-duty, cast-iron, hubless-piping couplings; and coupled joints.

3. Solid-wall ABS pipe, ABS socket fittings, and solvent-cemented joints.
4. Solid-wall PVC pipe, PVC socket fittings, and solvent-cemented joints.
5. Dissimilar Pipe-Material Couplings: Shielded, nonpressure transition couplings.

E. Underground, storm drainage piping NPS 8 and larger shall be any of the following:

1. Extra Heavy Service class, cast-iron soil pipe and fittings; gaskets; and gasketed joints.
2. Hubless, cast-iron soil pipe and fittings; CISPI, heavy-duty, cast-iron, hubless-piping couplings; and coupled joints.
3. Solid-wall PVC pipe, PVC socket fittings, and solvent-cemented joints.
4. Cellular-core, sewer and drain series, PVC pipe; PVC socket fittings; and solvent-cemented joints.
5. Dissimilar Pipe-Material Couplings: Shielded, nonpressure transition couplings.

SECTION 221423 - STORM DRAINAGE PIPING SPECIALTIES

PART 1 - GENERAL

1.1 RELATED DOCUMENTS

A. Drawings and general provisions of the Contract, including General and Supplementary Conditions and Division 01 Specification Sections, apply to this Section.

1.2 SUMMARY

A. Section Includes:

1. Metal roof drains.
2. Plastic roof drains.
3. Miscellaneous storm drainage piping specialties.
4. Cleanouts.
5. Backwater valves.

B. Related Requirements:

1. Section 076200 "Sheet Metal Flashing and Trim" for penetrations of roofs.
2. Section 078413 "Penetration Firestopping" for firestopping roof penetrations.

1.3 ACTION SUBMITTALS

A. Submittals shall be formatted per Section 220000 “General Plumbing Requirements”. The manufacturer shall resubmit the specification section showing compliance with each respective paragraphs and specified items and features in that particular specification section. All **exceptions** shall be clearly identified by referencing respective paragraph and other requirements. Next to each specification item, indicate the following:

1. “No Exception Taken”.
2. “Exception”. All exceptions shall be clearly identified by referencing respective paragraph and other requirements along with proposed alternative.

B. Product Data: For each type of product.

1.4 QUALITY ASSURANCE

A. Drainage piping specialties shall bear label, stamp, or other markings of specified testing agency.

PART 2 - PRODUCTS

2.1 METAL ROOF DRAINS

A. Cast-Iron, Large-Sump, General-Purpose Roof Drains:

1. Manufacturers: Subject to compliance with requirements, provide products by one of the following:

   a. Jay R. Smith Mfg. Co.
   b. MIFAB, Inc.
   c. Zurn Industries, LLC.

2. Standard: ASME A112.6.4.
3. Body Material: Cast iron.
4. Dimension of Body: Nominal 14-to 16-inch diameter.
5. Combination Flashing Ring and Gravel Stop: Required.
6. Flow-Control Weirs: Required.
7. Outlet: Bottom or Side.
8. Outlet Type: No hubor Threaded.
9. Extension Collars: Required.
10. Underdeck Clamp: Required.
11. Sump Receiver Plate: Required.
12. Dome Material: Aluminum Cast iron PE.
13. Perforated Gravel Guard: Stainless steel.
14. Vandal-Proof Dome: [**Not required**] [**Required**].
15. Water Dam: Not required.

B. Cast-Iron, Medium-Sump, General-Purpose Roof Drains:

1. Manufacturers: Subject to compliance with requirements, provide products by one of the following:

   a. Jay R. Smith Mfg. Co.
   b. MIFAB, Inc.
   c. Zurn Industries, LLC.

2. Standard: ASME A112.6.4.
3. Body Material: Cast iron.
4. Dimension of Body: 8- to 12-inch diameter.
5. Combination Flashing Ring and Gravel Stop: Required.
6. Flow-Control Weirs: Required.
7. Outlet: Bottom or Side.
8. Outlet Type: No hubor Threaded.
9. Extension Collars: Required.
10. Underdeck Clamp: Required.
11. Sump Receiver Plate: Required.
12. Dome Material: Aluminum Cast iron PE.
13. Wire Mesh: Not required.

14. Perforated Gravel Guard: Stainless steel.
15. Vandal-Proof Dome: [**Not required**] [**Required**].
16. Water Dam: Not required.

C. Copper, Medium-Sump, General-Purpose Roof Drains:

1. Manufacturers: Subject to compliance with requirements, provide products by one of the following:

    a. Marathon Roofing Products.
    b. Menzies Metal Products.
    c. Thunderbird Products.

2. Standard: ASME A112.6.4.
3. Drain Body and Flange Material: Copper.
4. Dimension of Body: 8- to 12-inch diameter.
5. Combination Flashing Ring and Gravel Stop: Required.
6. Outlet: Bottom or Side.
7. Outlet Type: Threaded.
8. Extension Collars: Required.
9. Underdeck Clamp: Required.
10. Sump Receiver Plate: Required.
11. Dome Material: Aluminum.
12. Wire Mesh: Not required.
13. Perforated Gravel Guard: Stainless steel.
14. Vandal-Proof Dome: [**Not required**] [**Required**].
15. Water Dam: Not required.

D. Cast-Iron, Small-Sump, General-Purpose Roof Drains:

1. Manufacturers: Subject to compliance with requirements, provide products by one of the following:

    a. Jay R. Smith Mfg. Co.
    b. MIFAB, Inc.
    c. Zurn Industries, LLC.

2. Standard: ASME A112.6.4.
3. Body Material: Cast iron.
4. Dimension of Body: Nominal 8-inch diameter.
5. Combination Flashing Ring and Gravel Stop: Required.
6. Outlet: Bottom or Side.
7. Outlet Type: No hub Threaded.
8. Extension Collars: Required.
9. Underdeck Clamp: Required.
10. Sump Receiver Plate: Required.
11. Dome Material: Cast iron.
12. Wire Mesh: Not required.
13. Vandal-Proof Dome: [**Not required**] [**Required**].

E. Copper, Small-Sump, General-Purpose Roof Drains:

1. Manufacturers: Subject to compliance with requirements, provide products by the following:

   a. Menzies Metal Products.

2. Standard: ASME A112.6.4, for general-purpose roof drains.
3. Body Material: Copper.
4. Dimension of Body: Nominal 8-inch diameter.
5. Outlet: Bottom.
6. Outlet Type: O-ring.
7. Dome Material: Aluminum.
8. Vandal-Proof Dome: [**Not required**] [**Required**].

F. Metal, Cornice and Gutter Roof Drains:

1. Manufacturers: Subject to compliance with requirements, provide products by one of the following:

   a. Jay R. Smith Mfg. Co.
   b. MIFAB, Inc.
   c. Zurn Industries, LLC.

2. Standard: ASME A112.6.4.
3. Body Material: Cast iron.
4. Dimension of Body: Nominal 6-inch diameter.
5. Outlet Type: Threaded.
6. Dome Material: Aluminum.
7. Wire Mesh: Not required.
8. Vandal-Proof Dome: [**Not required**] [**Required**].

G. Metal, Parapet Roof Drains:

1. Manufacturers: Subject to compliance with requirements, provide products by one of the following:

   a. Jay R. Smith Mfg. Co.
   b. MIFAB, Inc.
   c. Zurn Industries, LLC.

2. Standard: ASME A112.6.4.
3. Body Material: Cast iron.
4. Outlet: Back Angle.
5. Outlet Type: Threaded.
6. Grate Material: Bronze Cast iron Nickel-bronze alloy.
7. Wire Mesh: Not required.
8. Vandal-Proof Grate: [**Not required**] [**Required**].

H. Metal, Large-Sump, Promenade Roof Drains:

1. Manufacturers: Subject to compliance with requirements, provide products by one of the following:

   a. Jay R. Smith Mfg. Co.
   b. MIFAB, Inc.
   c. Zurn Industries, LLC.

2. Standard: ASME A112.6.4.
3. Body Material: Cast iron.
4. Dimension of Body: Nominal 12- to 14-inch diameter.
5. Dimension of Frame and Grate: Nominal 12 to 14 inches square.
6. Outlet: Bottom Side.
7. Outlet Type: No hub Threaded.
8. Grate Material: Bronze Cast iron Nickel-bronze alloy.
9. Vandal-Proof Grate: [**Not required**] [**Required**].
10. Extension Collars: Required.
11. Underdeck Clamp: Required.
12. Sump Receiver Plate: Required.

I. Metal, Medium-Sump, Promenade Roof Drains:

1. Manufacturers: Subject to compliance with requirements, provide products by one of the following:

   a. Jay R. Smith Mfg. Co.
   b. MIFAB, Inc.
   c. Zurn Industries, LLC.

2. Standard: ASME A112.6.4.
3. Body Material: Cast iron.
4. Dimension of Body: 11- to 12-inch diameter.
5. Dimension of Frame and Grate: Nominal 12 inches square.
6. Outlet: Bottom Side.
7. Outlet Type: No hub Threaded.
8. Grate Material: Bronze Cast iron Nickel-bronze alloy.
9. Vandal-Proof Grate: [**Not required**] [**Required**].
10. Extension Collars: Required.
11. Underdeck Clamp: Required.
12. Sump Receiver Plate: Required.

J. Metal, Small-Sump, Promenade Roof Drains:

1. Manufacturers: Subject to compliance with requirements, provide products by one of the following:

   a. Jay R. Smith Mfg. Co.
   b. Josam Company.

c. Mifab, Inc.
d. Zurn Industries, LLC.

2. Standard: ASME A112.6.4.
3. Body Material: Cast iron.
4. Dimension of Body: Nominal 8-inch diameter.
5. Dimension of Frame and Grate: Nominal 8 inches square.
6. Outlet: Bottom.
7. Outlet Type: No hub Threaded
8. Grate Material: Bronze Cast iron Nickel-bronze alloy.
9. Vandal-Proof Grate: [**Not required**] [**Required**].
10. Extension Collars: Required.
11. Underdeck Clamp: Required.
12. Sump Receiver Plate: Required.

K. Metal, Medium-Sump, Deck Roof Drains:

1. Manufacturers: Subject to compliance with requirements, provide products by one of the following:

a. Jay R. Smith Mfg. Co.
b. MIFAB, Inc.
c. Zurn Industries, LLC.

2. Standard: ASME A112.6.4.
3. Body Material: Cast iron.
4. Flange: Anchor.
5. Clamping Device: Required.
6. Integral Backwater Valve: Not required.
7. Outlet: Bottom or Side.
8. Outlet Type: No hub Threaded.
9. Grate Material: Cast or ductile iron.
10. Grate Finish: [**Not required**] <**Insert finish**>.
11. Overall Dimension of Frame and Grate: Nominal 12 to 14 inches [**round**] [**square**].
12. Top-Loading Classification: Heavy Duty.
13. Vandal-Proof Frame and Grate: [**Not required**] [**Required**].

L. Metal, Small-Sump, Deck Roof Drains:

1. Manufacturers: Subject to compliance with requirements, provide products by one of the following:

a. Jay R. Smith Mfg. Co.
b. MIFAB, Inc.
c. Zurn Industries, LLC.

2. Standard: ASME A112.6.4.
3. Body Material: Metal.
4. Flange: Anchor.
5. Clamping Device: Required.

6. Integral Backwater Valve: Not required.
7. Outlet: Bottom Side.
8. Outlet Type: No hub Threaded.
9. Grate Material: Cast or ductile iron.
10. Grate Finish: [**Not required**] <**Insert finish**>.
11. Overall Dimension of Frame and Grate: Nominal 8 inches <**Insert dimension**> [**round**] [**square**].
12. Vandal-Proof Frame and Grate: [**Not required**] [**Required**].

2.2 PLASTIC ROOF DRAINS

A. Plastic Roof Drains:

1. Manufacturers: Subject to compliance with requirements, provide products by one of the following:

   a. Canplas LLC.
   b. LSP Products Group, Inc.
   c. Town & Country Plastics, Inc.

2. Standard: ASME A112.6.4.
3. Body Material: ABS or PVC.
4. Sump Diameter: <**Insert nominal dimension**>.
5. Combination Flashing Ring and Gravel Stop: Required.
6. Outlet: Bottom.
7. Outlet Type: <**Insert type**>.
8. Extension Collars: Required.
9. Underdeck Clamp: Required.
10. Sump Receiver Plate: Required.
11. Dome Material: Aluminum Cast iron Plastic.
12. Vandal-Proof Dome: [**Not required**] [**Required**].

2.3 MISCELLANEOUS STORM DRAINAGE PIPING SPECIALTIES

A. Downspout Adaptors:

1. Description: Manufactured, gray-iron casting, for attaching to horizontal-outlet, parapet roof drain and to exterior, sheet metal downspout.
2. Size: Inlet size to match parapet drain outlet.

B. Downspout Boots:

1. Manufacturers: Subject to compliance with requirements, provide products by one of the following:

   a. J.R. Hoe & Sons Inc.
   b. Neenah Foundry Company.

2. Description: Manufactured, ASTM A48/A48M, gray-iron casting, with strap or ears for attaching to building; NPS 4 outlet; and shop-applied bituminous coating.
3. Size: Inlet size to match downspout and NPS 4 outlet.

C. Conductor Nozzles:

1. Description: Bronze body with threaded inlet and bronze wall flange with mounting holes.
2. Size: Same as connected conductor.

2.4 CLEANOUTS

A. Cast-Iron Exposed Cleanouts:

1. Manufacturers: Subject to compliance with requirements, provide products by one of the following:

   a. Jay R. Smith Mfg. Co.
   b. MIFAB, Inc.
   c. Zurn Industries, LLC.

2. Standard: ASME A112.36.2M.
3. Size: Same as connected branch.
4. Body Material: Hub-and-spigot, cast-iron soil pipe T-branch No-hub, cast-iron soil pipe test tee as required to match connected piping.
5. Closure: Countersunk or raised-head, brass plug.
6. Closure Plug Size: Same as, or not more than, one size smaller than cleanout size.

B. Cast-Iron Exposed Floor Cleanouts:

1. Manufacturers: Subject to compliance with requirements, provide products by one of the following:
   a. Jay R. Smith Mfg. Co.
   b. Mifab, Inc.
   c. WATTS.
   d. Zurn Industries, LLC.

2. Standard: ASME A112.36.2M.
3. Size: Same as connected branch.
4. Type: Heavy-duty, adjustable housing Threaded, adjustable housing.
5. Body or Ferrule: Cast iron.
6. Clamping Device: Not required.
7. Outlet Connection: No hub Hub with gasket Threaded.
8. Closure: Brass plug with straight threads and gasket Brass plug with tapered threads Cast-iron plug Plastic plug.
9. Adjustable Housing Material: Cast iron Plastic with threads.
10. Frame and Cover Material and Finish: Nickel-bronze, copper alloy Painted cast iron Polished bronze Rough bronze.
11. Frame and Cover Shape: [**Round**] [**Square**].
12. Top Loading Classification: [**Extra-Heavy**] [**Heavy**] [**Medium**] Duty.

13. Riser: ASTM A74, Extra-Heavy Service class, cast-iron drainage pipe fitting and riser to cleanout.

C. Plastic Floor Cleanouts:

1. Manufacturers: Subject to compliance with requirements, provide products by one of the following:

   a. Canplas LLC.
   b. IPS Corporation.
   c. NDS Inc.

2. Size: Same as connected branch.
3. Body Material: PVC.
4. Closure Plug: PVC.
5. Riser: Drainage pipe fitting and riser to cleanout of same material as drainage piping.

D. Cast-Iron Wall Cleanouts:

1. Manufacturers: Subject to compliance with requirements, provide products by one of the following:

   a. Jay R. Smith Mfg. Co.
   b. MIFAB, Inc.
   c. Zurn Industries, LLC.

2. Standard: ASME A112.36.2M. Include wall access.
3. Size: Same as connected drainage piping.
4. Body: No-hub, cast-iron soil pipe test tee as required to match connected piping.
5. Closure Plug:

   a. Brass Cast iron.
   b. Countersunk or raised head.
   c. Drilled and threaded for cover attachment screw.
   d. Size: Same as, or not more than, one size smaller than cleanout size.

6. Wall Access: Round, flat, chrome-plated brass or stainless-steel cover plate with screw.
7. Wall Access: [**Round**] [**Square**], nickel-bronze, copper-alloy, or stainless-steel wall-installation frame and cover.

E. Test Tees:

1. Manufacturers: Subject to compliance with requirements, provide products by one of the following:

   a. Jay R. Smith Mfg. Co.
   b. MIFAB, Inc.
   c. Tyler Pipe; a subsidiary of McWane Inc.

2. Standard: ASME A112.36.2M and ASTM A74, ASTM A888, or CISPI 301.

3. Size: Same as connected drainage piping.
4. Body Material: Hub-and-spigot, cast-iron soil-pipe T-branch or no-hub, cast-iron soil-pipe test tee as required to match connected piping.
5. Closure Plug: Countersunk or raised head, brass.
6. Closure Plug Size: Same as, or not more than, one size smaller than cleanout size.

2.5 BACKWATER VALVES

A. Cast-Iron, Horizontal Backwater Valves:

1. Manufacturers: Subject to compliance with requirements, provide products by one of the following:

   a. Jay R. Smith Mfg. Co.
   b. MIFAB, Inc.
   c. Zurn Industries, LLC.

2. Standard: ASME A112.14.1.
3. Size: Same as connected piping.
4. Body Material: Cast iron.
5. Cover: Cast iron with bolted or threaded access check valve.
6. End Connections: no hub.
7. Check Valve: Removable, bronze, swing check, factory assembled or field modified to hang closed.
8. Extension: ASTM A74, Service class; full-size, cast-iron soil-pipe extension to field-installed cleanout at floor; replaces backwater valve cover.

B. Cast-Iron, Drain-Outlet Backwater Valves:

1. Manufacturers: Subject to compliance with requirements, provide products by one of the following:

   a. Jay R. Smith Mfg. Co.
   b. Josam Company.
   c. Zurn Industries, LLC.

2. Standard: ASME A112.14.1.
3. Size: Same as floor drain outlet.
4. Body Material: Cast iron or bronze.
5. Check Valve: Removable ball float.
6. Inlet: Threaded.
7. Outlet: Threaded or spigot.

C. Plastic, Horizontal Backwater Valves:

1. Manufacturers: Subject to compliance with requirements, provide products by one of the following:

   a. Canplas LLC.

b. IPS Corporation.
c. NDS Inc.

2. Standard: ASME A112.14.1.
3. Size: Same as connected piping.
4. Body Material: PVC.
5. Cover: Same material as body with threaded access to check valve.
6. Check Valve: Removable swing check.
7. End Connections: Socket type.

PART 3 - EXECUTION

3.1 INSTALLATION

A. Install roof drains at low points of roof areas according to roof membrane manufacturer's written installation instructions.

1. Install flashing collar or flange of roof drain to prevent leakage between drain and adjoining roofing. Maintain integrity of waterproof membranes where penetrated.
2. Install expansion joints, if indicated, in roof drain outlets.
3. Position roof drains for easy access and maintenance.

B. Install downspout adapters on outlet of back-outlet parapet roof drains and connect to sheet metal downspouts.

C. Install downspout boots at grade with top 12 inches above grade. Secure to building wall.

D. Install conductor nozzles at exposed bottom of conductors where they spill onto grade.

E. Install cleanouts in building drain piping according to the following instructions unless otherwise indicated:

1. Use cleanouts the same size as drainage piping up to NPS 4. Use NPS 4 for larger drainage piping unless larger cleanout is indicated.
2. Locate cleanouts at each change in direction of piping greater than 135 degrees.
3. Locate cleanouts at base of each vertical storm piping conductor.

F. For floor cleanouts for piping below floors, install cleanout deck plates with top flush with finished floor.

G. For cleanouts located in concealed piping, install cleanout wall access covers, of types indicated, with frame and cover flush with finished wall.

H. Install horizontal backwater valves in floor with cover flush with floor.

I. Install drain-outlet backwater valves in outlet of drains.

J. Install test tees in vertical conductors and near floor.

K. Install wall cleanouts in vertical conductors. Install access door in wall if indicated.

L. Install through-penetration firestop assemblies for penetrations of fire- and smoke-rated assemblies.

1. Comply with requirements in Section 078413 "Penetration Firestopping."

3.2 CONNECTIONS

A. Comply with requirements for piping specified in Section 221413 "Facility Storm Drainage Piping." Drawings indicate general arrangement of piping, fittings, and specialties.

3.3 FLASHING INSTALLATION

A. Fabricate flashing from single piece of metal unless large pans, sumps, or other drainage shapes are required.

B. Install sheet flashing on pipes, sleeves, and specialties passing through or embedded in floors and roofs with waterproof membrane.

C. Set flashing on floors and roofs in solid coating of bituminous cement.

D. Secure flashing into sleeve and specialty clamping ring or device.

3.4 PROTECTION

A. Protect drains during remainder of construction period to avoid clogging with dirt or debris and to prevent damage from traffic or construction work.

B. Place plugs in ends of uncompleted piping at end of each day or when work stops.

END OF SECTION 221423

SECTION 22 16 19 - DISINFECTION OF POTABLE WATER SYSTEM

PART 1 - GENERAL

1.1 SUMMARY

A. This section includes the furnishing of all labor and materials for disinfection of the potable water system. Potable water systems are those systems which carry domestic water from the supply main without isolation of the branch by a backflow prevention device. Install all plumbing fittings and valves necessary to perform the disinfection.

B. This section also includes the furnishing of all labor and materials to sample water in system following completion of procedure and provide bacteriological analysis of the water.

1.2 QUALIFICATIONS

A. Disinfection: Disinfection shall be done by a commercial disinfection company approved by the Client. Submit to the Client's Representative the name of the proposed company for approval.

B. Bacteriological Analysis: Water testing shall be done by a laboratory approved by the State Department of Health Services. Submit for approval the name of the proposed laboratory as well as the proposed number and location of samples.

C. Provide a certificate of completion per Part B attached standard chlorination report which denotes the lines disinfected, the concentration applied and the amount and type of disinfection agent used, and that disinfection is in accordance with AWWA C-601 and State Health Department requirements.

1.3 ACTION SUBMITTALS

A. Submittals shall be formatted per Section 220000 “General Plumbing Requirements”. The manufacturer shall resubmit the specification section showing compliance with each respective paragraphs and specified items and features in that particular specification section. All **exceptions** shall be clearly identified by referencing respective paragraph and other requirements. Next to each specification item, indicate the following:
   1. “No Exception Taken”.
   2. “Exception”. All exceptions shall be clearly identified by referencing respective paragraph and other requirements along with proposed alternative.

B. Product Data: For each type of product.

PART 2 - PRODUCTS

2.1 MATERIALS

A. Use an approved chlorine agent, applied in liquid form into the system being disinfected. Chlorine gas or a hypochlorite solution may be used to make up the disinfecting liquid.

PART 3 - EXECUTION

3.1 PRELIMINARY PREPARATION OF THE SYSTEM

A. Provide within 3 feet of the supply main, an injection port for introducing the chlorine solution and a gate valve upstream from the injection port.

B. There shall be no dead-end sections in the system exceeding 18 inches in length. All branches within the system shall lead to an outlet for bleeding and flushing.

C. After final pressure tests, open each fixture or outlet to maximum flow and run until the discharge water is free from particulates.

3.2 CHLORINATION PROCEDURE

A. Notify the University's Representative at least five working days prior to the start date of chlorination per Part A attached chlorination report.

B. Install all fixtures to be served by the potable water system before start of chlorination.

C. Prior to injection, place signs on each fixture being treated, reading "Heavily Chlorinated Water - Do Not Use."

D. Introduce the chlorine into the supply stream at a rate to provide a uniform concentration of chlorine in the entire system. Maintain at least 50 ppm chlorine level at each fixture after a hold period of 24 hours.

E. Draw the injected chlorine in the system through each outlet and fixture until the specified concentration level is reached. Then close all valves including the service cock and supply valve. Keep the system closed during the 24 hour hold period.

F. The Client will require a test for the residual concentration in the system at the end of 24 hours. Release no water from the system until these required samples are taken. A minimum concentration of 50 ppm of chlorine is required at all chosen sampling points.

G. After approval to proceed, flush the system at a relatively high velocity to remove the injected chlorine to a concentration in the system of no more than 0.5 ppm above that in the normal supply.

H. After approval to proceed, secure the entire system for at least three days prior to taking samples for bacteriological analysis.

3.3 SAMPLING AND NOTIFICATION

A. At the completion of the three-day hold period, take bacteriological water samples with observation by the Client's Representative.

B. Sample bottles must be provided by the approved laboratory. After the samples have been collected, the Client's Representative may allow temporary use of the water system pending results of the bacteriological analysis of the samples. The system cannot be used unless such allowance in writing is given.

C. Upon completion of sampling, submit the certificate of completion to the Client's Representative for approval.

3.4 ANALYSIS

A. Perform qualitative and quantitative bacterial analysis on the water samples and submit a laboratory report. The report must include the presence of any E. Coli bacteria in a 100 ml sample (this must be negative to be acceptable) and a total plate count of bacteria per cc of the sample (this must be less than 100, or equal to the supply).

3.5 FINAL ACCEPTANCE

A. Upon satisfactory completion of all procedures and receipt of acceptable bacteriological results, written approval of the system will be provided by the Client's Representative per Part C attached standard chlorination report. Failure to fully comply with the above procedures will result in a requirement to repeat the procedure until acceptable results are achieved, at no additional cost to the Client.

END OF SECTION 221619

SECTION 223300 - ELECTRIC, DOMESTIC-WATER HEATERS

PART 1 - GENERAL

1.1 RELATED DOCUMENTS

A. Drawings and general provisions of the Contract, including General and Supplementary Conditions and Division 01 Specification Sections, apply to this Section.

1.2 SUMMARY

A. Section Includes:
   1. Commercial, electric, storage, domestic-water heaters.
   2. Commercial, light-duty, storage, electric, domestic-water heaters.
   3. Domestic-water heater accessories.

1.3 ACTION SUBMITTALS

A. Submittals shall be formatted per Section 220000 “General Plumbing Requirements”. The manufacturer shall resubmit the specification section showing compliance with each respective paragraphs and specified items and features in that particular specification section. All **exceptions** shall be clearly identified by referencing respective paragraph and other requirements. Next to each specification item, indicate the following:

   1. “No Exception Taken”.
   2. “Exception”. All exceptions shall be clearly identified by referencing respective paragraph and other requirements along with proposed alternative.

B. Product Data: For each type of product.

   1. Include rated capacities, operating characteristics, electrical characteristics, and furnished specialties and accessories.

C. Sustainable Design Submittals:

   1. Product Data: For energy efficiency.

D. Shop Drawings:

   1. Include diagrams for power, signal, and control wiring.

1.4 INFORMATIONAL SUBMITTALS

A. Coordination Drawings: Equipment room drawing or BIM model, drawn to scale, on which the items described in this Section are shown and coordinated with all building trades.

1.5 Retain "Seismic Qualification Data" Paragraph below if required by seismic criteria applicable to Project. Coordinate with Section 220548 "Vibration and Seismic Controls for Plumbing Piping and Equipment." See ASCE/SEI 7 for certification requirements for equipment and components.

A. Seismic Qualification Data: Certificates, for commercial domestic-water heaters, accessories, and components, from manufacturer.

1. Basis for Certification: Indicate whether withstand certification is based on actual test of assembled components or on calculation.
2. Dimensioned Outline Drawings of Equipment Unit: Identify center of gravity and locate and describe mounting and anchorage provisions.
3. Detailed description of equipment anchorage devices on which the certification is based and their installation requirements.

B. Product Certificates: For each type of commercial and tankless, electric, domestic-water heater.

C. Domestic-Water Heater Labeling: Certified and labeled by testing agency acceptable to authorities having jurisdiction.

D. Source quality-control reports.

E. Field quality-control reports.

F. Sample Warranty: For special warranty.

1.6 CLOSEOUT SUBMITTALS

A. Operation and Maintenance Data: For electric, domestic-water heaters to include emergency, operation, and maintenance manuals.

1.7 COORDINATION

A. Coordinate sizes and locations of concrete bases with actual equipment provided.

1.8 WARRANTY

A. Special Warranty: Manufacturer agrees to repair or replace components of electric, domestic-water heaters that fail in materials or workmanship within specified warranty period.

1. Failures include, but are not limited to, the following:

a. Structural failures including storage tank and supports.
b. Faulty operation of controls.
c. Deterioration of metals, metal finishes, and other materials beyond normal use.

2. Warranty Periods: From date of Substantial Completion.

a. Commercial, Electric, Domestic-Water Booster Heaters:

1) Controls and Other Components: Three years.

b. Commercial, Electric, Storage, Domestic-Water Heaters:

1) Storage Tank: Five years.
2) Controls and Other Components: Five years.

c. Commercial, Light-Duty, Storage, Electric, Domestic-Water Heaters:

1) Storage Tank: Five years.
2) Controls and Other Components: Three years.

d. Electric, Tankless, Domestic-Water Heaters: Five year(s).
e. Expansion Tanks: Five years.

PART 2 - PRODUCTS

2.1 PERFORMANCE REQUIREMENTS

A. Electrical Components, Devices, and Accessories: Listed and labeled as defined in NFPA 70, by an NRTL, and marked for intended location and use.

B. Seismic Performance: Commercial, electric, domestic-water heaters shall withstand the effects of earthquake motions determined in accordance with ASCE/SEI 7.

1. The term "withstand" means "the unit will remain in place without separation of any parts from the device when subjected to the seismic forces specified and the unit will be fully operational after the seismic event."
2. Component Importance Factor: **1.0**.

C. ASHRAE/IES Compliance: Applicable requirements in ASHRAE/IES 90.1.

D. ASME Compliance: Where ASME-code construction is indicated, fabricate and label commercial, domestic-water heater storage tanks to comply with ASME Boiler and Pressure Vessel Code: Section VIII, Division 1.

E. NSF Compliance: Fabricate and label equipment components that will be in contact with potable water to comply with NSF 61 and NSF 372.

2.2 COMMERCIAL, ELECTRIC, DOMESTIC-WATER HEATERS

A. Commercial, Electric, Storage, Domestic-Water Heaters:

1. Manufacturers: Subject to compliance with requirements, provide products by one of the following:

a. A. O. Smith Corporation.
b. Bradford White Corporation.

c. Lochinvar, LLC.

2. Source Limitations: Obtain domestic-water heaters from single source from single manufacturer.

3. Standard: UL 1453.
4. Storage-Tank Construction: ASME-code, steel vertical arrangement.

   a. Tappings: Factory fabricated of materials compatible with tank and piping connections. Attach tappings to tank before testing.

      1) NPS 2 and Smaller: Threaded ends in accordance with ASME B1.20.1.
      2) NPS 2-1/2 and Larger: Flanged ends in accordance with ASME B16.5 for steel and stainless steel flanges, and in accordance with ASME B16.24 for copper and copper-alloy flanges.

   b. Pressure Rating: 150 psig.
   c. Interior Finish: Comply with NSF 61 and NSF 372 barrier materials for potable-water tank linings, including extending lining material into tappings.

5. Factory-Installed, Storage-Tank Appurtenances:

   a. Anode Rod: Replaceable magnesium.
   b. Drain Valve: Corrosion-resistant metal with hose-end connection.
   c. Insulation: Comply with ASHRAE/IES 90.1.
   d. Jacket: Steel with enameled finish or high-impact composite material.
   e. Heating Elements: Electric, screw-in or bolt-on immersion type arranged in multiples of three.
   f. Temperature Control: Adjustable thermostat.
   g. Safety Controls: High-temperature-limit and low-water cutoff devices or systems.
   h. Relief Valves: ASME rated and stamped for combination temperature-and-pressure relief valves. Include one or more relief valves with total relieving capacity at least as great as heat input, and include pressure setting less than working-pressure rating of domestic-water heater. Select one relief valve with sensing element that extends into storage tank.

6. Special Requirements: NSF 5 construction.

B. Commercial, Light-Duty, Storage, Electric, Domestic-Water Heaters:

1. Manufacturers: Subject to compliance with requirements, provide products by one of the following:

   a. A. O. Smith Corporation.
   b. Bradford White Corporation.
   c. Lochinvar, LLC.

2. Source Limitations: Obtain domestic-water heaters from single source from single manufacturer.
3. Standard: UL 174.

4. Storage-Tank Construction: Steel, vertical arrangement.

    a. Tappings: ASME B1.20.1 pipe thread.
    b. Pressure Rating: 150 psig.
    c. Interior Finish: Comply with NSF 61 and NSF 372 barrier materials for potable-water tank linings, including extending lining material into tappings.

5. Factory-Installed, Storage-Tank Appurtenances:

    a. Anode Rod: Replaceable magnesium.
    b. Dip Tube: Required unless cold-water inlet is near bottom of tank.
    c. Drain Valve: Corrosion-resistant metal with hose-end connection.
    d. Insulation: Comply with ASHRAE/IES 90.1.
    e. Jacket: Steel with enameled finish or high-impact composite material.
    f. Heat-Trap Fittings: Inlet type in cold-water inlet and outlet type in hot-water outlet.
    g. Heating Elements: Electric, screw-in immersion type.
    h. Temperature Control: Adjustable thermostat.
    i. Safety Control: High-temperature-limit cutoff device or system.
    j. Relief Valve: ASME rated and stamped for combination temperature-and-pressure relief valves. Include relieving capacity at least as great as heat input, and include pressure setting less than working-pressure rating of domestic-water heater. Select relief valve with sensing element that extends into storage tank.

6. Special Requirements: NSF 5 construction with legs for off-floor installation.

C. Capacity and Characteristics:

1. Capacity: EWH-1 = 50Gal / EWH-2 = 30 Gal .
2. Recovery: EWH-1 = 140 GPH at 80 degreee temperature rise / EWH-2 = 58 GPH at 80 degree temperature rise..
3. Temperature Setting: 140 deg F.
4. Power Demand: EWH-1 = 27kW / EWH-2 = 11 kW.
5. Heating Elements:

    a. Number of Elements: EWH-1 = 6 elements / EWH-2 = 2 elements
    b. Kilowatts Each Element: EWH-1 = 4.5 kW per element / EWH-2 = 5.5kW per element.

6. Electrical Characteristics:

    a. Volts: 208 V.
    b. Phases: Three.
    c. Hertz: 60 Hz.

2.3 DOMESTIC-WATER HEATER ACCESSORIES

A. Domestic-Water Expansion Tanks:

1. Manufacturers: Subject to compliance with requirements, provide products by one of the following:

    a. AMTROL, Inc.
    b. Honeywell.
    c. TACO Comfort Solutions, Inc.

2. Source Limitations: Obtain domestic-water expansion tanks from single source from single manufacturer.

3. Description: Steel pressure-rated tank constructed with welded joints and factory-installed, butyl-rubber diaphragm. Include air precharge to minimum system-operating pressure at tank.
4. Construction:

    a. Tappings: Factory-fabricated steel, welded to tank before testing and labeling. Include ASME B1.20.1 pipe thread.
    b. Interior Finish: Comply with NSF 61 and NSF 372 barrier materials for potable-water tank linings, including extending finish into and through tank fittings and outlets.
    c. Air-Charging Valve: Factory installed.

5. Capacity and Characteristics:

    a. Working-Pressure Rating: 150 psig.
    b. Capacity Acceptable: 2 gal. minimum.

B. Drain Pans: Corrosion-resistant metal with raised edge. Include dimensions not less than base of domestic-water heater, and include drain outlet not less than NPS 3/4 with ASME B1.20.1 pipe threads.

C. Piping-Type Heat Traps: Field-fabricated piping arrangement in accordance with ASHRAE/IES 90.1 ASHRAE 90.2.

D. Heat-Trap Fittings: ASHRAE/IES 90.1 ASHRAE 90.2.

E. Manifold Kits: Domestic-water-heater manufacturer's factory-fabricated inlet and outlet piping for field installation, for multiple domestic-water heater installation. Include ball-, butterfly-, or gate-type shutoff valves to isolate each domestic-water heater and balancing valves to provide balanced flow through each domestic-water heater.

1. Comply with requirements for ball-, butterfly-, or gate-type shutoff valves specified in Section 220523.12 "Ball Valves for Plumbing Piping," Section 220523.13 "Butterfly Valves for Plumbing Piping," and Section 220523.15 "Gate Valves for Plumbing Piping."
2. Comply with requirements for balancing valves specified in Section 221119 "Domestic Water Piping Specialties."

F. Pressure-Reducing Valves: ASSE 1003 for water. Set at 25-psig-maximum outlet pressure unless otherwise indicated.

G. Combination Temperature-and-Pressure Relief Valves: ASME rated and stamped. Include relieving capacity at least as great as heat input, and include pressure setting less than working-pressure rating of domestic-water heater. Select relief valves with sensing element that extends into storage tank.

H. Pressure Relief Valves: ASME rated and stamped. Include pressure setting less than working-pressure rating of domestic-water heater.

I. Vacuum Relief Valves: ANSI Z21.22/CSA 4.4.

J. Shock Absorbers: ASSE 1010 or PDI-WH 201, Size A water hammer arrester.

K. Domestic-Water Heater Stands: Manufacturer's factory-fabricated steel stand for floor mounting, capable of supporting domestic-water heater and water. Include dimension that will support bottom of domestic-water heater a minimum of 18 inches above the floor.

L. Domestic-Water Heater Mounting Brackets: Manufacturer's factory-fabricated steel bracket for wall mounting, capable of supporting domestic-water heater and water.

2.4 SOURCE QUALITY CONTROL

A. Factory Tests: Test and inspect domestic-water heaters specified to be ASME-code construction, in accordance with ASME Boiler and Pressure Vessel Code.

B. Hydrostatically test commercial domestic-water heaters to minimum of one and one-half times pressure rating before shipment.

C. Electric, domestic-water heaters will be considered defective if they do not pass tests and inspections.

D. Prepare test and inspection reports.

PART 3 - EXECUTION

3.1 DOMESTIC-WATER HEATER INSTALLATION

A. Commercial, Electric, Domestic-Water Heater Mounting: Install commercial, electric, domestic-water heaters on concrete base. Comply with requirements for concrete bases specified in Section 033000 "Cast-in-Place Concrete."

1. Exception: Omit concrete bases for commercial, electric, domestic-water heaters if installation on stand, bracket, suspended platform, or directly on floor is indicated.
2. Maintain manufacturer's recommended clearances.
3. Arrange units so controls and devices that require servicing are accessible.
4. Install dowel rods to connect concrete base to concrete floor. Unless otherwise indicated, install dowel rods on 18-inch centers around the full perimeter of concrete base.

5. For supported equipment, install epoxy-coated anchor bolts that extend through concrete base and anchor into structural concrete floor.
6. Place and secure anchorage devices. Use setting drawings, templates, diagrams, instructions, and directions furnished with items to be embedded.
7. Install anchor bolts to elevations required for proper attachment to supported equipment.
8. Anchor domestic-water heaters to substrate.
9. Maintain manufacturer's recommended clearances.
10. Arrange units so controls and devices that require servicing are accessible.
11. Place and secure anchorage devices. Use setting drawings, templates, diagrams, instructions, and directions furnished with items to be embedded.
12. Install anchor bolts to elevations required for proper attachment to supported equipment.
13. Anchor domestic-water heaters to substrate.

B. Install electric, domestic-water heaters level and plumb, in accordance with layout drawings, original design, and referenced standards. Maintain manufacturer's recommended clearances. Arrange units so controls and devices needing service are accessible.

1. Install shutoff valves on domestic-water-supply piping to domestic-water heaters and on domestic-hot-water outlet piping. Comply with requirements for shutoff valves specified in Section 220523.12 "Ball Valves for Plumbing Piping," Section 220523.13 "Butterfly Valves for Plumbing Piping," and Section 220523.15 "Gate Valves for Plumbing Piping."

C. Install commercial, electric, domestic-water heaters with seismic-restraint devices. Comply with requirements for seismic-restraint devices specified in Section 220548 "Vibration and Seismic Controls for Plumbing Piping and Equipment."

D. Install combination temperature-and-pressure relief valves in top portion of storage tanks. Use relief valves with sensing elements that extend into tanks. Extend domestic-water heater relief-valve outlet, with drain piping same as domestic-water piping in continuous downward pitch, and discharge by positive air gap onto closest floor sink.

E. Install combination temperature-and-pressure relief valves in water piping for electric, domestic-water heaters without storage. Extend domestic-water heater relief-valve outlet, with drain piping same as domestic-water piping in continuous downward pitch, and discharge by positive air gap onto closest floor drain.

F. Install water-heater drain piping as indirect waste to spill by positive air gap into open drains or over floor drains. Install hose-end drain valves at low points in water piping for electric, domestic-water heaters that do not have tank drains. Comply with requirements for hose-end drain valves specified in Section 221119 "Domestic Water Piping Specialties."

G. Install thermometers on outlet piping of electric, domestic-water heaters. Comply with requirements for thermometers specified in Section 220519 "Meters and Gages for Plumbing Piping."

H. Install thermometers on outlet piping of solar, electric, domestic-water heaters. Comply with requirements for thermometers specified in Section 220519 "Meters and Gages for Plumbing Piping."

I. Assemble and install inlet and outlet piping manifold kits for multiple electric, domestic-water heaters. Fabricate, modify, or arrange manifolds for balanced water flow through each electric, domestic-water heater. Include shutoff valve and thermometer in each domestic-water heater inlet and outlet, and throttling valve in each electric, domestic-water heater outlet. Comply with requirements for valves specified in Section 220523.12 "Ball Valves for Plumbing Piping," Section 220523.13 "Butterfly Valves for Plumbing Piping," and Section 220523.15 "Gate Valves for Plumbing Piping," and comply with requirements for thermometers specified in Section 220519 "Meters and Gages for Plumbing Piping."

J. Install pressure-reducing valve with integral bypass relief valve in electric, domestic-water booster-heater inlet piping and water hammer arrester in booster-heater outlet piping. Set pressure-reducing valve for outlet pressure of 25 psig. Comply with requirements for pressure-reducing valves and water hammer arresters specified in Section 221119 "Domestic Water Piping Specialties."

K. Install piping-type heat traps on inlet and outlet piping of electric, domestic-water heater storage tanks without integral or fitting-type heat traps.

L. Fill electric, domestic-water heaters with water.

M. Charge domestic-water expansion tanks with air to required system pressure.

N. Install dielectric fittings in all locations where piping of dissimilar metals is to be joined. The wetted surface of the dielectric fitting contacted by potable water shall contain less than 0.25 percent of lead by weight.

3.2 PIPING CONNECTIONS

A. Comply with requirements for piping specified in Section 221116 "Domestic Water Piping." Drawings indicate general arrangement of piping, fittings, and specialties.

B. Where installing piping adjacent to electric, domestic-water heaters, allow space for service and maintenance of water heaters. Arrange piping for easy removal of domestic-water heaters.

3.3 IDENTIFICATION

A. Identify system components. Comply with requirements for identification specified in Section 220553 "Identification for Plumbing Piping and Equipment."

3.4 FIELD QUALITY CONTROL

A. Testing Agency: Owner will engage a qualified testing agency to perform tests and inspections.

B. Testing Agency: Engage a qualified testing agency to perform tests and inspections.

C. Manufacturer's Field Service: Engage a factory-authorized service representative to test and inspect components, assemblies, and equipment installations, including connections.

D. Perform tests and inspections with the assistance of a factory-authorized service representative.

E. Tests and Inspections:

1. Leak Test: After installation, charge system and test for leaks. Repair leaks and retest until no leaks exist.
2. Operational Test: After electrical circuitry has been energized, start units to confirm proper operation.
3. Test and adjust controls and safeties. Replace damaged and malfunctioning controls and equipment.

F. Electric, domestic-water heaters will be considered defective if they do not pass tests and inspections.

G. Prepare test and inspection reports.

3.5 DEMONSTRATION

A. Engage a factory-authorized service representative to train Owner's maintenance personnel to adjust, operate, and maintain commercial and tankless, electric, domestic-water heaters. Training shall be a minimum of one hour(s).

END OF SECTION 223300

SECTION 224000 - PLUMBING FIXTURES

PART 1 - GENERAL

1.1 RELATED DOCUMENTS

A. Drawings and general provisions of the Contract, including General and Supplementary Conditions and Division 01 Specification Sections, apply to this Section.

1.2 SUMMARY

A. Section Includes:

1. Water closets.
2. Water closet Flushometer valves and tanks.
3. Toilet seats.
4. Urinals.
5. Urinal Flushometer valves.
6. Lavatories.
7. Lavatory Faucets.
8. Service sinks.
9. Utility sinks.
10. Handwash sinks.
11. Sink faucets.
12. Laminar-flow, faucet-spout outlets.
13. Lavatory and Sink Supply Fittings.
14. Lavatory and Sink Waste Fittings.
15. Lavatories.
16. Grout.
17. Supports. Service basins.
18. Utility sinks.
19. Handwash sinks.
20. Shower faucets.

B. Related Requirements:
1. Section 224713 "Drinking Fountains" for drinking fountain units.

1.3 DEFINITIONS

A. Effective Flush Volume: Average of two reduced flushes and one full flush per fixture.

B. Remote Water Closet: Located more than 30 feet from other drain line connections or fixture and where less than 1.5 drainage fixture units are upstream of the drain line connection.

1.4 ACTION SUBMITTALS

A. Submittals shall be formatted per Section 220000 "General Plumbing Requirements". The manufacturer shall resubmit the specification section showing compliance with each respective paragraphs and specified items and features in that particular specification section. All **exceptions** shall be clearly identified by referencing respective paragraph and other requirements. Next to each specification item, indicate the following:

1. "No Exception Taken".
2. "Exception". All exceptions shall be clearly identified by referencing respective paragraph and other requirements along with proposed alternative.

B. Product Data: For each type of product.

1. Include construction details, material descriptions, dimensions of individual components and profiles, and finishes for water closets.
2. Include rated capacities, operating characteristics, electrical characteristics, and furnished specialties and accessories.

C. Shop Drawings: Include diagrams for power, signal, and control wiring.

1.5 CLOSEOUT SUBMITTALS

A. Operation and Maintenance Data: For flushometer valves and electronic sensors to include in operation and maintenance manuals.

1.6 MAINTENANCE MATERIAL SUBMITTALS

A. Furnish extra materials that are packaged with protective covering for storage and identified with labels describing contents.

1. Water Closet Flushometer-Valve Repair Kits: Equal to 10 percent of amount of each type installed, but no fewer than six of each type.
2. Urinal Flushometer-Valve Repair Kits: Equal to 10 percent of amount of each type installed, but no fewer than six of each type.
3. Waterless Urinal Trap-Seal Cartridges: Equal to 200 percent of amount of each type installed, but no fewer than 12 of each type.
4. Waterless Urinal Trap-Seal Liquid: Equal to 1 gal. for each urinal installed.

PART 2 - PRODUCTS

2.1 WALL-MOUNTED WATER CLOSETS

A. Water Closets: Wall mounted, top spud, accessible.

1. Manufacturers: Subject to compliance with requirements, provide products by one of the following:

   a. American Standard.
   b. Kohler Co.
   c. Zurn Industries, LLC.

2. Bowl:

   a. Standards: ASME A112.19.2/CSA B45.1 and ASME A112.19.5.
   b. Material: Vitreous china.
   c. Type: Siphon jet.
   d. Style: Flushometer valve.
   e. Height: Standard.
   f. Rim Contour: Elongated.
   g. Water Consumption: 1.28 gal. per flush.
   h. Spud Size and Location: NPS 1-1/2; top.

3. Flushometer Valve: See “Water Closet Flushometer Valve” section.
4. Toilet Seat: See “Toilet Seat” Section.
5. Support: Water closet carrier See “Water Closet Carrier” Section.
6. Water-Closet Mounting Height: Standard] Handicapped/elderly according to ICC/ANSI A117.1.

2.2 WATER FLUSHOMETER VALVES

A. Solenoid-Actuator, Diaphragm Flushometer Valves:

1. Manufacturers: Subject to compliance with requirements, provide products by one of the following:
   a. Gerber Plumbing Fixtures LLC.
   b. Sloan Valve Company.
   c. Zurn Industries, LLC.

2. Standard: ASSE 1037.
3. Minimum Pressure Rating: 125 psig.
4. Features: Include integral check stop and backflow-prevention device.
5. Material: Brass body with corrosion-resistant components.
6. Exposed Flushometer-Valve Finish: Chrome plated.
7. Panel Finish: Chrome plated or stainless steel.
8. Style: Exposed.
9. Actuator: Solenoid complying with UL 1951, and listed and labeled as defined in NFPA 70, by a qualified testing agency, and marked for intended location and application.
10. Trip Mechanism: Hard-wired electronic sensor complying with UL 1951, and listed and labeled as defined in NFPA 70, by a qualified testing agency, and marked for intended location and application.
11. Consumption: 1.28 gal. Insert value per flush.
12. Minimum Inlet: NPS 1.
13. Minimum Outlet: NPS 1-1/4.

2.3 TOILET SEATS

A. Toilet Seats:

1. Manufacturers: Subject to compliance with requirements, provide products by one of the following:

   a. Bemis Manufacturing Company.
   b. Kohler Co.
   c. Olsonite Seat Co.

2. Standard: IAPMO/ANSI Z124.5.
3. Material: Plastic.
4. Type: Commercial (Heavy duty).
5. Shape: Elongated rim, open front.
6. Hinge: Self-sustaining, check.
7. Hinge Material: Noncorroding metal.
8. Seat Cover: Not required.
9. Color: White.

2.4 SUPPORTS

A. Water Closet Carrier:

1. Manufacturers: Subject to compliance with requirements, provide products by the following:

   a. Zurn Industries, LLC.

   b. JR Smith

2. Standard: ASME A112.6.1M.
3. Description: Waste-fitting assembly, as required to match drainage piping material and arrangement with faceplates, couplings gaskets, and feet; bolts and hardware matching fixture. Include additional extension coupling, faceplate, and feet for installation in wide pipe space.

2.5 WALL-HUNG URINALS

A. Urinals: Wall hung, back outlet, washout, accessible.

1. Manufactures:

   a. Kohler Co.
   b. Zurn Industries, LLC.
   c. American Standard

2. Fixture:

    a. Standards: ASME A112.19.2/CSA B45.1 and ASME A112.19.5.
    b. Material: Vitreous china.
    c. Type: Washout with extended shields.
    d. Strainer or Trapway: Manufacturer's standard strainer with integral trap.
    e. Water Consumption: Low.
    f. Spud Size and Location: NPS 3/4, top.
    g. Outlet Size and Location: NPS 2, back.
    h. Color: White.

3. Flushometer Valve: See “Urinal Flushometer Valve” section.
4. Waste Fitting:

    a. Standard: ASME A112.18.2/CSA B125.2 for coupling.
    b. Size: NPS 2.

5. Support: Type I Urinal Carrier with fixture support plates and coupling with seal and fixture bolts and hardware matching fixture. Include rectangular, steel uprights..
6. Urinal Mounting Height: Standard and Handicapped/elderly according to ICC A117.1.

2.6 URINAL FLUSHOMETER VALVES

A. Solenoid-Actuator, Diaphragm Flushometer Valves:

1. Manufactures:

    a. Sloan Valve Company
    b. Zurn Industries, LLC.
    c. American Standard
2. Standard: ASSE 1037.
3. Minimum Pressure Rating: 125 psig.
4. Features: Include integral check stop and backflow-prevention device.
5. Material: Brass body with corrosion-resistant components.
6. Exposed Flushometer-Valve Finish: Chrome plated.
7. Panel Finish: Chrome plated or stainless steel.
8. Style: Exposed.
9. Actuator: Solenoid complying with UL 1951; listed and labeled as defined in NFPA 70, by a qualified testing agency; and marked for intended location and application.
10. Trip Mechanism: Hard-wired electronic sensor complying with UL 1951; listed and labeled as defined in NFPA 70, by a qualified testing agency; and marked for intended location and application.
11. Consumption: 0..125 gal. per flush.
12. Minimum Inlet: NPS 3/4.
13. Minimum Outlet: NPS 1-1/4.

2.7 SUPPORTS

A. Type I Urinal Carrier:
   1. Standard: ASME A112.6.1M.

B. Type I Sink Carrier:

   1. <Double click here to find, evaluate, and insert list of manufacturers and products.>
   2. Standard: ASME A112.6.1M.

2.8 VITREOUS-CHINA, COUNTER-MOUNTED LAVATORIES

A. Lavatory L-1: Oval, self-rimming, vitreous china, counter mounted.

   1. Manufacturers: Subject to compliance with requirements, provide products by one of the following:

      a. American Standard.
      b. Kohler Co.
      c. Zurn Industries, LLC.

   2. Fixture:

      a. Standard: ASME A112.19.2/CSA B45.1.
      b. Type: Self-rimming for above-counter mounting.
      c. Nominal Size: Oval, 20 by 17 inches.
      d. Faucet-Hole Punching: Three holes, 4-inch centers.
      e. Faucet-Hole Location: Top.
      f. Color: White.
      g. Mounting Material: Sealant.

2.9 VITREOUS-CHINA, WALL-MOUNTED LAVATORIES

A. Lavatory: Ledge back, vitreous china, wall mounted.

   1. Manufacturers: Subject to compliance with requirements, provide products by one of the following:

      a. American Standard.
      b. Kohler Co.
      c. Sloan Valve Company.

   2. Fixture:

      a. Standard: ASME A112.19.2/CSA B45.1.
      b. Type: For wall hanging.
      c. Nominal Size: rectangular, 21” x 18”.
      d. Faucet-Hole Punching: Three holes, 4-inch centers.
      e. Faucet-Hole Location: Top.
      f. Color: White.

g. Mounting Material: Chair carrier.
3. Support: Type II, concealed-arm lavatory carrier. Include rectangular, steel uprights..
4. Lavatory Mounting Height: Handicapped/elderly according to ICC A117.1.

2.10 SOLID-BRASS, MANUALLY OPERATED FAUCETS

A. NSF Standard: Comply with NSF 372 for faucet materials that will be in contact with potable water.

B. Lavatory Faucets: Manual-type, single-control mixing,, solid-brass valve.

1. Manufacturers: Subject to compliance with requirements, provide products by one of the following:
   a. Chicago Faucets; Geberit Company.
   b. Just Manufacturing.
   c. T&S Brass and Bronze Works, Inc.

2. Standard: ASME A112.18.1/CSA B125.1.
3. General: Include hot- and cold-water indicators; coordinate faucet inlets with supplies and fixture hole punchings; coordinate outlet with spout and fixture receptor.
4. Body Type: Centerset Single hole.
5. Body Material: Commercial, solid brass.
6. Finish: Polished chrome plate.
7. Maximum Flow Rate: 0.5 gpm.
8. Mounting Type: Deck, exposed.
9. Valve Handle(s): Single lever.
10. Spout: Rigid type.
11. Operation: Compression, manual.

2.11 SUPPLY FITTINGS

A. NSF Standard: Comply with NSF 372 for supply-fitting materials that will be in contact with potable water.

B. Standard: ASME A112.18.1/CSA B125.1.

C. Supply Piping: Chrome-plated-brass pipe or chrome-plated copper tube matching water-supply piping size. Include chrome-plated-brass or stainless-steel wall flange.

D. Supply Stops: Chrome-plated-brass, one-quarter-turn, ball-type or compression valve with inlet connection matching supply piping.

E. Operation: Loose key.

F. Risers:

1. NPS 1/2.

2. Chrome-plated, rigid-copper-pipe and brass straight or offset tailpieces or Chrome-plated, soft-copper flexible tube or ASME A112.18.6, braided- or corrugated-stainless-steel, flexible hose riser.

2.12 WASTE FITTINGS

A. Standard: ASME A112.18.2/CSA B125.2.

B. Drain: Grid type with NPS 1-1/4 offset and straight tailpiece.

C. Trap:

1. Size: NPS 1-1/2 by NPS 1-1/4.
2. Material: Chrome-plated, two-piece, cast-brass trap and swivel elbow with 0.032-inch-thick brass tube to wall; and chrome-plated, brass or steel wall flange.
3. Material: Stainless-steel, two-piece trap and swivel elbow with 0.012-inch-thick stainless-steel tube to wall; and stainless-steel wall flange.

2.13 SUPPORTS

A. Type II Lavatory Carrier:

1. Standard: ASME A112.6.1M.

2.14 SERVICE SINKS

A. Service Sinks: Enameled, cast iron, floor mounted.

1. Manufacturers: Subject to compliance with requirements, provide products by the following:

a. Zurn Industries, LLC.

b. American Standard

2. Fixture:

a. Standard: ASME A112.19.1/CSA B45.2.
b. Style: With front apron and raised back.
c. Nominal Size: 28 by 28 inches.
d. Color: White.
e. Drain: Grid with NPS 3 outlet.
f. Rim Guard: Coated wire.

2.15 HANDWASH SINKS

A. Handwash Sinks: Stainless steel, wall mounted.

1. Manufacturers: Subject to compliance with requirements, provide products by one of the following:

    a. Advance Tabco.
    b. Just Manufacturing.
    c. Sloan Valve Company.

2. Fixture:

    a. Standards: ASME A112.19.3/CSA B45.4 and NSF/ANSI 2.
    b. Type: Basin with radius corners, back for faucet, and support brackets.
    c. Nominal Size: 17 by 16 by 5 inches.
3. Supply Fittings: Comply with requirements in "Supply Fittings" Article.
4. Waste Fittings: Comply with requirements in "Waste Fittings" Article.
5. Support: Type II sink carrier..

2.16 SINK FAUCETS

A. NSF Standard: Comply with NSF 372 for faucet-spout materials that will be in contact with potable water.

B. Sink Faucets: Manual type, single control or two lever handle mixing valve.

1. Commercial, Solid-Brass Faucets:

    a. Manufacturers: Subject to compliance with requirements, provide products by one of the following:
        1) Chicago Faucets; Geberit Company.
        2) Sloan Valve Company.
        3) T&S Brass and Bronze Works, Inc.

2. General-Duty, Solid-Brass Faucets:

    a. Manufacturers: Subject to compliance with requirements, provide products by one of the following:
        1) Chicago Faucets; Geberit Company.
        2) Kohler Co.
        3) T&S Brass and Bronze Works, Inc.

2.17 SUPPORTS

A. Type II Sink Carrier:

1. Manufacturers: Subject to compliance with requirements, provide products by one of the following:

    a. Jay R. Smith Mfg. Co.
    b. Josam Company.

c. MIFAB, Inc.
d. .

2. Standard: ASME A112.6.1M.

2.18 SUPPLY FITTINGS

A. NSF Standard: Comply with NSF 372 for supply-fitting materials that will be in contact with potable water.

B. Standard: ASME A112.18.1/CSA B125.1.

C. Supply Piping: Chrome-plated brass pipe or chrome-plated copper tube matching water-supply piping size. Include chrome-plated brass or stainless-steel wall flange.

D. Supply Stops: Chrome-plated brass, one-quarter-turn, ball-type or compression valve with inlet connection matching supply piping.

E. Operation: Loose key.

F. Risers:

1. NPS 1/2.
2. Chrome-plated, rigid-copper pipe or Chrome-plated, soft-copper flexible tube or ASME A112.18.6, braided or corrugated stainless-steel flexible hose.

2.19 WASTE FITTINGS

A. Standard: ASME A112.18.2/CSA B125.2.

B. Drain: Grid type with NPS 1-1/2 offset and straight tailpiece.

C. Trap:

1. Size: NPS 1-1/2.
2. Material: Chrome-plated, two-piece, cast-brass trap and ground-joint swivel elbow with 0.032-inch-thick brass tube to wall; and chrome-plated brass or steel wall flange.
3. Material: Stainless-steel, two-piece trap and swivel elbow with 0.012-inch-thick stainless-steel tube to wall; and stainless-steel wall flange.

2.20 GROUT

A. Standard: ASTM C1107/C1107M, Grade B, post-hardening and volume-adjusting, dry, hydraulic-cement grout.

B. Characteristics: Nonshrink; recommended for interior and exterior applications.

C. Design Mix: 5000-psi, 28-day compressive strength.

D. Packaging: Premixed and factory packaged.

2.21 SHOWER FAUCETS

A. NSF Standard: Comply with NSF 61 Annex G, "Drinking Water System Components - Health Effects," for shower materials that will be in contact with potable water.

B. Shower Faucets:

1. Manufacturers: Subject to compliance with requirements, provide products by one of the following:

   a. Acorn Engineering Company.
   b. Chicago Faucets; Geberit Company.
   c. Leonard Valve Company.

2. Description: Single-handle, pressure-balance mixing valve with hot- and cold-water indicators; check stops; and shower head.
3. Faucet:

   a. Standards: ASME A112.18.1/CSA B125.1 and ASSE 1016.
   b. Body Material: Solid brass.
   c. Finish: Polished chrome plate.
   d. Shower-Arm, Flow-Control Fitting: 1.5 gpm.
   e. EPA WaterSense: Required.
   f. Mounting: Exposed.
   g. Operation: Single-handle, twist or rotate control.
   h. Antiscald Device: Integral with mixing valve.
   i. Check Stops: Check-valve type, integral with or attached to body; on hot- and cold-water supply connections.

4. Supply Connections: NPS 1/2.
5. Shower Head:

   a. Standard: ASME A112.18.1/CSA B125.1.
   b. Type: Integral with mounting flange.
   c. Shower Head Material: Metallic with chrome-plated finish.
   d. Spray Pattern: Fixed.
   e. Integral Volume Control: Required.
   f. Shower-Arm, Flow-Control Fitting: 1.5 gpm.
   g. Temperature Indicator: Not required.

PART 3 - EXECUTION

3.1 EXAMINATION

A. Examine roughing-in of water supply and sanitary drainage and vent piping systems to verify actual locations of piping connections before water-closet installation.

B. Examine walls and floors for suitable conditions where water closets will be installed.

C. Proceed with installation only after unsatisfactory conditions have been corrected.

3.2 INSTALLATION

A. Water-Closet Installation:

1. Install level and plumb according to roughing-in drawings.
2. Install accessible, wall-mounted water closets at mounting height for handicapped/elderly, according to ICC/ANSI A117.1.

B. Support Installation:

1. Install supports, affixed to building substrate, for floor-mounted, back-outlet water closets.
2. Use carrier supports with waste-fitting assembly and seal.
3. Install wall-mounted, back-outlet water-closet supports with waste-fitting assembly and waste-fitting seals; and affix to building substrate.

C. Flushometer-Valve Installation:

1. Install flushometer-valve, water-supply fitting on each supply to each water closet.
2. Attach supply piping to supports or substrate within pipe spaces behind fixtures.
3. Install lever-handle flushometer valves for accessible water closets with handle mounted on open side of water closet.
4. Install actuators in locations that are easy for people with disabilities to reach.

D. Install toilet seats on water closets.

E. Wall Flange and Escutcheon Installation:

1. Install wall flanges or escutcheons at piping wall penetrations in exposed, finished locations and within cabinets and millwork.
2. Install deep-pattern escutcheons if required to conceal protruding fittings.
3. Comply with escutcheon requirements specified in Section 220518 "Escutcheons for Plumbing Piping."

F. Joint Sealing:

1. Seal joints between water closets and walls and floors using sanitary-type, one-part, mildew-resistant silicone sealant.
2. Match sealant color to water-closet color.
3. Comply with sealant requirements specified in Section 079200 "Joint Sealants."

3.3 CONNECTIONS

A. Connect water closets with water supplies and soil, waste, and vent piping. Use size fittings required to match water closets.

B. Comply with water piping requirements specified in Section 221116 "Domestic Water Piping."

C. Comply with soil and waste piping requirements specified in Section 221316 "Sanitary Waste and Vent Piping."

D. Where installing piping adjacent to water closets, allow space for service and maintenance.

3.4 ADJUSTING

A. Operate and adjust water closets and controls. Replace damaged and malfunctioning water closets, fittings, and controls.

B. Adjust water pressure at flushometer valves to produce proper flow.

C. Install fresh batteries in battery-powered, electronic-sensor mechanisms.

3.5 CLEANING AND PROTECTION

A. Clean water closets and fittings with manufacturers' recommended cleaning methods and materials.

B. Install protective covering for installed water closets and fittings.

C. Do not allow use of water closets for temporary facilities unless approved in writing by Owner.

D. Fixtures shall be protected during construction from any damages. Refinished fixtures will not be acceptable under any conditions.

END OF SECTION 224000

SECTION 224713 - DRINKING FOUNTAINS

PART 1 - GENERAL

1.1 RELATED DOCUMENTS

A. Drawings and general provisions of the Contract, including General and Supplementary Conditions and Division 01 Specification Sections, apply to this Section.

1.2 SUMMARY

A. Section includes drinking fountains and related components.

1.3 ACTION SUBMITTALS

A. Submittals shall be formatted per Section 220000 "General Plumbing Requirements". The manufacturer shall resubmit the specification section showing compliance with each respective paragraphs and specified items and features in that particular specification section. All **exceptions** shall be clearly identified by referencing respective paragraph and other requirements. Next to each specification item, indicate the following:

1. "No Exception Taken".
2. "Exception". All exceptions shall be clearly identified by referencing respective paragraph and other requirements along with proposed alternative.

B. Product Data: For each type of drinking fountain.

1. Include construction details, material descriptions, dimensions of individual components and profiles, and finishes.
2. Include operating characteristics, and furnished specialties and accessories.

C. Sustainable Design Submittals:

1. Product Data: For water consumption.

1.4 CLOSEOUT SUBMITTALS

A. Maintenance Data: For drinking fountains to include in maintenance manuals.

PART 2 - PRODUCTS

2.1 DRINKING FOUNTAINS

A. Drinking Fountains DF-1: Stainless steel, wall mounted.

1. Stainless-Steel Drinking Fountains:

a. Manufacturers: Subject to compliance with requirements, provide products by one of the following:

1) Elkay Manufacturing Co.
2) Filtrine Manufacturing Company.
3) Halsey Taylor.
4) Haws Corporation.
5) Oasis International.

2. Vitreous-China Drinking Fountains:

a. Manufacturers: Subject to compliance with requirements, provide products by the following:

1) Kohler Co.

3. Standards: Comply with ASME A112.19.3/CSA B45.4.
4. Standards: Comply with NSF 61 Annex G.
5. Receptor Shape: Concave with projecting bowl.
6. Bubbler: One, with adjustable stream regulator, located on deck.
7. Maximum water flow: 0.5 gpm.
8. Control: Push bar.
9. Drain: Grid type with NPS 1-1/4 tailpiece.
10. Supply: NPS 3/8 with shutoff valve.
11. Waste Fitting: ASME A112.18.2/CSA B125.2, NPS 1-1/4 brass P-trap.
12. Support: Mounting frame or brackets for attaching to wood blocking or substrate.

2.2 SUPPORTS

A. Type I Water Cooler Carrier:

1. Manufacturers: Subject to compliance with requirements, provide products by one of the following:

a. Jay R. Smith Mfg. Co.
b. Josam Company.
c. MIFAB, Inc.
d. WATTS.
e. Zurn Industries, LLC.

2. Standard: ASME A112.6.1M.

B. Type II Water Cooler Carrier:

1. Manufacturers: Subject to compliance with requirements, provide products by one of the following:

a. Jay R. Smith Mfg. Co.
b. Josam Company.
c. MIFAB, Inc.
d. WATTS.
e. Zurn Industries, LLC.

2. Standard: ASME A112.6.1M.

PART 3 - EXECUTION

3.1 EXAMINATION

A. Examine roughing-in for water-supply and sanitary drainage and vent piping systems to verify actual locations of piping connections before fixture installation.

B. Examine walls and floors for suitable conditions where fixtures will be installed.

C. Proceed with installation only after unsatisfactory conditions have been corrected.

3.2 INSTALLATION

A. Install fixtures level and plumb according to roughing-in drawings. For fixtures indicated for children, install at height required by authorities having jurisdiction.

B. Install off-the-floor carrier supports, affixed to building substrate, for wall-mounted fixtures.

C. Install water-supply piping with shutoff valve on supply to each fixture to be connected to domestic-water distribution piping. Use ball or gate valve. Install valves in locations where they can be easily reached for operation. Valves are specified in Section 220523.12 "Ball Valves for Plumbing Piping" and Section 220523.15 "Gate Valves for Plumbing Piping."

D. Install trap and waste piping on drain outlet of each fixture to be connected to sanitary drainage system.

E. Install wall flanges or escutcheons at piping wall penetrations in exposed, finished locations. Use deep-pattern escutcheons where required to conceal protruding fittings. Comply with escutcheon requirements specified in Section 220518 "Escutcheons for Plumbing Piping."

F. Seal joints between fixtures and walls using sanitary-type, one-part, mildew-resistant, silicone sealant. Match sealant color to fixture color. Comply with sealant requirements specified in Section 079200 "Joint Sealants."

3.3 CONNECTIONS

A. Connect fixtures with water supplies, stops, and risers, and with traps, soil, waste, and vent piping. Use size fittings required to match fixtures.

B. Comply with water piping requirements specified in Section 221116 "Domestic Water Piping."

C. Install ball or gate shutoff valve on water supply to each fixture. Comply with valve requirements specified in Section 220523.12 "Ball Valves for Plumbing Piping" and Section 220523.15 "Gate Valves for Plumbing Piping."

D. Comply with soil and waste piping requirements specified in Section 221316 "Sanitary Waste and Vent Piping."

3.4 ADJUSTING

A. Adjust fixture flow regulators for proper flow and stream height.

3.5 CLEANING

A. After installing fixtures, inspect unit. Remove paint splatters and other spots, dirt, and debris. Repair damaged finish to match original finish.

B. Clean fixtures, on completion of installation, according to manufacturer's written instructions.

C. Provide protective covering for installed fixtures.

D. Do not allow use of fixtures for temporary facilities unless approved in writing by Owner.

END OF SECTION 224713

SECTION 230000 – GENERAL MECHANICAL REQUIREMENTS

PART 1 - GENERAL

1.1 RELATED DOCUMENTS

A. Drawings and general provisions of the Contract, including General and Supplementary Conditions and Division 01 Specification Sections, apply to this Section.

1.2 SCOPE

A. Basic mechanical requirements specifically applicable to Division 23 and 33 Sections.

B. Work includes but is not necessarily limited to the following:
   1. Labor, materials, services, equipment, and appliances required for completion of tasks as indicated on drawing or in specification or as inherently necessary to prepare spaces and systems for new installations as follows:
      a. Heating, ventilating and air conditioning systems and equipment
      b. Testing, adjusting and balancing

1.3 DRAWINGS AND SPECIFICATIONS

A. Drawings accompanying these Specifications show intent of Work to be done. Specifications shall identify quality and grade of installation and where equipment and hardware is not particularly specified, Contractor shall provide submittals for all products and install them per manufacturers' recommendations, and in a workmanlike manner.

B. Examine Drawings and Specifications for elements in connection with this Work; determine existing and new general construction conditions and be familiar with all limitations caused by such conditions.

C. Plans are intended to show general arrangement and extent of Work contemplated. Exact location and arrangement of parts shall be determined after the Owner has reviewed equipment, as Work progresses, to conform in best possible manner with surroundings, and as directed by the Owner's Representative.

D. Contract Documents are in part diagrammatic and intended to show the scope and general arrangement of the Work under this Contract. The Contractor shall follow these drawings in laying out the equipment, piping and ductwork. Drawings are not intended to be scaled for roughing in measurements or to serve as shop drawings. Where job conditions require minor changes or adjustments in the indicated locations or arrangement of the Work, such changes shall be made without change in the Contract amount.

E. Follow dimensions without regard to scale. Where no figures or notations are given, the Plans shall be followed.

1.4 UTILITIES

A. The location and sizes of electrical, mechanical, and plumbing service facilities are shown in accordance with data secured from existing record drawings and site observations. Data shown are offered as an estimating guide without guarantee of accuracy. Check and verify all data given, and verify the exact location of all utility services pertaining to Work before excavation or performing Work. Verify supply and return piping before making the connection to existing utilities.

1.5 APPLICABLE REFERENCE STANDARDS, CODES AND REGULATIONS

A. Meet requirements of all state codes having jurisdiction.

B. State of California Code of Regulations:
1. Title 8, Industrial Relations
2. Title 19, State Fire Marshal Regulations
3. Current California Building Code (CBC), Title 24, Part 2
4. Current California Electrical Code, Title 24, Part 3
5. Current California Mechanical Code, Title 24, Part 4
6. Current California Plumbing Code, Title 24, Part 5
7. Current California Energy Code, Title 24, Part 6
8. Current California Fire Code, Title 24, Part 9
9. Current California Standards Code, Title 24, Part 12

C. Additional Referenced Standards:
1. AABC Associated Air Balance Council
2. AMCA Air Moving and Conditioning Association
3. AHRI Air-Conditioning, Heating and Refrigeration Institute
4. ASHRAE American Society of Heating, Refrigeration and Air Conditioning Engineers
5. ASME American Society of Mechanical Engineers
6. ASTM American Society for Testing and Materials
7. NEMA National Electrical Manufacturer's Association
8. NFPA National Fire Protection Association Standards
9. PDIPlumbing and Drainage Institute
10. UL Underwriters Laboratories

D. Codes and ordinances having jurisdiction over Work are minimum requirements; but, if Contract Documents indicate requirements, which are in excess of those minimum requirements, then requirements of the Contract Documents shall be followed. Should there be any conflicts between Contract Documents or codes or any ordinances having jurisdiction, report these to the Owner's Representative.

E. Obtain permits, and request inspections from authority having jurisdiction.

1.6 PROJECT AND SITE CONDITIONS

A. The arrangement of and connection to equipment shown on the Drawings is based upon information available and is not intended to show exact dimensions peculiar to a specific

manufacturer. The Drawings are, in part, diagrammatic and some features of the illustrated equipment installations may require revision to meet actual equipment installation requirements. Structural supports, housekeeping pads, piping connections and adjacent equipment may have to be altered to accommodate the equipment provided. No additional payment will be made for such revisions or alterations.

B. Examine all Drawings and Specifications to be fully cognizant of all work required under this Division.

C. Examine site related work and surfaces before starting work of any Section.

D. Install Work in locations shown on approved Drawings, unless prevented by Project conditions.

E. Prepare drawings showing proposed rearrangement of Work to meet Project conditions, including changes to Work specified in other Sections. Obtain permission from the Owner's Representative before proceeding.

1.7 COOPERATION WITH WORK UNDER OTHER DIVISIONS

A. Cooperate with other trades to facilitate general progress of Work. Allow all other trades every reasonable opportunity for installation of their work.

B. Work under this Division shall follow general building construction closely. Set pipe sleeves and inserts and verify that openings for chases and pipes are provided.

C. Work with other trades in determining exact location of outlets, pipes, and pieces of equipment to avoid interference with lines required to maintain proper installation of Work.

D. Make such progress in the Work to not delay work of other trades.

E. Mechanical Work shall have precedence over the other in the following sequence:
   1. Soil and waste piping
   2. Ductwork
   3. Domestic water piping
   4. Fire sprinkler piping

1.8 DISCREPANCIES

A. The Contractor shall check all Drawings furnished him immediately upon their receipt and shall promptly notify the Owner's Representative of any discrepancies. Figures marked on Drawings shall in general be followed in preference to scale measurements. Piping and instrumentation diagrams shall in general govern floor plans and sections. Large-scale drawings shall in general govern small-scale drawings.

B. Where requirements between Drawings and Specifications conflict, the more restrictive provisions shall apply.

C. If any part of the Specifications or Drawings appears unclear or contradictory, apply to Owner's Representative for interpretation and decision as early as possible, including during bidding period. Do not proceed with such work without Owner Representatives decision. Beginning work of any Section constitutes acceptance of conditions.

1.9 CHANGES

A. The Contractor shall be responsible to make and obtain approval from the Owner's Representative for all necessary adjustments in piping and equipment layouts as required to accommodate the relocations of equipment and/or devices, which are affected by any approved authorized changes or Product substitutions. All changes shall be clearly indicated on the "Record" drawings.

1.10 SUBMITTALS

A. Refer to Division 01 for additional requirements.

B. The manufacturer, contractor or supplier shall include a written statement that the submitted equipment, hardware or accessory complies with the requirement of that particular specification section.

C. The manufacturer shall resubmit the specification section showing compliance with each respective paragraphs and specified items and features in that particular specification section.

D. All **exceptions** shall be clearly identified by referencing respective paragraph and other requirements along with proposed alternative.

E. Note that prior to acceptance of submittals for review, a submittal schedule shall be submitted to the Owner's Representative.

F. Submit all Division 23 shop drawings and product data grouped and referenced by the specification technical section number in one complete submittal package.

G. Shop Drawings:
   1. Include installation details of equipment indicating proposed location, layout and arrangement, accessories, piping, and other items that must be shown to assure a coordinated installation.
   2. Indicate adequate clearance for operation, maintenance, and replacement of operating equipment devices.
   3. If equipment is rejected, revise drawings to show acceptable equipment and resubmit.

H. Whenever more than one (1) manufacturer's product is specified, the first named product is the basis of design used in the Drawings and the use of alternate-named manufacturer's products or substitutes may require modifications to the design.

I. The Contractor shall be responsible for all equipment ordered and/or installed prior to receipt of shop drawings returned from the Owner's Representative bearing the Owner's Representative stamp of "Reviewed". All corrections or modifications to the equipment as noted on the shop

drawings shall be performed and equipment removed from the job site at the request of the Owner's Representative without additional compensation.

J. Manufacturer's Data: For each manufactured item, provide current manufacturer's descriptive literature of cataloged products, certified equipment drawings, diagrams, performance and characteristic curves if applicable, and catalog cuts.

K. Standard Compliance: When materials or equipment provided by the Contractor must conform to the standards of organizations such as American National Standards Institute (ANSI) or UL, submit proof of such conformance to the Owner Representative for approval. If an organization uses a label or listing to indicate compliance with a particular standard, the label or listing will be acceptable evidence, unless otherwise specified. In lieu of the label or listing, submit a certificate from an independent testing organization, which is competent to perform acceptance testing and is approved by the Owner Representative. The certificate shall state that the item has been tested in accordance with the specified organization's test methods and that the item conforms to the specified organization's standard.

L. Certified Test Reports: Before delivery of materials and equipment, certified copies of all test reports specified in individual sections shall be submitted for approval.

M. Certificates of Compliance or Conformance: Submit manufacturer's certifications as required on products, materials, finish, and equipment indicated in the technical sections. Certifications shall be documents prepared specifically for this Contract. Pre-printed certifications and copies of previously submitted documents will not be acceptable. The manufacturer's certifications shall name the appropriate products, equipment, or materials and the publication specified as controlling the quality of that item. Certification shall not contain statements to imply that the item does not meet requirements specified, such as "as good as"; or "achieve the same end use and results as materials formulated in accordance with the referenced publications"; or "equal or exceed the service and performance of the specified material." Certifications shall simply state that the item conforms to the requirements specified. Certificates shall be printed on the manufacturer's letterhead and shall be signed by the manufacturer's official authorized to sign certificates of compliance or conformance.

1.11 PROJECT RECORD DOCUMENTS

A. Refer to Division 01 for additional requirements.
   1. All changes, deviations and information recorded on the "Project Record Drawings" set during Construction shall be redrafted onto the latest version of AutoCAD or Revit, where applicable.
   2. Submit completed shop drawings to the Owner prior to completion in AutoCAD format. Contractor hand marked or drafted redlined "Project Record Drawings" will not be accepted.

1.12 PRODUCT ALTERNATIVES OR SUBSTITUTIONS

A. Refer to General Conditions and Division 01 for additional requirements.

1.13 OPERATING INSTRUCTIONS

A. Furnish approved operating instructions for systems and equipment indicated in the technical sections for use by operation and maintenance personnel.

1.14 MANUFACTURER'S RECOMMENDATIONS

A. Where installation procedures or any part thereof are required to be in accordance with manufacturer's recommendations, furnish printed copies of the recommendations prior to installation. Installation of the item shall not proceed until recommendations are received. Failure to furnish recommendations shall be cause for rejection of the equipment or material.

1.15 DELIVERY AND STORAGE

A. Refer to Division 01 for additional requirements.

B. Handle, store, and protect equipment and materials in accordance with the manufacturer's recommendations and with the requirements of NFPA 70B P, Appendix I, titled "Equipment Storage and Maintenance During Construction." Replace damaged or defective items with new items.

1.16 GUARANTEE

A. Except as may be specified under other sections in the Specifications, guarantee all equipment furnished under the Specifications for a period of one year from date of project acceptance against defective workmanship and material and improper installation. Upon notification of failure, correct deficiency immediately and without cost to the Owner.

B. Standard warranty of manufacturer shall apply for replacement of parts after expiration of the above period. Manufacturer shall furnish replacement parts to the Owner for their service agency as directed.

PART 2 - PRODUCTS

Not Applicable.

PART 3 - EXECUTION

3.1 GENERAL

A. Obtain and pay for all permits and inspections, including any independent testing required to verify standard compliance, and deliver certificates for same to the Owner’s Representative.

3.2 WORK RESPONSIBILITIES

A. The drawings indicate diagrammatically the desired locations or arrangement of piping, equipment, etc., and are to be followed as closely as possible. Proper judgment must be exercised in executing the work to secure the best possible installation in the available space and to overcome local difficulties due to space limitations or interference with structural conditions.

B. The Contractor is responsible for the correct placing of Work and the proper location and connection of Work in relation to the work of other trades. Advise appropriate trade as to locations of access panels.

C. In the event changes in the indicated locations or arrangements are necessary, due to developed conditions in the building construction or rearrangement of furnishings or equipment, such changes shall be made without extra cost, providing the change is ordered before the ductwork, piping, etc. and work directly connected to same is installed and no extra materials are required.

D. Where equipment is furnished by others, verify dimensions and the correct locations of this equipment before proceeding with the roughing-in of connections.

E. All scaled and figured dimensions are approximate of typical equipment of the class indicated. Before proceeding with any work, carefully check and verify all dimensions, sizes, etc. with the drawings to see that the equipment will fit into the spaces provided without violation of applicable codes.

F. Should any changes to the Work indicated on the Drawings or described in the Specifications be necessary in order to comply with the above requirements, notify the Owner immediately and cease work on all parts of the contract, which are affected until approval for any required modifications to the construction has been obtained from the Owner.

G. Be responsible for any cooperative work, which must be altered due to lack of proper supervision or failure to make proper provisions in time. Such changes shall be under direction of the Owner and shall be made to his satisfaction. Perform all Work with competent and skilled personnel.

H. All work, including aesthetic as well as mechanical aspects of the Work, shall be of the highest quality consistent with the best practices of the trade.

I. Replace or repair, without additional compensation, any Work, which, in the opinion of the Owner, does not comply with these requirements.

3.3 PAINTING

A. Refer to Division 09 for additional requirements.

B. Factory Applied:
   1. Mechanical equipment shall have factory-applied painting systems, which shall, as a minimum, meet the requirements of NEMA ICS 6 corrosion-resistance test, except equipment specified to meet requirements of ANSI C37.20 shall have a finish as specified in ANSI C37.20.
   2. Refer to individual sections of this Division for more stringent requirements.

C. Field Applied:
   1. Paint all mechanical equipment as required to touch up, to match finish on other equipment in adjacent spaces or to meet safety criteria.
   2. Paint all exposed, uninsulated mechanical piping, valves, supports, hangers and appurtenances. Provide minimum 5 mils dry film thickness.
   3. Paint ductwork flat black that are visible behind air outlets and inlets.
   4. Paint all exposed and rooftop ductwork, roof mounted mechanical equipment, ductwork supports, hangers and appurtenances.
   5. Paint shall be a high performance polyurethane enamel coating system.
      a. Acceptable paint manufacturers include Ameron, Tnemec or engineer approved equal.
      b. Acceptable primer manufacturers include Ameron Amershield VOC, Tnemec's Series 1075 (1074) Endura-Shield, semi-gloss (gloss) sheen or equal.
      c. Provide minimum 5 mils dry film thickness.

END OF SECTION 230000

SECTION 230517 - SLEEVES AND SLEEVE SEALS FOR HVAC PIPING

PART 1 - GENERAL

1.1 RELATED DOCUMENTS

A. Drawings and general provisions of the Contract, including General and Supplementary Conditions and Division 01 Specification Sections, apply to this Section.

1.2 SUMMARY

A. Section Includes:
1. Sleeves.
2. Stack-sleeve fittings.
3. Sleeve-seal systems.
4. Sleeve-seal fittings.
5. Grout.
6. Silicone sealants.

B. Related Requirements:
1. Section 078413 "Penetration Firestopping" for penetration firestopping installed in fire-resistance-rated walls, horizontal assemblies, and smoke barriers, with and without penetrating items.

1.3 ACTION SUBMITTALS

A. Submittals shall be formatted per Section 230000 “General Mechanical Requirements”. The manufacturer shall resubmit the specification section showing compliance with each respective paragraphs and specified items and features in that particular specification section. All **exceptions** shall be clearly identified by referencing respective paragraph and other requirements. Next to each specification item, indicate the following:
1. “No Exception Taken”.
2. “Exception”. All exceptions shall be clearly identified by referencing respective paragraph and other requirements along with proposed alternative.

B. Product Data: For each type of product.

PART 2 - PRODUCTS

2.1 SLEEVES

A. Galvanized-Steel Sheet: 0.0239-inch minimum thickness; round tube closed with welded longitudinal joint.

B. Steel Pipe: ASTM A 53, Type E, Grade B, Schedule 40, galvanized, plain ends.

C. Stack Sleeve Fittings: Manufactured, cast-iron sleeve with integral clamping flange. Include clamping ring and bolts and nuts for membrane flashing.
   1. Underdeck Clamp: Clamping ring with set screws.

2.2 SLEEVE-SEAL SYSTEMS

A. Manufacturers: Subject to compliance with requirements, provide products by one of the following:
   1. Thunderline Modular Seals; Link-Seal
   2. Advance Products & Systems, Inc.
   3. Calpico, Inc.
   4. Metraflex Co.
   5. Pipeline Seal and Insulator, Inc.

B. Description: Modular sealing-element unit, designed for field assembly, for filling annular space between piping and sleeve. Designed to form a hydrostatic seal of 20-psig minimum.
   1. Sealing Elements: EPDM interlocking links shaped to fit surface of pipe. Include type and number required for pipe material and size of pipe.
   2. Pressure Plates: Stainless steel. Include two for each sealing element.
   3. Connecting Bolts and Nuts: Stainless steel of length required to secure pressure plates to sealing elements. Include one for each sealing element.
   4. Link-Seal shall be basis of design.

2.3 GROUT

A. Description: ASTM C 1107, Grade B, nonshrink and nonmetallic, dry hydraulic-cement grout.
   1. Characteristics: Post-hardening, volume-adjusting, nonstaining, noncorrosive, nongaseous, and recommended for interior and exterior applications.
   2. Design Mix: 5000-psi, 28-day compressive strength.
   3. Packaging: Premixed and factory packaged.

PART 3 - EXECUTION

3.1 SLEEVE INSTALLATION

A. Sleeves are not required for core-drilled holes, except where spill control is required

B. Install sleeves for pipes passing through interior concrete and masonry walls, and concrete floor and roof slabs.
   1. Cut sleeves to length for mounting flush with both surfaces.
      a. Exception: Extend sleeves installed in floors of mechanical equipment areas or other wet areas 2 inches above finished floor level. Extend cast-iron sleeve fittings below floor slab as required to secure clamping ring if ring is specified.

b. Exception: Extend sleeves installed in floors for areas indicated 4 inches above finished floor level, including slabs on grade.

2. Install sleeves in new walls and slabs as new walls and slabs are constructed.
3. Install sleeves that are large enough to provide 1/4-inch annular clear space between sleeve and pipe or pipe insulation. Use the following sleeve materials:
   a. Steel Pipe Sleeves: For mechanical rooms, and wet area applications where spill containment is required.
   b. Stack Sleeve Fittings: For pipes penetrating floors with membrane waterproofing. Secure flashing between clamping flanges. Install section of cast-iron soil pipe to extend sleeve to 2 inches above finished floor level. Refer to Division 07 Section "Sheet Metal Flashing and Trim" for flashing.
   c. Seal space outside of sleeve fittings with grout.
4. Except for underground wall penetrations, seal annular space between sleeve and pipe or pipe insulation, using joint sealants appropriate for size, depth, and location of joint. Refer to Division 07 Section "Joint Sealants" for materials and installation.
5. Where required, sleeve application and installation shall comply with UL approved Firestopping Detail.

C. Aboveground, Exterior-Wall Pipe Penetrations: Seal penetrations using sleeves and mechanical sleeve seals. Select sleeve size to allow for 1-inch annular clear space between pipe and sleeve for installing mechanical sleeve seals.
   1. Install steel pipe for sleeves.
   2. Mechanical Sleeve Seal Installation: Select type and number of sealing elements required for pipe material and size. Position pipe in center of sleeve. Assemble mechanical sleeve seals and install in annular space between pipe and sleeve. Tighten bolts against pressure plates that cause sealing elements to expand and make watertight seal.

D. Underground, Exterior-Wall Pipe Penetrations: Seal pipe penetrations using mechanical sleeve seals. Select penetration size to allow for 1-inch annular clear space between pipe and penetration for installing mechanical sleeve seals.
   1. Mechanical Seal Installation: Select type and number of sealing elements required for pipe material and size. Position pipe in center of sleeve. Assemble mechanical seals and install in annular space between pipe and sleeve. Tighten bolts against pressure plates that cause sealing elements to expand and make watertight seal.

3.2 GROUTING

A. Mix and install grout for mechanical equipment base bearing surfaces, pump and other equipment base plates, and anchors.

B. Clean surfaces that will come into contact with grout.

C. Provide forms as required for placement of grout.

D. Avoid air entrapment during placement of grout.

E. Place grout, completely filling equipment bases.

F. Place grout on concrete bases and provide smooth bearing surface for equipment.

G. Place grout around anchors.

H. Cure placed grout.

3.3 FIELD QUALITY CONTROL

A. Perform the following tests and inspections:
   1. Leak Test: After allowing for a full cure, test sleeves and sleeve seals for leaks. Repair leaks and retest until no leaks exist.

B. Sleeves and sleeve seals will be considered defective if they do not pass tests and inspections.

END OF SECTION 230517

SECTION 230518 - ESCUTCHEONS FOR HVAC PIPING

PART 1 - GENERAL

1.1 RELATED DOCUMENTS

A. Drawings and general provisions of the Contract, including General and Supplementary Conditions and Division 01 Specification Sections, apply to this Section.

1.2 SUMMARY

A. Section Includes:
   1. Escutcheons.
   2. Floor plates.

1.3 DEFINITIONS

1.4 ACTION SUBMITTALS

A. Submittals shall be formatted per Section 230000 “General Mechanical Requirements”. The manufacturer shall resubmit the specification section showing compliance with each respective paragraphs and specified items and features in that particular specification section. All **exceptions** shall be clearly identified by referencing respective paragraph and other requirements. Next to each specification item, indicate the following:
   1. “No Exception Taken”.
   2. “Exception”. All exceptions shall be clearly identified by referencing respective paragraph and other requirements along with proposed alternative.

B. Product Data: For each type of product.

PART 2 - PRODUCTS

2.1 MANUFACTURERS

A. Brasscraft Manufacturing Company

B. The Keeney Manufacturing Company

C. Mid-America Fittings, Inc.

D. Or Approved Equal

2.2 ESCUTCHEONS

A. One-Piece, Steel Type: With polished, chrome plated finish and setscrew fastener.

B. One-Piece, Stainless-Steel Type: With polished stainless-steel finish.

C. One-Piece, Cast-Brass Type: With polished, chrome plated finish and setscrew fastener.

D. One-Piece, Deep-Pattern Type: Deep-drawn, box-shaped steel with polished, chrome-plated finish and spring-clip fasteners.

E. One-Piece, Stamped-Steel Type: With polished, chrome-plated finish and spring-clip fasteners.

F. Split-Plate, Stamped-Steel Type: With polished, chrome-plated finish; concealed hinge; and spring-clip fasteners.

2.3 FLOOR PLATES

A. One Piece Floor Plates: Cast-iron flange with holes for fasteners.

B. Split Floor Plates: Steel with concealed hinge.

PART 3 - EXECUTION

3.1 INSTALLATION

A. Install escutcheons for piping penetrations of walls, ceilings, and finished floors.

B. Install escutcheons with ID to closely fit around pipe, tube, and insulation of piping and with OD that completely covers opening.
   1. Escutcheons for New Piping:
      a. Piping with Fitting or Sleeve Protruding from Wall: One-piece, deep pattern.
      b. Chrome-Plated Piping: One-piece steel with polished, chrome-plated finish.
      c. Insulated Piping: One-piece steel with polished, chrome finish.
      d. Insulated Piping: One-piece stainless steel with polished stainless-steel finish.
      e. Insulated Piping: One-piece cast brass with polished, chrome finish.
      f. Insulated Piping: One-piece stamped steel with polished, chrome-plated finish.
      g. Bare Piping at Wall and Floor Penetrations in Finished Spaces: One-piece steel with polished, chrome finish.
      h. Bare Piping at Wall and Floor Penetrations in Finished Spaces: One-piece stainless steel with polished stainless-steel finish.
      i. Bare Piping at Wall and Floor Penetrations in Finished Spaces: One-piece cast brass with polished, chrome finish.
      j. Bare Piping at Wall and Floor Penetrations in Finished Spaces: One-piece stamped steel with polished, chrome-plated finish.
      k. Bare Piping at Ceiling Penetrations in Finished Spaces: One-piece steel with polished, finish.

l. Bare Piping at Ceiling Penetrations in Finished Spaces: One-piece stainless steel with polished stainless-steel finish.
m. Bare Piping at Ceiling Penetrations in Finished Spaces: One-piece cast brass with polished, chrome finish.
n. Bare Piping at Ceiling Penetrations in Finished Spaces: One-piece stamped steel with polished, chrome-plated finish.
o. Bare Piping in Unfinished Service Spaces: One-piece steel with polished, chrome-plated finish.
p. Bare Piping in Unfinished Service Spaces: One-piece cast brass with polished, chrome finish.
q. Bare Piping in Unfinished Service Spaces: One-piece stamped steel with polished, chrome-plated finish.
r. Bare Piping in Equipment Rooms: One-piece steel with polished, chrome-plated finish.
s. Bare Piping in Equipment Rooms: One-piece cast brass with polished, chrome finish.
t. Bare Piping in Equipment Rooms: One-piece stamped steel with polished, chrome-plated finish.
u.

C. Install floor plates for piping penetrations of equipment-room floors.

D. Install floor plates with ID to closely fit around pipe, tube, and insulation of piping and with OD that completely covers opening.
1. New Piping: One piece floor plate.
2. Existing Piping to Remain: One Piece floor plate.

3.2 FIELD QUALITY CONTROL

A. Using new materials, replace broken and damaged escutcheons and floor plates.

END OF SECTION 230518

SECTION 230529 - HANGERS AND SUPPORTS FOR HVAC PIPING AND EQUIPMENT

PART 1 - GENERAL

1.1 RELATED DOCUMENTS

A. Drawings and general provisions of the Contract, including General and Supplementary Conditions and Division 01 Specification Sections, apply to this Section.

1.2 SUMMARY

A. Section Includes:
1. Metal pipe hangers and supports.
2. Trapeze pipe hangers.
3. Metal framing systems.
4. Thermal-hanger shield inserts.
5. Fastener systems.
6. Pipe stands.
7. Equipment supports.

B. Related Sections:
1. Section 055000 "Metal Fabrications" for structural-steel shapes and plates for trapeze hangers for pipe and equipment supports.
2. Section 230516 "Expansion Fittings and Loops for HVAC Piping" for pipe guides and anchors.
3. Section 230548 "Vibration and Seismic Controls for HVAC" for vibration isolation devices.
4. Section 233113 "Metal Ducts" and Section 233116 "Nonmetal Ducts" for duct hangers and supports.

1.3 REFERENCES

A. ASME B31.9 Building Services Piping

B. MSS SP58 Pipe Hangers and Supports – Materials, Design, Manufacture, Selection, Application and installation

C. MSS SP-69 Pipe Hangers and Supports – Selection and Application

D. MSS SP-89 Pipe Hangers and Supports – Fabrication and Installation Practices

1.4 DEFINITIONS

A. ASCE: American Society of Civil Engineers

B. ASME: American Society of Mechanical Engineers

C. ASTM: America Society for Testing and Material

D. MSS: Manufacturers Standardization Society of the Valve and Fittings Industry Inc.

E. MFMA: Metal Framing Manufacturers Association

F. SEI: Structural Engineering Institute

1.5 PERFORMANCE REQUIREMENTS

A. Delegated Design: Design trapeze pipe hangers and equipment supports, including comprehensive engineering analysis by a qualified professional engineer, using performance requirements and design criteria indicated.

B. Structural Performance: Hangers and supports for HVAC piping and equipment shall withstand the effects of gravity loads and stresses within limits and under conditions indicated according to Standard ASCE/SEI 7 – Minimum Design Loads for Buildings and Other Structures.
   1. Design supports for multiple pipes, including pipe stands, capable of supporting combined weight of supported systems, system contents, and test water.
   2. Design equipment supports capable of supporting combined operating weight of supported equipment and connected systems and components.
   3. Design seismic-restraint hangers and supports for piping and equipment and obtain approval from authorities having jurisdiction.

1.6 ACTION SUBMITTALS

A. Submittals shall be formatted per Section 230000 “General Mechanical Requirements”. The manufacturer shall resubmit the specification section showing compliance with each respective paragraphs and specified items and features in that particular specification section. All **exceptions** shall be clearly identified by referencing respective paragraph and other requirements. Next to each specification item, indicate the following:
   1. “No Exception Taken”.
   2. “Exception”. All exceptions shall be clearly identified by referencing respective paragraph and other requirements along with proposed alternative.

B. Product Data: For each type of product indicated including component cut sheets and pre-approved details.

C. Shop Drawings: Signed and sealed by a qualified professional engineer. Show fabrication and installation details and include calculations for the following; include Product Data for components:
   1. Trapeze pipe hangers.
   2. Metal framing systems.
   3. Pipe stands.
   4. Equipment supports.

D. Delegated Design Submittal: For trapeze hangers indicated to comply with performance requirements and design criteria, including analysis data signed and sealed by the qualified professional engineer responsible for their preparation.
   1. Detail fabrication and assembly of trapeze hangers.
   2. Design Calculations: Calculate requirements for designing trapeze hangers.

1.7 INFORMATIONAL SUBMITTALS

A. Welding certificates.

1.8 QUALITY ASSURANCE

A. Structural Steel Welding Qualifications: Qualify procedures and personnel according to AWS D1.1/D1.1M, "Structural Welding Code - Steel."

B. Pipe Welding Qualifications: Qualify procedures and operators according to current ASME Boiler and Pressure Vessel Code.

PART 2 - PRODUCTS

2.1 PERFORMANCE REQUIREMENTS

A. Delegated Design: Engage a qualified professional engineer, as defined in Section 014000 "Quality Requirements," to design trapeze pipe hangers and equipment supports.

B. Structural Performance: Hangers and supports for HVAC piping and equipment shall withstand the effects of gravity loads and stresses within limits and under conditions indicated according to ASCE 7.
   1. Design supports for multiple pipes, including pipe stands, capable of supporting combined weight of supported systems, system contents, and test water.
   2. Design equipment supports capable of supporting combined operating weight of supported equipment and connected systems and components.
   3. Design seismic-restraint hangers and supports for piping and equipment and obtain approval from authorities having jurisdiction.

2.2 METAL PIPE HANGERS AND SUPPORTS

A. Carbon-Steel Pipe Hangers and Supports:
   1. Description: MSS SP-58, Types 1 through 58, factory-fabricated components.
   2. Galvanized Metallic Coatings: Pregalvanized or hot dipped.
   3. Nonmetallic Coatings: Plastic coating, jacket, or liner.
   4. Padded Hangers: Hanger with fiberglass or other pipe insulation pad or cushion to support bearing surface of piping.
   5. Hanger Rods: Continuous-thread rod, nuts, and washer made of carbon steel.

B. Stainless-Steel Pipe Hangers and Supports:
   1. Description: MSS SP-58, Types 1 through 58, factory-fabricated components.
   2. Padded Hangers: Hanger with fiberglass or other pipe insulation pad or cushion to support bearing surface of piping.
   3. Hanger Rods: Continuous-thread rod, nuts, and washer made of stainless steel.

C. Copper Pipe Hangers:
   1. Description: MSS SP-58, Types 1 through 58, copper-coated-steel, factory-fabricated components.
   2. Hanger Rods: Continuous-thread rod, nuts, and washer made of copper-coated steel stainless steel.

2.3 TRAPEZE PIPE HANGERS

A. Description: MSS SP-69, Type 59, shop- or field-fabricated pipe-support assembly made from structural carbon-steel shapes with MSS SP-58 carbon-steel hanger rods, nuts, saddles, and U-bolts.

2.4 METAL FRAMING SYSTEMS

A. MFMA Manufacturer Metal Framing Systems:
   1. Description: Shop or field-fabricated pipe-support assembly made of steel channels, accessories, fittings, and other components for supporting multiple parallel pipes.
   2. Standard: MFMA-4.
   3. Channels: Continuous slotted steel channel with in-turned lips.
   4. Channel Nuts: Formed or stamped steel nuts or other devices designed to fit into channel slot and, when tightened, prevent slipping along channel.
   5. Hanger Rods: Continuous-thread rod, nuts, and washer made of carbon steel.
   6. Metallic Coating: Electroplated zinc, Mill galvanized, In-line, hot galvanized or Mechanically-deposited zinc.

B. Non-MFMA Manufacturer Metal Framing Systems:
   1. Description: Shop- or field-fabricated pipe-support assembly made of steel channels, accessories, fittings, and other components for supporting multiple parallel pipes.
   2. Standard: Comply with MFMA-4.
   3. Channels: Continuous slotted steel channel with in-turned lips.
   4. Channel Nuts: Formed or stamped steel nuts or other devices designed to fit into channel slot and, when tightened, prevent slipping along channel.
   5. Hanger Rods: Continuous-thread rod, nuts, and washer made of PVC coated carbon steel, hot dipped galvanized carbon steel or stainless steel.

2.5 VERTICAL RISER CLAMPS FOR INSULATED PIPES

A. Vertical Riser Clamps for Insulated Steel Pipes:
   1. Manufacturer shall be Pipe Shields Inc. Model E2100 or equal.
   2. Carbon steel pipe material, steel straps and base that is compliance with ASTM A36.
   3. Insulation shall be calcium silicate, asbestos free, treated with water repellant.

4. Jacket shall be galvanized steel that is in compliance with ASTM A-527.
5. Fasteners shall comply with ASTM A-307 plated.
6. Coating shall be primer coated.

B. Vertical Riser Clamps for Insulated Copper Pipes:
1. Manufacturer shall be Hydra-Zorb Titan Riser Clamp or equal.
2. 25/50 flame spread/smoke spread index.
3. Eliminates insulation compression.
4. Crush resistant.
5. Vertical load rating up to 2400 lbs.

2.6 THERMAL-HANGER SHIELD INSERTS

A. Manufacturers
1. Pipe Shields Inc.
2. Pittsburg Corning Foamglas ONE
3. ITW Insulation Systems TRYMER 2000 XP

B. Cold Piping: Insulation-Insert Material - ASTM C 552, Type II cellular glass with 100-psig or ASTM C 591, Type VI, Grade 1 polyisocyanurate with 125-psig minimum compressive strength and vapor barrier.

C. Hot Piping: Insulation-Insert Material - Hot Piping: Water-repellent treated, ASTM C 533, Type I calcium silicate with 100-psig ASTM C 552, Type II cellular glass with 100-psig or ASTM C 591, Type VI, Grade 1 polyisocyanurate with 125-psig minimum compressive strength.

D. For Trapeze or Clamped Systems: Insert and shield shall cover entire circumference of pipe.

E. For Clevis or Band Hangers: Insert and shield shall cover lower 180 degrees of pipe.

F. Insert Length: Extend 2 inches beyond sheet metal shield for piping operating below ambient air temperature.

2.7 FASTENER SYSTEMS

A. Powder-Actuated Fasteners: Threaded-steel stud, for use in hardened portland cement concrete with pull-out, tension, and shear capacities appropriate for supported loads and building materials where used.

B. Mechanical-Expansion Anchors: Insert-wedge-type, stainless steel anchors, for use in hardened portland cement concrete; with pull-out, tension, and shear capacities appropriate for supported loads and building materials where used.

2.8 PIPE STANDS

A. General Requirements for Pipe Stands: Shop or field-fabricated assemblies made of manufactured corrosion-resistant components to support roof-mounted piping.

B. Compact Pipe Stand: One-piece plastic unit with integral-rod roller, pipe clamps, or V-shaped cradle to support pipe, for roof installation without membrane penetration.

C. Low-Type, Single-Pipe Stand: One-piece stainless-steel base unit with plastic roller, for roof installation without membrane penetration.

D. High-Type, Single-Pipe Stand:
   1. Description: Assembly of base, vertical and horizontal members, and pipe support, for roof installation without membrane penetration.
   2. Base: Stainless steel.
   3. Vertical Members: Two or more cadmium-plated-steel or stainless-steel, continuous-thread rods.
   4. Horizontal Member: Cadmium-plated-steel or stainless-steel rod with plastic or stainless-steel, roller-type pipe support.

E. High-Type, Multiple-Pipe Stand:
   1. Description: Assembly of bases, vertical and horizontal members, and pipe supports, for roof installation without membrane penetration.
   2. Bases: One or more; plastic.
   3. Vertical Members: Two or more protective-coated-steel channels.
   4. Horizontal Member: Protective-coated-steel channel.
   5. Pipe Supports: Galvanized-steel, clevis-type pipe hangers.

F. Curb-Mounted-Type Pipe Stands: Shop or field-fabricated pipe supports made from structural-steel shapes, continuous-thread rods, and rollers, for mounting on permanent stationary roof curb.

2.9 EQUIPMENT SUPPORTS

A. Description: Welded, shop- or field-fabricated equipment support made from structural carbon-steel shapes.

2.10 MISCELLANEOUS MATERIALS

A. Structural Steel: ASTM A 36/A 36M, carbon-steel plates, shapes, and bars; black and galvanized.

B. Grout: ASTM C 1107, factory-mixed and -packaged, dry, hydraulic-cement, non-shrink and nonmetallic grout; suitable for interior and exterior applications.
   1. Properties: Non-staining, noncorrosive, and nongaseous.
   2. Design Mix: 5000-psi, 28-day compressive strength.

PART 3 - EXECUTION

3.1 HANGER AND SUPPORT INSTALLATION

A. Metal Pipe-Hanger Installation: Comply with MSS SP-69 and MSS SP-89. Install hangers, supports, clamps, and attachments as required to properly support piping from the building structure.

B. Metal Trapeze Pipe-Hanger Installation: Comply with MSS SP-69 and MSS SP-89. Arrange for grouping of parallel runs of horizontal piping, and support together on field-fabricated trapeze pipe hangers.
   1. Pipes of Various Sizes: Support together and space trapezes for smallest pipe size or install intermediate supports for smaller diameter pipes as specified for individual pipe hangers.
   2. Field fabricate from ASTM A 36/A 36M, carbon-steel shapes selected for loads being supported. Weld steel according to AWS D1.1/D1.1M.

C. Metal Framing System Installation: Arrange for grouping of parallel runs of piping, and support together on field-assembled metal framing systems.

D. Thermal-Hanger Shield Installation: Install in pipe hanger or shield for insulated piping.

E. Fastener System Installation:
   1. Install powder-actuated fasteners for use in lightweight concrete or concrete slabs less than 4 inches thick in concrete after concrete is placed and completely cured. Use operators that are licensed by powder-actuated tool manufacturer. Install fasteners according to powder-actuated tool manufacturer's operating manual.
   2. Install mechanical-expansion anchors in concrete after concrete is placed and completely cured. Install fasteners according to manufacturer's written instructions.

F. Pipe Stand Installation:
   1. Pipe Stand Types except Curb-Mounted Type: Assemble components and mount on smooth roof surface. Do not penetrate roof membrane.
   2. Curb-Mounted-Type Pipe Stands: Assemble components or fabricate pipe stand and mount on permanent, stationary roof curb. See Section 077200 "Roof Accessories" for curbs.

G. Install hangers and supports complete with necessary attachments, inserts, bolts, rods, nuts, washers, and other accessories.

H. Equipment Support Installation: Fabricate from welded-structural-steel shapes.

I. Install hangers and supports to allow controlled thermal and seismic movement of piping systems, to permit freedom of movement between pipe anchors, and to facilitate action of expansion joints, expansion loops, expansion bends, and similar units.

J. Install lateral bracing with pipe hangers and supports to prevent swaying.

K. Install building attachments within concrete slabs or attach to structural steel. Install additional attachments at concentrated loads, including valves, flanges, and strainers, NPS 2-1/2 and larger

and at changes in direction of piping. Install concrete inserts before concrete is placed; fasten inserts to forms and install reinforcing bars through openings at top of inserts.

L. Load Distribution: Install hangers and supports so that piping live and dead loads and stresses from movement will not be transmitted to connected equipment.

M. Pipe Slopes: Install hangers and supports to provide indicated pipe slopes and to not exceed maximum pipe deflections allowed by ASME B31.9 for building services piping.

N. Insulated Piping:
1. Attach clamps and spacers to piping.
   a. Piping Operating above Ambient Air Temperature: Clamp may project through insulation.
   b. Piping Operating below Ambient Air Temperature: Use thermal-hanger shield insert with clamp sized to match OD of insert.
   c. Do not exceed pipe stress limits allowed by ASME B31.9 for building services piping.
2. Install MSS SP-58, Type 39, protection saddles if insulation without vapor barrier is indicated. Fill interior voids with insulation that matches adjoining insulation.
   a. Option: Thermal-hanger shield inserts may be used. Include steel weight-distribution plate for pipe NPS 4 and larger if pipe is installed on rollers.
3. Install MSS SP-58, Type 40, protective shields on cold piping with vapor barrier. Shields shall span an arc of 180 degrees.
   a. Option: Thermal-hanger shield inserts may be used. Include steel weight-distribution plate for pipe NPS 4 and larger if pipe is installed on rollers.
4. Shield Dimensions for Pipe: Not less than the following:
   a. NPS 1/4 to NPS 3-1/2 12 inches long and 0.048 inch thick.
   b. NPS 4: 12 inches long and 0.06 inch thick.
   c. NPS 5 and NPS 6: 18 inches long and 0.06 inch thick.
   d. NPS 8 to NPS 14: 24 inches long and 0.075 inch thick.
   e. NPS 16 to NPS 24: 24 inches long and 0.105 inch thick.
5. Pipes NPS 8 and Larger: Include wood or reinforced calcium-silicate-insulation inserts of length at least as long as protective shield.
6. Thermal-Hanger Shields: Install with insulation same thickness as piping insulation.

3.2 EQUIPMENT SUPPORTS

A. Fabricate structural-steel stands to suspend equipment from structure overhead or to support equipment above floor.

B. Grouting: Place grout under supports for equipment and make bearing surface smooth.

C. Provide lateral bracing, to prevent swaying, for equipment supports.

3.3 METAL FABRICATIONS

A. Cut, drill, and fit miscellaneous metal fabrications for equipment supports.

B. Fit exposed connections together to form hairline joints. Field weld connections that cannot be shop welded because of shipping size limitations.

C. Field Welding: Comply with AWS D1.1/D1.1M procedures for shielded, metal arc welding; appearance and quality of welds; and methods used in correcting welding work; and with the following:
   1. Use materials and methods that minimize distortion and develop strength and corrosion resistance of base metals.
   2. Obtain fusion without undercut or overlap.
   3. Remove welding flux immediately.
   4. Finish welds at exposed connections so no roughness shows after finishing and so contours of welded surfaces match adjacent contours.

3.4 ADJUSTING

A. Hanger Adjustments: Adjust hangers to distribute loads equally on attachments and to achieve indicated slope of pipe.

B. Trim excess length of continuous-thread hanger and support rods to 1-1/2 inches.

3.5 PAINTING

A. Touchup: Clean field welds and abraded areas of shop paint. Paint exposed areas immediately after erecting hangers and supports. Use same materials as used for shop painting. Comply with SSPC-PA 1 requirements for touching up field-painted surfaces.
   1. Apply paint by brush or spray to provide a minimum dry film thickness of 2.0 mils.

B. Touchup: Cleaning and touchup painting of field welds, bolted connections, and abraded areas of shop paint on miscellaneous metal are specified in Section 099113 "Exterior Painting" Section 099123 "Interior Painting" and Section 099600 "High Performance Coatings."

C. Galvanized Surfaces: Clean welds, bolted connections, and abraded areas and apply galvanizing-repair paint to comply with ASTM A 780.

3.6 HANGER AND SUPPORT SCHEDULE

A. Specific hanger and support requirements are in Sections specifying piping systems and equipment.

B. Comply with MSS SP-69 for pipe-hanger selections and applications that are not specified in piping system Sections.

C. Use hangers and supports with galvanized metallic coatings for piping and equipment that will not have field-applied finish.

D. Use nonmetallic coatings on attachments for electrolytic protection where attachments are in direct contact with copper tubing.

E. Use carbon-steel pipe hangers and supports, metal trapeze pipe hangers and metal framing systems and attachments for general service applications.

F. Use stainless-steel pipe hangers and corrosion-resistant attachments for hostile environment applications.

G. Copper Pipe or Tubing
   1. Use copper-plated pipe hangers and copper or stainless-steel attachments for copper piping and tubing.
   2. Or use padded hangers for piping that is subject to scratching.

H. Use thermal-hanger shield inserts for insulated piping and tubing.

I. Horizontal-Piping Hangers and Supports: Unless otherwise indicated and except as specified in piping system Sections, install the following types:
   1. Adjustable, Steel Clevis Hangers (MSS Type 1): For suspension of noninsulated or insulated, stationary pipes NPS 1/2 to NPS 30.
   2. Yoke-Type Pipe Clamps (MSS Type 2): For suspension of up to 1050 deg F, pipes NPS 4 to NPS 24, requiring up to 4 inches of insulation.
   3. Carbon- or Alloy-Steel, Double-Bolt Pipe Clamps (MSS Type 3): For suspension of pipes NPS 3/4 to NPS 36, requiring clamp flexibility and up to 4 inches of insulation.
   4. Steel Pipe Clamps (MSS Type 4): For suspension of cold and hot pipes NPS 1/2 to NPS 24 if little or no insulation is required.
   5. Pipe Hangers (MSS Type 5): For suspension of pipes NPS 1/2 to NPS 4, to allow off-center closure for hanger installation before pipe erection.
   6. Adjustable, Swivel Split- or Solid-Ring Hangers (MSS Type 6): For suspension of noninsulated, stationary pipes NPS 3/4 to NPS 8.
   7. Adjustable, Steel Band Hangers (MSS Type 7): For suspension of noninsulated, stationary pipes NPS 1/2 to NPS 8.
   8. Adjustable Band Hangers (MSS Type 9): For suspension of noninsulated, stationary pipes NPS 1/2 to NPS 8.
   9. Adjustable, Swivel-Ring Band Hangers (MSS Type 10): For suspension of noninsulated, stationary pipes NPS 1/2 to NPS 8.
   10. Split Pipe Ring with or without Turnbuckle Hangers (MSS Type 11): For suspension of noninsulated, stationary pipes NPS 3/8 to NPS 8.
   11. Extension Hinged or Two-Bolt Split Pipe Clamps (MSS Type 12): For suspension of noninsulated, stationary pipes NPS 3/8 to NPS 3.
   12. U-Bolts (MSS Type 24): For support of heavy pipes NPS 1/2 to NPS 30.
   13. Clips (MSS Type 26): For support of insulated pipes not subject to expansion or contraction.
   14. Pipe Saddle Supports (MSS Type 36): For support of pipes NPS 4 to NPS 36, with steel-pipe base stanchion support and cast-iron floor flange or carbon-steel plate.
   15. Pipe Stanchion Saddles (MSS Type 37): For support of pipes NPS 4 to NPS 36, with steel-pipe base stanchion support and cast-iron floor flange or carbon-steel plate, and with U-bolt to retain pipe.
   16. Adjustable Pipe Saddle Supports (MSS Type 38): For stanchion-type support for pipes NPS 2-1/2 to NPS 36 if vertical adjustment is required, with steel-pipe base stanchion support and cast-iron floor flange.
   17. Single-Pipe Rolls (MSS Type 41): For suspension of pipes NPS 1 to NPS 30, from two rods if longitudinal movement caused by expansion and contraction might occur.

18. Adjustable Roller Hangers (MSS Type 43): For suspension of pipes NPS 2-1/2 to NPS 24, from single rod if horizontal movement caused by expansion and contraction might occur.
19. Complete Pipe Rolls (MSS Type 44): For support of pipes NPS 2 to NPS 42 if longitudinal movement caused by expansion and contraction might occur but vertical adjustment is not necessary.
20. Pipe Roll and Plate Units (MSS Type 45): For support of pipes NPS 2 to NPS 24 if small horizontal movement caused by expansion and contraction might occur and vertical adjustment is not necessary.
21. Adjustable Pipe Roll and Base Units (MSS Type 46): For support of pipes NPS 2 to NPS 30 if vertical and lateral adjustment during installation might be required in addition to expansion and contraction.

J. Vertical-Piping Clamps: Unless otherwise indicated and except as specified in piping system Sections, install the following types:
1. Extension Pipe or Riser Clamps (MSS Type 8): For support of non-insulated pipe risers NPS 3/4 to NPS 24.
2. Carbon- or Alloy-Steel Riser Clamps (MSS Type 42): For support of non-insulated pipe risers NPS 3/4 to NPS 24 if longer ends are required for riser clamps.
3. Insulated piping shall use vertical riser clamps for insulated pipe.

K. Hanger-Rod Attachments: Unless otherwise indicated and except as specified in piping system Sections, install the following types:
1. Steel Turnbuckles (MSS Type 13): For adjustment, up to 6 inches for heavy loads.
2. Steel Clevises (MSS Type 14): For 120 to 450 deg F piping installations.
3. Swivel Turnbuckles (MSS Type 15): For use with MSS Type 11, split pipe rings.
4. Malleable-Iron Sockets (MSS Type 16): For attaching hanger rods to various types of building attachments.
5. Steel Weldless Eye Nuts (MSS Type 17): For 120 to 450 deg F piping installations.

L. Building Attachments: Unless otherwise indicated and except as specified in piping system Sections, install the following types:
1. Steel or Malleable Concrete Inserts (MSS Type 18): For upper attachment to suspend pipe hangers from concrete ceiling.
2. Top-Beam C-Clamps (MSS Type 19): For use under roof installations with bar-joist construction, to attach to top flange of structural shape.
3. Side-Beam or Channel Clamps (MSS Type 20): For attaching to bottom flange of beams, channels, or angles.
4. Center-Beam Clamps (MSS Type 21): For attaching to center of bottom flange of beams.
5. Welded Beam Attachments (MSS Type 22): For attaching to bottom of beams if loads are considerable and rod sizes are large.
6. C-Clamps (MSS Type 23): For structural shapes.
7. Top-Beam Clamps (MSS Type 25): For top of beams if hanger rod is required tangent to flange edge.
8. Side-Beam Clamps (MSS Type 27): For bottom of steel I-beams.
9. Steel-Beam Clamps with Eye Nuts (MSS Type 28): For attaching to bottom of steel I-beams for heavy loads.
10. Linked-Steel Clamps with Eye Nuts (MSS Type 29): For attaching to bottom of steel I-beams for heavy loads, with link extensions.
11. Malleable-Beam Clamps with Extension Pieces (MSS Type 30): For attaching to structural steel.

12. Welded-Steel Brackets: For support of pipes from below or for suspending from above by using clip and rod. Use one of the following for indicated loads:
    a. Light (MSS Type 31): 750 lb.
    b. Medium (MSS Type 32): 1500 lb.
    c. Heavy (MSS Type 33): 3000 lb.
13. Side-Beam Brackets (MSS Type 34): For sides of steel or wooden beams.
14. Plate Lugs (MSS Type 57): For attaching to steel beams if flexibility at beam is required.
15. Horizontal Travelers (MSS Type 58): For supporting piping systems subject to linear horizontal movement where headroom is limited.

M. Saddles and Shields: Unless otherwise indicated and except as specified in piping system Sections, install the following types:
1. Steel-Pipe-Covering Protection Saddles (MSS Type 39): To fill interior voids with insulation that matches adjoining insulation.
2. Protection Shields (MSS Type 40): Of length recommended in writing by manufacturer to prevent crushing insulation.
3. Thermal-Hanger Shield Inserts: For supporting insulated pipe.

N. Spring Hangers and Supports: Unless otherwise indicated and except as specified in piping system Sections, install the following types:
1. Restraint-Control Devices (MSS Type 47): Where indicated to control piping movement.
2. Spring Cushions (MSS Type 48): For light loads if vertical movement does not exceed 1-1/4 inches.
3. Spring-Cushion Roll Hangers (MSS Type 49): For equipping Type 41, roll hanger with springs.
4. Spring Sway Braces (MSS Type 50): To retard sway, shock, vibration, or thermal expansion in piping systems.
5. Variable-Spring Hangers (MSS Type 51): Preset to indicated load and limit variability factor to 25 percent to allow expansion and contraction of piping system from hanger.
6. Variable-Spring Base Supports (MSS Type 52): Preset to indicated load and limit variability factor to 25 percent to allow expansion and contraction of piping system from base support.
7. Variable-Spring Trapeze Hangers (MSS Type 53): Preset to indicated load and limit variability factor to 25 percent to allow expansion and contraction of piping system from trapeze support.
8. Constant Supports: For critical piping stress and if necessary to avoid transfer of stress from one support to another support, critical terminal, or connected equipment. Include auxiliary stops for erection, hydrostatic test, and load-adjustment capability. These supports include the following types:
    a. Horizontal (MSS Type 54): Mounted horizontally.
    b. Vertical (MSS Type 55): Mounted vertically.
    c. Trapeze (MSS Type 56): Two vertical-type supports and one trapeze member.

O. Comply with MSS SP-69 for trapeze pipe-hanger selections and applications that are not specified in piping system Sections.

P. Comply with MFMA-103 for metal framing system selections and applications that are not specified in piping system Sections.

Q. Use mechanical-expansion anchors instead of building attachments where required in concrete construction.

END OF SECTION 230529

SECTION 230548 - VIBRATION AND SEISMIC CONTROLS FOR HVAC

PART 1 - GENERAL

1.1 RELATED DOCUMENTS

A. Drawings and general provisions of the Contract, including General and Supplementary Conditions and Division 01 Specification Sections, apply to this Section.

1.2 SUMMARY

A. Section Includes:
1. Elastomeric isolation pads.
2. Elastomeric isolation mounts.
3. Restrained elastomeric isolation mounts.
4. Open-spring isolators.
5. Housed-spring isolators.
6. Restrained-spring isolators.
7. Housed-restrained-spring isolators.
8. Pipe-riser resilient supports.
9. Resilient pipe guides.
10. Air-spring isolators.
11. Restrained-air-spring isolators.
12. Elastomeric hangers.
13. Spring hangers.
14. Snubbers.
15. Restraint channel bracings.
16. Restraint cables.
17. Seismic-restraint accessories.
18. Mechanical anchor bolts.
19. Adhesive anchor bolts.
20. Vibration isolation equipment bases.
21. Restrained isolation roof-curb rails.

B. Related Requirements:
1. Section 210548 "Vibration and Seismic Controls for Fire Suppression" for devices for fire-suppression equipment and systems.
2. Section 220548 "Vibration and Seismic Controls for Plumbing" for devices for plumbing equipment and systems.

1.3 DEFINITIONS

A. IBC: International Building Code.

B. ICC-ES: ICC-Evaluation Service.

C. OSHPD: Office of Statewide Health Planning & Development.

1.4 ACTION SUBMITTALS

A. Submittals shall be formatted per Section 230000 "General Mechanical Requirements". The manufacturer shall resubmit the specification section showing compliance with each respective paragraphs and specified items and features in that particular specification section. All **exceptions** shall be clearly identified by referencing respective paragraph and other requirements. Next to each specification item, indicate the following:
   1. "No Exception Taken".
   2. "Exception". All exceptions shall be clearly identified by referencing respective paragraph and other requirements along with proposed alternative.

B. Product Data: For each type of product.
   1. Include rated load, rated deflection, and overload capacity for each vibration isolation device.
   2. Illustrate and indicate style, material, strength, fastening provision, and finish for each type and size of vibration isolation device and seismic-restraint component required.
      a. Tabulate types and sizes of seismic restraints, complete with report numbers and rated strength in tension and shear as evaluated by [an evaluation service member of ICC-ES] [OSHPD] [an agency acceptable to authorities having jurisdiction].
      b. Annotate to indicate application of each product submitted and compliance with requirements.
   3. Interlocking Snubbers: Include ratings for horizontal, vertical, and combined loads.

C. Shop Drawings:
   1. Detail fabrication and assembly of equipment bases. Detail fabrication including anchorages and attachments to structure and to supported equipment. Include adjustable motor bases, rails, and frames for equipment mounting.
   2. Vibration Isolation Base Details: Detail fabrication including anchorages and attachments to structure and to supported equipment. Include adjustable motor bases, rails, and frames for equipment mounting.

D. Delegated-Design Submittal: For each vibration isolation and seismic-restraint device.
   1. Include design calculations and details for selecting vibration isolators, seismic restraints, and vibration isolation bases complying with performance requirements, design criteria, and analysis data signed and sealed by the qualified professional engineer responsible for their preparation.
   2. Design Calculations: Calculate static and dynamic loading due to equipment weight, operation, and seismic forces required to select vibration isolators and seismic restraints and for designing vibration isolation bases.
      a. Coordinate design calculations with wind load calculations required for equipment mounted outdoors. Comply with requirements in other Sections for equipment mounted outdoors.
   3. Riser Supports: Include riser diagrams and calculations showing anticipated expansion and contraction at each support point, initial and final loads on building structure, spring deflection changes, and seismic loads. Include certification that riser system was examined for excessive stress and that none exists.
   4. Seismic-Restraint Details:

a. Design Analysis: To support selection and arrangement of seismic restraints. Include calculations of combined tensile and shear loads.
b. Details: Indicate fabrication and arrangement. Detail attachments of restraints to the restrained items and to the structure. Show attachment locations, methods, and spacings. Identify components, list their strengths, and indicate directions and values of forces transmitted to the structure during seismic events. Indicate association with vibration isolation devices.
c. Coordinate seismic-restraint and vibration isolation details with wind-restraint details required for equipment mounted outdoors. Comply with requirements in other Sections for equipment mounted outdoors.
d. Preapproval and Evaluation Documentation: By [an evaluation service member of ICC-ES] [OSHPD] [an agency acceptable to authorities having jurisdiction], showing maximum ratings of restraint items and the basis for approval (tests or calculations).

1.5 INFORMATIONAL SUBMITTALS

A. Coordination Drawings: Show coordination of vibration isolation device installation and seismic bracing for HVAC piping and equipment with other systems and equipment in the vicinity, including other supports and restraints, if any.

B. Qualification Data: For professional engineer and testing agency.

C. Welding certificates.

D. Air-Mounting System Performance Certification: Include natural frequency, load, and damping test data performed by an independent agency.

E. Field quality-control reports.

1.6 CLOSEOUT SUBMITTALS

A. Operation and Maintenance Data: For restrained-air-spring mounts to include in operation and maintenance manuals.

1.7 QUALITY ASSURANCE

A. Testing Agency Qualifications: An independent agency, with the experience and capability to conduct the testing indicated, that is an NRTL as defined by OSHA in 29 CFR 1910.7 and that is acceptable to authorities having jurisdiction.

B. Comply with seismic-restraint requirements in the IBC unless requirements in this Section are more stringent.

C. Welding Qualifications: Qualify procedures and personnel according to AWS D1.1/D1.1M, "Structural Welding Code - Steel."

D. Seismic-restraint devices shall have horizontal and vertical load testing and analysis and shall bear anchorage preapproval OPM number from OSHPD, or preapproval by another agency acceptable to authorities having jurisdiction, showing maximum seismic-restraint ratings. Ratings based on independent testing are preferred to ratings based on calculations. If preapproved ratings are unavailable, submittals based on independent testing are preferred. Calculations (including combining shear and tensile loads) to support seismic-restraint designs must be signed and sealed by a qualified professional engineer.

PART 2 - PRODUCTS

2.1 PERFORMANCE REQUIREMENTS

A. Seismic-Restraint Loading:
   1. Contractor shall consult on requirements with Structural Engineer of Record or other acceptable qualified engineer by the authority having jurisdiction.

2.2 ELASTOMERIC ISOLATION PADS

A. Elastomeric Isolation Pads.
   1. Manufacturer and Model:
      a. Basis of Design
         1) Mason Industries Type MBSW
      b. Or Approved Equal by:
         1) California Dynamics Corporation
         2) Kinetics Noise Control
         3) Vibrex
         4) Isotech Industries
   2. Fabrication: Single or multiple layers of sufficient durometer stiffness for uniform loading over pad area.
   3. Size: Factory or field cut to match requirements of supported equipment.
   4. Pad Material: Oil and water resistant with elastomeric properties.
   5. Surface Pattern: Waffle pattern.
   6. Load-bearing metal plates adhered to pads.
   7. Sandwich-Core Material: Resilient and elastomeric

2.3 ELASTOMERIC ISOLATION MOUNTS

A. Double-Deflection, Elastomeric Isolation Mounts.
   1. Manufacturer and Model:
      a. Basis of Design
         1) Mason Industries Type ND
      b. Or Approved Equal by:
         1) California Dynamics Corporation
         2) Kinetics Noise Control
         3) Vibrex

4) Isotech Industries

2. Mounting Plates:
   a. Top Plate: Encapsulated steel load transfer top plates, factory drilled and threaded with threaded studs or bolts.
   b. Baseplate: Encapsulated steel bottom plates with holes provided for anchoring to support structure.
3. Elastomeric Material: Molded, oil-resistant rubber, neoprene, or other elastomeric material.

2.4 RESTRAINED ELASTOMERIC ISOLATION MOUNTS

A. Restrained Elastomeric Isolation Mounts.
   1. Manufacturer and Model:
      a. Basis of Design
         1) Mason Industries Type BR
      b. Or Approved Equal by:
         1) California Dynamics Corporation
         2) Kinetics Noise Control
         3) Vibrex
         4) Isotech Industries
   2. Description: All-directional isolator with seismic restraints containing two separate and opposing elastomeric elements that prevent central threaded element and attachment hardware from contacting the housing during normal operation.
      a. Housing: Cast-ductile iron or welded steel.
      b. Elastomeric Material: Molded, oil-resistant rubber, neoprene, or other elastomeric material.

2.5 OPEN-SPRING ISOLATORS

A. Freestanding, Laterally Stable, Open-Spring Isolators.
   1. Manufacturer and Model:
      a. Basis of Design
         1) Mason Industries Type SLFH
      b. Or Approved Equal by:
         1) California Dynamics Corporation
         2) Kinetics Noise Control
         3) Vibrex
         4) Isotech Industries
   2. Outside Spring Diameter: Not less than 80 percent of the compressed height of the spring at rated load.
   3. Minimum Additional Travel: 50 percent of the required deflection at rated load.
   4. Lateral Stiffness: More than 80 percent of rated vertical stiffness.
   5. Overload Capacity: Support 200 percent of rated load, fully compressed, without deformation or failure.
   6. Baseplates: Factory-drilled steel plate for bolting to structure with an elastomeric isolator pad attached to the underside. Baseplates shall limit floor load to 500 psig.
   7. Top Plate and Adjustment Bolt: Threaded top plate with adjustment bolt and cap screw to fasten and level equipment.

2.6 HOUSED-SPRING ISOLATORS

A. Freestanding, Laterally Stable, Open-Spring Isolators in Two-Part Telescoping Housing.
   1. Manufacturer and Model:
      a. Basis of Design
         1) Mason Industries Type C
      b. Or Approved Equal by:
         1) California Dynamics Corporation
         2) Kinetics Noise Control
         3) Vibrex
         4) Isotech Industries
   2. Outside Spring Diameter: Not less than 80 percent of the compressed height of the spring at rated load.
   3. Minimum Additional Travel: 50 percent of the required deflection at rated load.
   4. Lateral Stiffness: More than 80 percent of rated vertical stiffness.
   5. Overload Capacity: Support 200 percent of rated load, fully compressed, without deformation or failure.
   6. Two-Part Telescoping Housing: A steel top and bottom frame separated by an elastomeric material and enclosing the spring isolators.
      a. Drilled base housing for bolting to structure with an elastomeric isolator pad attached to the underside. Bases shall limit floor load to 500 psig.
      b. Top housing with attachment and leveling bolt, threaded mounting holes and internal leveling device.

2.7 RESTRAINED-SPRING ISOLATORS

A. Freestanding, Laterally Stable, Open-Spring Isolators with Vertical-Limit Stop Restraint.
   1. Manufacturer and Model:
      a. Basis of Design
         1) Mason Industries Type SLR
      b. Or Approved Equal by:
         1) California Dynamics Corporation
         2) Kinetics Noise Control
         3) Vibrex
         4) Isotech Industries
   2. Housing: Steel housing with vertical-limit stops to prevent spring extension due to weight being removed.
      a. Base with holes for bolting to structure with an elastomeric isolator pad attached to the underside. Bases shall limit floor load to 500 psig.
      b. Top plate with threaded mounting holes and elastomeric pad.
      c. Internal leveling bolt that acts as blocking during installation.
   3. Restraint: Limit stop as required for equipment and authorities having jurisdiction.
   4. Outside Spring Diameter: Not less than 80 percent of the compressed height of the spring at rated load.
   5. Minimum Additional Travel: 50 percent of the required deflection at rated load.
   6. Lateral Stiffness: More than 80 percent of rated vertical stiffness.
   7. Overload Capacity: Support 200 percent of rated load, fully compressed, without deformation or failure.

2.8 HOUSED-RESTRAINED-SPRING ISOLATORS

A. Freestanding, Steel, Open-Spring Isolators with Vertical-Limit Stop Restraint in Two-Part Telescoping Housing.
   1. Manufacturer and Model:
      a. Basis of Design
         1) Mason Industries Type SSLFH
      b. Or Approved Equal by:
         1) California Dynamics Corporation
         2) Kinetics Noise Control
         3) Vibrex
         4) Isotech Industries
   2. Two-Part Telescoping Housing: A steel top and bottom frame separated by an elastomeric material and enclosing the spring isolators. Housings are equipped with adjustable snubbers to limit vertical movement.
      a. Drilled base housing for bolting to structure with an elastomeric isolator pad attached to the underside. Bases shall limit floor load to 500 psig.
      b. Threaded top housing with adjustment bolt and cap screw to fasten and level equipment.
   3. Outside Spring Diameter: Not less than 80 percent of the compressed height of the spring at rated load.
   4. Minimum Additional Travel: 50 percent of the required deflection at rated load.
   5. Lateral Stiffness: More than 80 percent of rated vertical stiffness.
   6. Overload Capacity: Support 200 percent of rated load, fully compressed, without deformation or failure.

2.9 PIPE-RISER RESILIENT SUPPORT

A. Description: All-directional, acoustical pipe anchor consisting of two steel tubes separated by a minimum 1/2-inch-thick neoprene.
   1. Manufacturer and Model:
      a. Basis of Design
         1) Mason Industries Type SSLFH
      b. Or Approved Equal by:
         1) California Dynamics Corporation
         2) Kinetics Noise Control
         3) Vibrex
         4) Isotech Industries
   2. Vertical-Limit Stops: Steel and neoprene vertical-limit stops arranged to prevent vertical travel in both directions.
   3. Maximum Load Per Support: 500 psig on isolation material providing equal isolation in all directions.

2.10 RESILIENT PIPE GUIDES

A. Description: Telescopic arrangement of two steel tubes or post and sleeve arrangement separated by a minimum 1/2-inch-thick neoprene.
   1. Manufacturer and Model:

a. Basis of Design
   1) Mason Industries Type ADA
b. Or Approved Equal by:
   1) California Dynamics Corporation
   2) Kinetics Noise Control
   3) Vibrex
   4) Isotech Industries

2. Factory-Set Height Guide with Shear Pin: Shear pin shall be removable and reinsertable to allow for selection of pipe movement. Guides shall be capable of motion to meet location requirements.

2.11 AIR-SPRING ISOLATORS

A. Freestanding, Single or Multiple, Compressed-Air Bellows.
1. Manufacturer and Model:
   a. Basis of Design
      1) Mason Industries Type MT
   b. Or Approved Equal by:
      1) California Dynamics Corporation
      2) Kinetics Noise Control
      3) Vibrex
      4) Isotech Industries
2. Bellows Assembly: Upper and lower powder-coated steel sections connected by a replaceable, flexible, nylon-reinforced neoprene bellows or similar elastomeric material.
3. Maximum Natural Frequency: 3 Hz.
4. Operating Pressure Range: 25 to 100 psig.
5. Burst Pressure: At least three times manufacturer's published maximum operating pressure.
6. Tank valves.

2.12 RESTRAINED-AIR-SPRING ISOLATORS

A. Freestanding, Single or Multiple, Compressed-Air Bellows with Vertical-Limit Stop Restraint.
1. Manufacturer and Model:
   a. Basis of Design
      1) Mason Industries Type SLR-MT
   b. Or Approved Equal by:
      1) California Dynamics Corporation
      2) Kinetics Noise Control
      3) Vibrex
      4) Isotech Industries
2. Housing: Steel housing with vertical-limit stops to prevent spring extension due to weight being removed.
   a. Base with holes for bolting to structure with an elastomeric isolator pad attached to the underside. Bases shall limit floor load to 500 psig.
   b. Top plate with threaded mounting holes elastomeric pad.
   c. Internal leveling bolt that acts as blocking during installation.
3. Restraint: Limit stop as required for equipment and authorities having jurisdiction.

4. Outside Spring Diameter: Not less than 80 percent of the compressed height of the spring at rated load.
5. Minimum Additional Travel: 50 percent of the required deflection at rated load.
6. Lateral Stiffness: More than 80 percent of rated vertical stiffness.
7. Overload Capacity: Support 200 percent of rated load, fully compressed, without deformation or failure.
8. Bellows Assembly: Upper and lower powder-coated steel sections connected by a replaceable, flexible, nylon-reinforced neoprene bellows or similar elastomeric material.
9. Maximum Natural Frequency: 3 Hz.
10. Operating Pressure Range: 25 to 100 psig.
11. Burst Pressure: At least three times manufacturer's published maximum operating pressure.
12. Tank valves.

2.13 ELASTOMERIC HANGERS

A. Elastomeric Mount in a Steel Frame with Upper and Lower Steel Hanger Rods.
   1. Manufacturer and Model:
      a. Basis of Design
         1) Mason Industries Type HD
      b. Or Approved Equal by:
         1) California Dynamics Corporation
         2) Kinetics Noise Control
         3) Vibrex
         4) Isotech Industries
   2. Frame: Steel, fabricated with a connection for an upper threaded hanger rod and an opening on the underside to allow for a maximum of 30 degrees of angular lower hanger-rod misalignment without binding or reducing isolation efficiency.
   3. Dampening Element: Molded, oil-resistant rubber, neoprene, or other elastomeric material with a projecting bushing for the underside opening preventing steel to steel contact.

2.14 SPRING HANGERS

A. Combination Coil-Spring and Elastomeric-Insert Hanger with Spring and Insert in Compression.
   1. Manufacturer and Model:
      a. Basis of Design
         1) Mason Industries Type 30N OR PC30NS
      b. Or Approved Equal by:
         1) California Dynamics Corporation
         2) Kinetics Noise Control
         3) Vibrex
         4) Isotech Industries
   2. Frame: Steel, fabricated for connection to threaded hanger rods and to allow for a maximum of 30 degrees of angular hanger-rod misalignment without binding or reducing isolation efficiency.
   3. Outside Spring Diameter: Not less than 80 percent of the compressed height of the spring at rated load.
   4. Minimum Additional Travel: 50 percent of the required deflection at rated load.
   5. Lateral Stiffness: More than 80 percent of rated vertical stiffness.

6. Overload Capacity: Support 200 percent of rated load, fully compressed, without deformation or failure.
7. Elastomeric Element: Molded, oil-resistant rubber or neoprene. Steel-washer-reinforced cup to support spring and bushing projecting through bottom of frame.
8. Adjustable Vertical Stop: Steel washer with neoprene washer "up-stop" on lower threaded rod.
9. Self-centering hanger-rod cap to ensure concentricity between hanger rod and support spring coil.

2.15 SNUBBERS

A. Manufacturer and Model:
   1. Basis of Design
      a. Mason Industries Type Z-1011
   2. Or Approved Equal by:
      a. California Dynamics Corporation
      b. Kinetics Noise Control
      c. Vibrex
      d. Isotech Industries

B. Description: Factory fabricated using welded structural-steel shapes and plates, anchor bolts, and replaceable resilient isolation washers and bushings.
   1. Anchor bolts for attaching to concrete shall be seismic-rated, drill-in, and stud-wedge or female-wedge type.
   2. Resilient Isolation Washers and Bushings: Oil- and water-resistant neoprene.
   3. Maximum 1/4-inch air gap, and minimum 1/4-inch-thick resilient cushion.

2.16 RESTRAINT CHANNEL BRACINGS

A. Manufacturer and Model:
   1. Basis of Design
      a. Mason Industries Type Seismic Sway Bracing System
   2. Or Approved Equal by:
      a. California Dynamics Corporation
      b. Kinetics Noise Control
      c. Vibrex
      d. Isotech Industries

B. Description: MFMA-4, shop- or field-fabricated bracing assembly made of slotted steel channels with accessories for attachment to braced component at one end and to building structure at the other end and other matching components and with corrosion-resistant coating; rated in tension, compression, and torsion forces.

2.17 RESTRAINT CABLES

A. Manufacturer and Model:
   1. Basis of Design

a. Mason Industries Type SCBA Assembly, SCR, UC & CCB
2. Or Approved Equal by:
a. California Dynamics Corporation
b. Kinetics Noise Control
c. Vibrex
d. Isotech Industries

B. Restraint Cables: ASTM A 603 galvanized ASTM A 492 stainless-steel cables. End connections made of steel assemblies with thimbles, brackets, swivel, and bolts designed for restraining cable service; with a minimum of two clamping bolts for cable engagement.

2.18 SEISMIC-RESTRAINT ACCESSORIES

A. Manufacturer and Model:
1. Basis of Design
a. Mason Industries Type SCR, UC & CCB
2. Or Approved Equal by:
a. California Dynamics Corporation
b. Kinetics Noise Control
c. Vibrex
d. Isotech Industries

B. Hanger-Rod Stiffener: Reinforcing steel angle clamped to hanger rod.

C. Hinged and Swivel Brace Attachments: Multifunctional steel connectors for attaching hangers to rigid channel bracings and restraint cables.

D. Bushings for Floor-Mounted Equipment Anchor Bolts: Neoprene bushings designed for rigid equipment mountings, and matched to type and size of anchor bolts and studs.

E. Bushing Assemblies for Wall-Mounted Equipment Anchorage: Assemblies of neoprene elements and steel sleeves designed for rigid equipment mountings, and matched to type and size of attachment devices used.

F. Resilient Isolation Washers and Bushings: One-piece, molded, oil- and water-resistant neoprene, with a flat washer face.

2.19 MECHANICAL ANCHOR BOLTS

A. Manufacturer and Model:
1. Basis of Design
a. Mason Industries Type SAB/SAS
2. Or Approved Equal by:
a. California Dynamics Corporation
b. Kinetics Noise Control
c. Hilti

B. Mechanical Anchor Bolts: Drilled-in and stud-wedge or female-wedge type in zinc-coated steel for interior applications and stainless steel for exterior applications. Select anchor bolts with strength required for anchor and as tested according to ASTM E 488.

2.20 ADHESIVE ANCHOR BOLTS

A. Manufacturer and Model:
   1. Basis of Design
      a. Mason Industries Type SAA
   2. Or Approved Equal by:
      a. California Dynamics Corporation
      b. Kinetics Noise Control
      c. Hilti

B. Adhesive Anchor Bolts: Drilled-in and capsule anchor system containing PVC or urethane methacrylate-based resin and accelerator, or injected polymer or hybrid mortar adhesive. Provide anchor bolts and hardware with zinc-coated steel for interior applications and stainless steel for exterior applications. Select anchor bolts with strength required for anchor and as tested according to ASTM E 488.

2.21 VIBRATION ISOLATION EQUIPMENT BASES

A. Steel Rails: Factory-fabricated, welded, structural-steel rails.
   1. Manufacturer and Model:
      a. Basis of Design
         1) Mason Industries Type RND Rails
      b. Or Approved Equal by:
         1) California Dynamics Corporation
         2) Kinetics Noise Control
         3) Vibrex
         4) Isotech Industries
   2. Design Requirements: Lowest possible mounting height with not less than 1-inch clearance above the floor. Include equipment anchor bolts and auxiliary motor slide rails.
      a. Include supports for suction and discharge elbows for pumps.
   3. Structural Steel: Steel shapes, plates, and bars complying with ASTM A 36/A 36M. Rails shall have shape to accommodate supported equipment.
   4. Support Brackets: Factory-welded steel brackets on frame for outrigger isolation mountings and to provide for anchor bolts and equipment support.

B. Steel Bases: Factory-fabricated, welded, structural-steel bases and rails.
   1. Manufacturer and Model:
      a. Basis of Design
         1) Mason Industries Type MSL
      b. Or Approved Equal by:
         1) California Dynamics Corporation
         2) Kinetics Noise Control
         3) Vibrex

4) Isotech Industries

2. Design Requirements: Lowest possible mounting height with not less than 1-inch clearance above the floor. Include equipment anchor bolts and auxiliary motor slide bases or rails.
   a. Include supports for suction and discharge elbows for pumps.
3. Structural Steel: Steel shapes, plates, and bars complying with ASTM A 36/A 36M. Bases shall have shape to accommodate supported equipment.
4. Support Brackets: Factory-welded steel brackets on frame for outrigger isolation mountings and to provide for anchor bolts and equipment support.

C. Concrete Inertia Base: Factory-fabricated], welded, structural-steel bases and rails ready for placement of cast-in-place concrete.
   1. Manufacturer and Model:
      a. Basis of Design
         1) Mason Industries Type BMK
      b. Or Approved Equal by:
         1) California Dynamics Corporation
         2) Kinetics Noise Control
         3) Vibrex
         4) Isotech Industries
   2. Design Requirements: Lowest possible mounting height with not less than 1-inch clearance above the floor. Include equipment anchor bolts and auxiliary motor slide bases or rails.
      a. Include supports for suction and discharge elbows for pumps.
   3. Structural Steel: Steel shapes, plates, and bars complying with ASTM A 36/A 36M. Bases shall have shape to accommodate supported equipment.
   4. Support Brackets: Factory-welded steel brackets on frame for outrigger isolation mountings and to provide for anchor bolts and equipment support.
   5. Fabrication: Fabricate steel templates to hold equipment anchor-bolt sleeves and anchors in place during placement of concrete. Obtain anchor-bolt templates from supported equipment manufacturer.

2.22 RESTRAINED SEISMICALLY ISOLATION ROOF-CURB RAILS

A. Manufacturer:
   1. Basis of Design
      a. Mason Industries
   2. Or Approved Equal by:
      a. California Dynamics Corporation
      b. Kinetics Noise Control
      c. Vibrex
      d. Isotech Industries

B. Description: Factory-assembled, fully enclosed, insulated, air- and watertight curb rail designed to resiliently support equipment and to withstand seismic forces.

C. Upper Frame: The upper frame shall provide continuous support for equipment and shall be captive to resiliently resist seismic forces.

D. Lower Support Assembly: The lower support assembly shall be formed sheet metal section containing adjustable and removable steel springs that support the upper frame. The lower support assembly shall have a means for attaching to building structure and a wood nailer for attaching roof materials, and shall be insulated with a minimum of 2 inches of rigid, glass-fiber insulation on inside of assembly. Adjustable, restrained-spring isolators shall be mounted on elastomeric vibration isolation pads and shall have access ports, for level adjustment, with removable waterproof covers at all isolator locations. Isolators shall be located so they are accessible for adjustment at any time during the life of the installation without interfering with the integrity of the roof.

E. Snubber Bushings: All-directional, elastomeric snubber bushings at least 1/4 inch thick.

F. Water Seal: Galvanized sheet metal with EPDM seals at corners, attached to upper support frame, extending down past wood nailer of lower support assembly, and counterflashed over roof materials.

PART 3 - EXECUTION

3.1 EXAMINATION

A. Examine areas and equipment to receive vibration isolation and seismic-control devices for compliance with requirements for installation tolerances and other conditions affecting performance of the Work.

B. Examine roughing-in of reinforcement and cast-in-place anchors to verify actual locations before installation.

C. Proceed with installation only after unsatisfactory conditions have been corrected.

3.2 APPLICATIONS

A. Multiple Pipe Supports: Secure pipes to trapeze member with clamps approved for application by an agency acceptable to authorities having jurisdiction.

B. Hanger-Rod Stiffeners: Install hanger-rod stiffeners where indicated or scheduled on Drawings to receive them and where required to prevent buckling of hanger rods due to seismic forces.

C. Strength of Support and Seismic-Restraint Assemblies: Where not indicated, select sizes of components so strength is adequate to carry present and future static and seismic loads within specified loading limits.

3.3 VIBRATION CONTROL AND SEISMIC-RESTRAINT DEVICE INSTALLATION

A. Coordinate the location of embedded connection hardware with supported equipment attachment and mounting points and with requirements for concrete reinforcement and formwork as required.]

B. Installation of vibration isolators must not cause any change of position of equipment, piping, or ductwork resulting in stresses or misalignment.

C. Comply with requirements in Section 077200 "Roof Accessories" for installation of roof curbs, equipment supports, and roof penetrations.

D. Equipment Restraints:
   1. Install seismic snubbers on HVAC equipment mounted on vibration isolators. Locate snubbers as close as possible to vibration isolators and bolt to equipment base and supporting structure.
   2. Install resilient bolt isolation washers on equipment anchor bolts where clearance between anchor and adjacent surface exceeds 0.125 inch.
   3. Install seismic-restraint devices using methods approved by an agency acceptable to authorities having jurisdiction that provides required submittals for component.

E. Piping Restraints:
   1. Comply with requirements in MSS SP-127.
   2. Space lateral supports a maximum of 40 feet o.c., and longitudinal supports a maximum of 80 feet o.c.
   3. Brace a change of direction longer than 12 feet.

F. Install cables so they do not bend across edges of adjacent equipment or building structure.

G. Install seismic-restraint devices using methods approved by an agency acceptable to authorities having jurisdiction that provides required submittals for component.

H. Install bushing assemblies for anchor bolts for floor-mounted equipment, arranged to provide resilient media between anchor bolt and mounting hole in concrete base.

I. Install bushing assemblies for mounting bolts for wall-mounted equipment, arranged to provide resilient media where equipment or equipment-mounting channels are attached to wall.

J. Attachment to Structure: If specific attachment is not indicated, anchor bracing to structure at flanges of beams, at upper truss chords of bar joists, or at concrete members.

K. Drilled-in Anchors:
   1. Identify position of reinforcing steel and other embedded items prior to drilling holes for anchors. Do not damage existing reinforcing or embedded items during coring or drilling. Notify the structural engineer if reinforcing steel or other embedded items are encountered during drilling. Locate and avoid prestressed tendons, electrical and telecommunications conduit, and gas lines.
   2. Do not drill holes in concrete or masonry until concrete, mortar, or grout has achieved full design strength.
   3. Wedge Anchors: Protect threads from damage during anchor installation. Heavy-duty sleeve anchors shall be installed with sleeve fully engaged in the structural element to which anchor is to be fastened.
   4. Adhesive Anchors: Clean holes to remove loose material and drilling dust prior to installation of adhesive. Place adhesive in holes proceeding from the bottom of the hole and progressing toward the surface in such a manner as to avoid introduction of air pockets in the adhesive.

5. Set anchors to manufacturer's recommended torque, using a torque wrench.
6. Install zinc-coated steel anchors for interior and stainless-steel anchors for exterior applications.

3.4 ACCOMMODATION OF DIFFERENTIAL SEISMIC MOTION

A. Install flexible connections in piping where they cross seismic joints, where adjacent sections or branches are supported by different structural elements, and where the connections terminate with connection to equipment that is anchored to a different structural element from the one supporting the connections as they approach equipment. Comply with requirements in Section 232113 "Hydronic Piping" for piping flexible connections.

3.5 FIELD QUALITY CONTROL

A. Testing Agency: Engage a qualified testing agency to perform tests and inspections.

B. Perform tests and inspections.

C. Tests and Inspections:
1. Provide evidence of recent calibration of test equipment by a testing agency acceptable to authorities having jurisdiction.
2. Schedule test with Owner, through Architect, before connecting anchorage device to restrained component (unless post connection testing has been approved), and with at least seven days' advance notice.
3. Obtain Architect's approval before transmitting test loads to structure. Provide temporary load-spreading members.
4. Test at least four of each type and size of installed anchors and fasteners selected by Structural Engineer of Record.
5. Test to 90 percent of rated proof load of device.
6. Measure isolator restraint clearance.
7. Measure isolator deflection.
8. Verify snubber minimum clearances.
9. Test and adjust restrained-air-spring isolator controls and safeties.

D. Remove and replace malfunctioning units and retest as specified above.

E. Prepare test and inspection reports.

3.6 ADJUSTING

A. Adjust isolators after piping system is at operating weight.

B. Adjust limit stops on restrained-spring isolators to mount equipment at normal operating height. After equipment installation is complete, adjust limit stops so they are out of contact during normal operation.

3.7 AIR-SPRING ISOLATOR INSTALLATION

A. Independent Isolator Installation:
   1. Install tank valve into each air isolator.
   2. Inflate each isolator to height and pressure specified on Drawings.

B. Pressure-Regulated Isolator Installation:
   1. Coordinate the constant pressure-regulated air supply to air springs with the requirements for piping and connections specified in Section 221513 "General-Service Compressed-Air Piping."
   2. Connect all pressure regulators to a single dry, filtered facility compressed air supply.
   3. Inflate isolators to height and or pressure specified on Drawings.

3.8 VIBRATION ISOLATION EQUIPMENT BASES INSTALLATION

A. Coordinate the location of embedded connection hardware with supported equipment attachment and mounting points and with requirements for concrete reinforcement and formwork specified as required.

END OF SECTION 230548

SECTION 230553 - IDENTIFICATION FOR HVAC PIPING AND EQUIPMENT

PART 1 - GENERAL

1.1 RELATED DOCUMENTS

A. Drawings and general provisions of the Contract, including General and Supplementary Conditions and Division 01 Specification Sections, apply to this Section.

1.2 SUMMARY

A. Section Includes:
1. Equipment labels.
2. Warning signs and labels.
3. Pipe labels.
4. Duct labels.
5. Stencils.
6. Valve tags.
7. Warning tags.

1.3 ACTION SUBMITTALS

A. Submittals shall be formatted per Section 230000 “General Mechanical Requirements”. The manufacturer shall resubmit the specification section showing compliance with each respective paragraphs and specified items and features in that particular specification section. All **exceptions** shall be clearly identified by referencing respective paragraph and other requirements. Next to each specification item, indicate the following:
1. “No Exception Taken”.
2. “Exception”. All exceptions shall be clearly identified by referencing respective paragraph and other requirements along with proposed alternative.

B. Product Data: For each type of product.

C. Samples: For color, letter style, and graphic representation required for each identification material and device.

D. Equipment Label Schedule: Include a listing of all equipment to be labeled with the proposed content for each label.

E. Valve Schedules: For each piping system to include in maintenance manuals.

1.4 COORDINATION

A. Coordinate installation of identifying devices with completion of covering and painting of surfaces where devices are to be applied.

B. Coordinate installation of identifying devices with locations of access panels and doors.

C. Install identifying devices before installing acoustical ceilings and similar concealment.

PART 2 - PRODUCTS

2.1 GENERAL

A. Manufacturers:
1. Craftmark Identification Systems
2. Seton Identification Products
3. MSI Marking Services
4. Setmark

2.2 EQUIPMENT LABELS

A. Metal Labels for Equipment:
1. Material and Thickness: Brass or anodized aluminum, 0.032-inch minimum thickness and having predrilled or stamped holes for attachment hardware.
2. Minimum Label Size: Length and width vary for required label content, but not less than 2-1/2 by 3/4 inch.
3. Minimum Letter Size: 1/4 inch for name of units if viewing distance is less than 24 inches, 1/2 inch for viewing distances up to 72 inches, and proportionately larger lettering for greater viewing distances. Include secondary lettering two-thirds to three-fourths the size of principal lettering.
4. Fasteners: Stainless-steel rivets or contact-type permanent adhesive, compatible with label and substrate.
5. Adhesive: Contact-type permanent adhesive, compatible with label and with substrate.

B. Plastic Labels for Equipment:
1. Material and Thickness: Three-layer, multicolor, plastic labels for mechanical engraving, 1/16 inch thick and having predrilled holes for attachment hardware.
2. Color Coding:

   Letter Color: White.
   Background Color: Red.
3. Maximum Temperature: Able to withstand temperatures up to 160 deg F.
4. Minimum Label Size: Length and width vary for required label content, but not less than 2-1/2 by 3/4 inch.
5. Minimum Letter Size: 1/4 inch for name of units if viewing distance is less than 24 inches, 1/2 inch for viewing distances up to 72 inches, and proportionately larger lettering for greater viewing distances. Include secondary lettering two-thirds to three-fourths the size of principal lettering.
6. Fasteners: Stainless-steel rivets or contact-type permanent adhesive, compatible with label and substrate.

C. Label Content: Include equipment's Drawing designation or unique equipment number.

2.3 WARNING SIGNS AND LABELS

A. Material and Thickness: Multilayer, multicolor, plastic labels for mechanical engraving, 1/8 inch thick, and having predrilled holes for attachment hardware.

B. Color Coding:
   1. Background Color: Yellow.
   2. Letter Color: Black.

C. Maximum Temperature: Able to withstand temperatures up to 160 deg F.

D. Minimum Label Size: Length and width vary for required label content, but not less than 2-1/2 by 3/4 inch.

E. Minimum Letter Size: 1/4 inch for name of units if viewing distance is less than 24 inches, 1/2 inch for viewing distances up to 72 inches, and proportionately larger lettering for greater viewing distances. Include secondary lettering two-thirds to three-fourths the size of principal lettering.

F. Fasteners: Stainless-steel rivets or self-tapping screws.

G. Adhesive: Contact-type permanent adhesive, compatible with label and with substrate.

H. Label Content: Include caution and warning information, plus emergency notification instructions.

2.4 PIPE LABELS

A. Do not use pipe labels or plastic tapes for bare pipes conveying fluids at temperatures of 125 deg F (52 deg C) or higher.

B. General Requirements for Manufactured Pipe Labels: Preprinted, color-coded, with lettering indicating service, and showing flow direction.

C. Pre-tensioned Pipe Labels for Outside Diameter Less or Equal to 8 Inches: Pre-coiled, semi-rigid plastic formed to cover full circumference of pipe and to attach to pipe without fasteners or adhesive.

D. Self-Adhesive Pipe Labels for Outside Diameter Greater than 8 Inches: Printed plastic with contact-type, permanent-adhesive backing. Either marker shall show accepted color-coded background, proper color of legend in relation to background color, accepted legend letter size, accepted marker length.

E. Pipe Label Contents: Include identification of piping service using same designations or abbreviations as used on Drawings, and an arrow indicating flow direction.
   1. Flow-Direction Arrows: Integral with piping system service lettering to accommodate both directions, or as separate unit on each pipe label to indicate flow direction.
   2. Lettering Size: At least 1-1/2 inches high.

2.5 DUCT LABELS

A. Material and Thickness: Multilayer, multicolor, plastic labels for mechanical engraving, 1/8 inch thick, and having predrilled holes for attachment hardware.

B. Maximum Temperature: Able to withstand temperatures up to 160 deg F.

C. Minimum Label Size: Length and width vary for required label content, but not less than 2-1/2 by 3/4 inch.

D. Minimum Letter Size: 1/4 inch for name of units if viewing distance is less than 24 inches, 1/2 inch for viewing distances up to 72 inches, and proportionately larger lettering for greater viewing distances. Include secondary lettering two-thirds to three-fourths the size of principal lettering.

E. Adhesive: Contact-type permanent adhesive, compatible with label and with substrate.

F. Duct Label Contents: Include identification of duct service using same designations or abbreviations as used on Drawings, and an arrow indicating flow direction.
   1. Flow-Direction Arrows: Integral with duct system service lettering to accommodate both directions, or as separate unit on each duct label to indicate flow direction.
   2. Lettering Size: At least 1-1/2 inches high.

2.6 STENCILS

A. Stencils for Piping: Prepared with letter sizes according to ASME A13.1 for piping; minimum letter height of 1-1/4 inches for ducts; and minimum letter height of ¾ inch for access panel and door labels, equipment labels and similar operational instructions.
   1. Stencil Material: Brass
   2. Stencil Paint: Exterior, gloss, alkyd enamel, black unless otherwise indicated. Pain may be in pressurized spray-can form.
   3. Identification Paint: Exterior, alkyd enamel in colors according to ASME A13.1 unless otherwise indicated.

B. Stencils for Ducts:
   1. Lettering Size: Minimum letter height of 1-1/4 inches for viewing distances up to 15 feet and proportionately larger lettering for greater viewing distances.
   2. Stencil Material: Brass.
   3. Stencil Paint: Exterior, gloss, acrylic enamel. Paint may be in pressurized spray-can form.
   4. Identification Paint: Exterior, acrylic enamel. Paint may be in pressurized spray-can form.

C. Stencils for Access Panels and Door Labels, Equipment Labels, and Similar Operational Instructions:
   1. Lettering Size: Minimum letter height of 1/2 inch for viewing distances up to 72 inches and proportionately larger lettering for greater viewing distances.
   2. Stencil Material**:** Brass
   3. Stencil Paint: Exterior, gloss, acrylic enamel. Paint may be in pressurized spray-can form.
   4. Identification Paint: Exterior, acrylic enamel. Paint may be in pressurized spray-can form.

2.7 VALVE TAGS

A. Valve Tags: Stamped or engraved with ¼-inch letters for piping system abbreviation and ½ inch sequenced numbers.
   1. Tag Material: Brass, 0.032-inch minimum thickness and having predrilled or stamped holes for attachment hardware.
   2. Fasteners: Brass wire-link or beaded chain; or S-hook.

B. Valve Schedules: For each piping system, on 8-1/2 by 11 inch bond paper. Tabulate valve number, piping system, system abbreviation (as shown on valve tag), location of valve (room or space), normal-operating position (open, closed or modulating), and variations for identification. Mark valves for emergency shutoff and similar special uses.
   1. Valve tag schedule shall be included in operation and maintenance data.

2.8 WARNING TAGS

A. Warning Tags: Preprinted or partially preprinted, accident-prevention tags, of plasticized card stock with matte finish suitable for writing.
   1. Size: Approximately 4 by 7 inches.
   2. Fasteners: Brass grommet and wire.
   3. Nomenclature: Large-size primary caption such as “DANGER”, “CAUTION” or “DO NOT OPERATE.”
   4. Color:
      a. Background Color: Yellow.
      b. Letter Color: Black.

PART 3 - EXECUTION

3.1 PREPARATION

A. Clean piping and equipment surfaces of substances that could impair bond of identification devices, including dirt, oil, grease, release agents, and incompatible primers, paints, and encapsulants.

3.2 GENERAL INSTALLATION REQUIREMENTS

A. Coordinate installation of identifying devices with completion of covering and painting of surfaces where devices are to be applied.

B. Coordinate installation of identifying devices with locations of access panels and doors.

C. Install identifying devices before installing acoustical ceilings and similar concealment.

3.3 EQUIPMENT LABEL INSTALLATION

A. Install or permanently fasten labels on each major item of mechanical equipment.

B. Locate equipment labels where accessible and visible.

3.4 PIPE LABEL INSTALLATION

A. Piping Color-Coding: Painting of piping is specified in Section 099123 "Interior Painting"

B. Locate pipe labels where piping is exposed or above accessible ceilings in finished spaces; machine rooms; accessible maintenance spaces such as shafts, tunnels, and plenums; and exterior exposed locations as follows:
   1. Within one foot of each valve and control device.
   2. Near each branch connection and riser takeoff.
   3. Near penetrations through walls, floors, ceilings, and inaccessible enclosures.
   4. Near major equipment items and other points of origination and termination.
   5. At access doors, manholes, and similar access points that permit view of concealed piping.
   6. Spaced at maximum intervals of 20 feet along each run, but not less than once in each room at entrance and exit of each concealed space.
   7. On piping above removable acoustical ceilings.

C. Directional Flow Arrows: Arrows shall be used to indicate direction of flow in pipes, including pipes where flow is allowed in both directions.

D. Pipe Label Color Schedule:
   1. Chilled-Water Piping:
      a. Background Color: Green.
      b. Letter Color: White.
   2. Heating Water Piping:
      a. Background Color: Yellow.
      b. Letter Color: Black.
   3. Steam Piping:
      a. Background Color: White.
      b. Letter Color: Black.
   4. Condenser-Water Piping:
      a. Background Color: Green.
      b. Letter Color: White.
   5. Refrigerant Piping:
      a. Background Color: Yellow.
      b. Letter Color: Black.
   6. Low-Pressure Steam Piping:
      a. Background Color: White.
      b. Letter Color: Black.
   7. High-Pressure Steam Piping:
      a. Background Color: White.
      b. Letter Color: Black.
   8. Steam Condensate Piping:
      a. Background Color: Purple.

b. Letter Color: White.

3.5 DUCT LABEL INSTALLATION

A. Locate ductwork labels where ductwork is exposed or above accessible ceilings in finished spaces; machine rooms; accessible maintenance spaces such as shafts, tunnels, and plenums; and exterior exposed locations as follows:
1. Within one foot of each control device.
2. Near each branch connection and riser takeoff.
3. Near penetrations through walls, floors, ceilings, and inaccessible enclosures.
4. Near major equipment items and other points of origination and termination.
5. Spaced at maximum intervals of 20 feet along each run, but not less than once in each room at entrance and exit of each concealed space.
6. On ductwork above removable acoustical ceilings.

B. Install plastic-laminated duct labels with permanent adhesive on air ducts in the following color codes:
1. Exhaust Air Ducts:
   a. Background Color: Yellow.
   b. Letter Color: Black.
2. Supply Air, Return Air and Outside Air:
   a. Background Color: Blue.
   b. Letter Color: White
3. Return Air and Outside Air:
   a. Background Color: Green.
   b. Letter Color: White
4. ASME A13.1 Colors and Designs: For hazardous material exhaust.

3.6 VALVE-TAG INSTALLATION

A. Install tags on valves and control devices in piping systems, except valves within factory-fabricated equipment units; faucets; convenience and lawn-watering hose connections. List tagged valves in a valve schedule.

B. Valve-Tag Application Schedule: Tag valves according to size, shape, and color scheme and with captions similar to those indicated in the following subparagraphs:
1. Valve-Tag Size and Shape:
   a. Chilled Water: 2 inches, round.
   b. Condenser Water: 2 inches, round.
   c. Hot Water: 2 inches, round.
   d. Refrigerant: 2 inches, round.
   e. Gas: 2 inches, round.
   f. Steam: 2 inches, round.
2. Valve-Tag Color:
   a. Chilled Water: Natural.
   b. Condenser Water: Natural.
   c. Hot Water: Natural.
   d. Refrigerant: Natural.

e. Gas: Natural.
f. Steam: Natural.

3. Letter Color:
   a. Chilled Water: Black.
   b. Condenser Water: Black.
   c. Hot Water: Black.
   d. Refrigerant: Black.
   e. Gas: Black.
   f. Steam: Black.

C. All above and below grade and interior and exterior valves shall be tagged. Submit valve tag chart to the Owner Representative for review and approval at the completion of the project.

3.7 WARNING-TAG INSTALLATION

A. Write required message on, and attach warning tags to, equipment and other items where required.

END OF SECTION 230553

SECTION 230593 - TESTING, ADJUSTING, AND BALANCING FOR HVAC

PART 1 - GENERAL

1.1 RELATED DOCUMENTS

A. Drawings and general provisions of the Contract, including General and Supplementary Conditions and Division 01 Specification Sections, apply to this Section.

1.2 SUMMARY

A. Section Includes:
   1. Balancing Air Systems:
      a. Constant-volume air systems.
      b. Variable-air-volume systems.
   2. Balancing Hydronic Piping Systems:
      a. Constant-flow hydronic systems.
   3. Testing, Adjusting, and Balancing Equipment:
      a. Motors.
      b. Condensing units.
      c. Heat-transfer coils.
   4. Testing, adjusting, and balancing existing systems and equipment.
   5. Sound tests.
   6. Vibration tests.
   7. Duct leakage tests.
   8. Control system verification.

1.3 DEFINITIONS

A. AABC: Associated Air Balance Council.

B. BAS: Building automation systems.

C. NEBB: National Environmental Balancing Bureau.

D. TAB: Testing, adjusting, and balancing.

E. TABB: Testing, Adjusting, and Balancing Bureau.

F. TAB Specialist: An independent entity meeting qualifications to perform TAB work.

G. TDH: Total dynamic head.

1.4 PREINSTALLATION MEETINGS

A. TAB Conference: Conduct a TAB conference at Project site with the Engineer and Commissioning Agent after approval of the TAB strategies and procedures plan to develop a mutual understanding of the details. Provide a minimum of 14 days' advance notice of scheduled meeting time and location.
   1. Minimum Agenda Items:
      a. The Contract Documents examination report.
      b. The TAB plan.
      c. Needs for coordination and cooperation of trades and subcontractors.
      d. Proposed procedures for documentation and communication flow.

1.5 ACTION SUBMITTALS

A. Submittals shall be formatted per Section 230000 “General Mechanical Requirements”. The manufacturer shall resubmit the specification section showing compliance with each respective paragraphs and specified items and features in that particular specification section. All **exceptions** shall be clearly identified by referencing respective paragraph and other requirements. Next to each specification item, indicate the following:
   1. “No Exception Taken”.
   2. “Exception”. All exceptions shall be clearly identified by referencing respective paragraph and other requirements along with proposed alternative.

B. TAB Report:
   1. Air-Balance Report for Prerequisite IEQ 1: Documentation indicating that work complies with ASHRAE 62.1, Section 7.2.2 - "Air Balancing."
   2. TAB Report for Prerequisite EA 2: Documentation indicating that work complies with ASHRAE/IESNA 90.1, Section 6.7.2.3 - "System Balancing."

1.6 INFORMATIONAL SUBMITTALS

A. Qualification Data: Submit documentation that the TAB specialist and this Project's TAB team members meet the qualifications specified in "Quality Assurance" Article.

B. Contract Documents Examination Report: Submit the Contract Documents review report as specified in Part 3.

C. Strategies and Procedures Plan: Submit TAB strategies and step-by-step procedures as specified in "Preparation" Article.

D. System Readiness Checklists: Submit system readiness checklists as specified in "Preparation" Article.

E. Examination Report: Submit a summary report of the examination review required in "Examination" Article.

F. Certified TAB reports.

G. Sample report forms.

H. Instrument calibration reports, to include the following:
   1. Instrument type and make.
   2. Serial number.
   3. Application.
   4. Dates of use.
   5. Dates of calibration.

1.7 QUALITY ASSURANCE

A. TAB Specialists Qualifications: Engage an independent TAB Contractor certified by AABC, NEBB or TABB.
   1. TAB Field Supervisor: Employee of the TAB specialist and certified by AABC, NEBB or TABB.
   2. TAB Technician: Employee of the TAB specialist and certified by AABC, NEBB or TABB as a TAB technician.

B. Instrumentation Type, Quantity, Accuracy, and Calibration: Comply with requirements in ASHRAE 111, Section 4, "Instrumentation."

C. ASHRAE Compliance: Applicable requirements in ASHRAE 62.1, Section 7.2.2 - "Air Balancing."

D. ASHRAE/IESNA Compliance: Applicable requirements in ASHRAE/IESNA 90.1, Section 6.7.2.3 - "System Balancing."

1.8 FIELD CONDITIONS

A. Full Owner Occupancy: Owner will occupy the site and existing building during entire TAB period. Cooperate with Owner during TAB operations to minimize conflicts with Owner's operations.

B. Partial Owner Occupancy: Owner may occupy completed areas of building before Substantial Completion. Cooperate with Owner during TAB operations to minimize conflicts with Owner's operations.

PART 2 - PRODUCTS (Not Applicable)

PART 3 - EXECUTION

3.1 EXAMINATION

A. Examine the Contract Documents to become familiar with Project requirements and to discover conditions in systems designs that may preclude proper TAB of systems and equipment.

B. Examine installed systems for balancing devices, such as test ports, gage cocks, thermometer wells, flow-control devices, balancing valves and fittings, and manual volume dampers. Verify that locations of these balancing devices are applicable for intended purpose and are accessible.

C. Examine the approved submittals for HVAC systems and equipment.

D. Examine design data including HVAC system descriptions, statements of design assumptions for environmental conditions and systems output, and statements of philosophies and assumptions about HVAC system and equipment controls.

E. Examine ceiling plenums and underfloor air plenums used for supply, return, or relief air to verify that they are properly separated from adjacent areas. Verify that penetrations in plenum walls are sealed and fire-stopped if required.

F. Examine equipment performance data including fan and pump curves.
   1. Relate performance data to Project conditions and requirements, including system effects that can create undesired or unpredicted conditions that cause reduced capacities in all or part of a system.
   2. Calculate system-effect factors to reduce performance ratings of HVAC equipment when installed under conditions different from the conditions used to rate equipment performance. To calculate system effects for air systems, use tables and charts found in AMCA 201, "Fans and Systems," or in SMACNA's "HVAC Systems - Duct Design." Compare results with the design data and installed conditions.

G. Examine system and equipment installations and verify that field quality-control testing, cleaning, and adjusting specified in individual Sections have been performed.

H. Examine test reports specified in individual system and equipment Sections.

I. Examine HVAC equipment and verify that bearings are greased, belts are aligned and tight, filters are clean, and equipment with functioning controls is ready for operation.

J. Examine terminal units, such as variable-air-volume boxes, and verify that they are accessible and their controls are connected and functioning.

K. Examine heat-transfer coils for correct piping connections and for clean and straight fins.

L. Examine operating safety interlocks and controls on HVAC equipment.

M. Report deficiencies discovered before and during performance of TAB procedures. Observe and record system reactions to changes in conditions. Record default set points if different from indicated values.

3.2 PREPARATION

A. Prepare a TAB plan that includes the following:
   1. Equipment and systems to be tested.
   2. Strategies and step-by-step procedures for balancing the systems.
   3. Instrumentation to be used.

4. Sample forms with specific identification for all equipment.

B. Perform system-readiness checks of HVAC systems and equipment to verify system readiness for TAB work. Include, at a minimum, the following:
   1. Airside:
      a. Verify that leakage and pressure tests on air distribution systems have been satisfactorily completed.
      b. Duct systems are complete with terminals installed.
      c. Volume, smoke, and fire dampers are open and functional.
      d. Clean filters are installed.
      e. Fans are operating, free of vibration, and rotating in correct direction.
      f. Variable-frequency controllers' startup is complete and safeties are verified.
      g. Automatic temperature-control systems are operational.
      h. Ceilings are installed.
      i. Windows and doors are installed.
      j. Suitable access to balancing devices and equipment is provided.

3.3 GENERAL PROCEDURES FOR TESTING AND BALANCING

A. Perform testing and balancing procedures on each system according to the procedures contained in ASHRAE Standard 111 or SMACNA's "HVAC Systems - Testing, Adjusting, and Balancing" and in this Section.

B. Cut insulation, ducts, pipes, and equipment cabinets for installation of test probes to the minimum extent necessary for TAB procedures.
   1. After testing and balancing, install test ports and duct access doors that comply with requirements in Section 233300 "Air Duct Accessories."
   2. Install and join new insulation that matches removed materials. Restore insulation, coverings, vapor barrier, and finish according to Section 230713 "Duct Insulation," Section 230716 "HVAC Equipment Insulation," and Section 230719 "HVAC Piping Insulation."

C. Mark equipment and balancing devices, including damper-control positions, valve position indicators, fan-speed-control levers, and similar controls and devices, with paint or other suitable, permanent identification material to show final settings.

D. Take and report testing and balancing measurements in inch-pound (IP) units.

3.4 GENERAL PROCEDURES FOR BALANCING AIR SYSTEMS

A. Prepare test reports for both fans and outlets. Obtain manufacturer's outlet factors and recommended testing procedures. Cross-check the summation of required outlet volumes with required fan volumes.

B. Prepare schematic diagrams of systems' "as-built" duct layouts.

C. For variable-air-volume systems, develop a plan to simulate diversity.

D. Determine the best locations in main and branch ducts for accurate duct-airflow measurements.

E. Check airflow patterns from the outdoor-air louvers and dampers and the return- and exhaust-air dampers through the supply-fan discharge and mixing dampers.

F. Locate start-stop and disconnect switches, electrical interlocks, and motor starters.

G. Verify that motor starters are equipped with properly sized thermal protection.

H. Check dampers for proper position to achieve desired airflow path.

I. Check for airflow blockages.

J. Check condensate drains for proper connections and functioning.

K. Check for proper sealing of air-handling-unit components.

L. Verify that air duct system is sealed as specified in Section 233113 "Metal Ducts."

3.5 PROCEDURES FOR CONSTANT-VOLUME AIR SYSTEMS

A. Adjust fans to deliver total indicated airflows within the maximum allowable fan speed listed by fan manufacturer.
   1. Measure total airflow.
      a. Set outside-air, return-air, and relief-air dampers for proper position that simulates minimum outdoor-air conditions.
      b. Where duct conditions allow, measure airflow by Pitot-tube traverse. If necessary, perform multiple Pitot-tube traverses to obtain total airflow.
      c. Where duct conditions are not suitable for Pitot-tube traverse measurements, a coil traverse may be acceptable.
      d. If a reliable Pitot-tube traverse or coil traverse is not possible, measure airflow at terminals and calculate the total airflow.
   2. Measure fan static pressures as follows:
      a. Measure static pressure directly at the fan outlet or through the flexible connection.
      b. Measure static pressure directly at the fan inlet or through the flexible connection.
      c. Measure static pressure across each component that makes up the air-handling system.
      d. Report artificial loading of filters at the time static pressures are measured.
   3. Review Record Documents to determine variations in design static pressures versus actual static pressures. Calculate actual system-effect factors. Recommend adjustments to accommodate actual conditions.
   4. Obtain approval from Owner for adjustment of fan speed higher or lower than indicated speed. Comply with requirements in HVAC Sections for air-handling units for adjustment of fans, belts, and pulley sizes to achieve indicated air-handling-unit performance.
   5. Do not make fan-speed adjustments that result in motor overload. Consult equipment manufacturers about fan-speed safety factors. Modulate dampers and measure fan-motor amperage to ensure that no overload occurs. Measure amperage in full-cooling, full-heating, economizer, and any other operating mode to determine the maximum required brake horsepower.

B. Adjust volume dampers for main duct, submain ducts, and major branch ducts to indicated airflows.
   1. Measure airflow of submain and branch ducts.
   2. Adjust submain and branch duct volume dampers for specified airflow.
   3. Re-measure each submain and branch duct after all have been adjusted.

C. Adjust air inlets and outlets for each space to indicated airflows.
   1. Set airflow patterns of adjustable outlets for proper distribution without drafts.
   2. Measure inlets and outlets airflow.
   3. Adjust each inlet and outlet for specified airflow.
   4. Re-measure each inlet and outlet after they have been adjusted.

D. Verify final system conditions.
   1. Re-measure and confirm that minimum outdoor, return, and relief airflows are within design. Readjust to design if necessary.
   2. Re-measure and confirm that total airflow is within design.
   3. Re-measure all final fan operating data, rpms, volts, amps, and static profile.
   4. Mark all final settings.
   5. Test system in economizer mode. Verify proper operation and adjust if necessary.
   6. Measure and record all operating data.
   7. Record final fan-performance data.

3.6 PROCEDURES FOR VARIABLE-AIR-VOLUME SYSTEMS

A. Adjust the variable-air-volume systems as follows:
   1. Verify that the system static pressure sensor is located at least two-thirds of the distance down the duct from the fan discharge or as shown on the Drawings.
   2. Verify that the system is under static pressure control.
   3. Select the terminal unit that is most critical to the supply-fan airflow. Measure inlet static pressure, and adjust system static pressure control set point so the entering static pressure for the critical terminal unit is not less than the sum of the terminal-unit manufacturer's recommended minimum inlet static pressure plus the static pressure needed to overcome terminal-unit discharge system losses.
   4. Calibrate and balance each terminal unit for maximum and minimum design airflow as follows:
      a. Adjust controls so that terminal is calling for maximum airflow. Some controllers require starting with minimum airflow. Verify calibration procedure for specific project.
      b. Measure airflow and adjust calibration factor as required for design maximum airflow. Record calibration factor.
      c. When maximum airflow is correct, balance the air outlets downstream from terminal units.
      d. Adjust controls so that terminal is calling for minimum airflow.
      e. Measure airflow and adjust calibration factor as required for design minimum airflow. Record calibration factor. If no minimum calibration is available, note any deviation from design airflow.
      f. On constant volume terminals, in critical areas where room pressure is to be maintained, verify that the airflow remains constant over the full range of full cooling to full heating. Note any deviation from design airflow or room pressure.

5. After terminals have been calibrated and balanced, test and adjust system for total airflow. Adjust fans to deliver total design airflows within the maximum allowable fan speed listed by fan manufacturer.
    a. Set outside-air, return-air, and relief-air dampers for proper position that simulates minimum outdoor-air conditions.
    b. Set terminals for maximum airflow. If system design includes diversity, adjust terminals for maximum and minimum airflow so that connected total matches fan selection and simulates actual load in the building.
    c. Where duct conditions allow, measure airflow by Pitot-tube traverse. If necessary, perform multiple Pitot-tube traverses to obtain total airflow.
    d. Where duct conditions are not suitable for Pitot-tube traverse measurements, a coil traverse may be acceptable.
    e. If a reliable Pitot-tube traverse or coil traverse is not possible, measure airflow at terminals and calculate the total airflow.
6. Measure fan static pressures as follows:
    a. Measure static pressure directly at the fan outlet or through the flexible connection.
    b. Measure static pressure directly at the fan inlet or through the flexible connection.
    c. Measure static pressure across each component that makes up the air-handling system.
    d. Report any artificial loading of filters at the time static pressures are measured.
7. Set final return and outside airflow to the fan while operating at maximum return airflow and minimum outdoor airflow.
    a. Balance the return-air ducts and inlets the same as described for constant-volume air systems.
    b. Verify that terminal units are meeting design airflow under system maximum flow.
8. Re-measure the inlet static pressure at the most critical terminal unit and adjust the system static pressure set point to the most energy-efficient set point to maintain the optimum system static pressure. Record set point and give to controls contractor.
9. Verify final system conditions as follows:
    a. Re-measure and confirm that minimum outdoor, return, and relief airflows are within design. Readjust to match design if necessary.
    b. Re-measure and confirm that total airflow is within design.
    c. Re-measure final fan operating data, rpms, volts, amps, and static profile.
    d. Mark final settings.
    e. Test system in economizer mode. Verify proper operation and adjust if necessary. Measure and record all operating data.
    f. Verify tracking between supply and return fans.
    g. Verify building pressurization control by measuring building pressure at various operating conditions.

3.7 PROCEDURES FOR CONDENSING UNITS

A. Verify proper rotation of fans.

B. Measure entering- and leaving-air temperatures.

C. Record fan and motor operating data.

3.8 PROCEDURES FOR HEAT-TRANSFER COILS

A. Measure, adjust, and record the following data for each water coil:
   1. Entering- and leaving-water temperature.
   2. Water flow rate.
   3. Water pressure drop for major (more than 20 gpm) equipment coils, excluding unitary equipment such as reheat coils, unit heaters, and fan-coil units.
   4. Dry-bulb temperature of entering and leaving air.
   5. Wet-bulb temperature of entering and leaving air for cooling coils.
   6. Airflow.

B. Measure, adjust, and record the following data for each electric heating coil:
   1. Nameplate data.
   2. Airflow.
   3. Entering- and leaving-air temperature at full load.
   4. Voltage and amperage input of each phase at full load.
   5. Calculated kilowatt at full load.
   6. Fuse or circuit-breaker rating for overload protection.

C. Measure, adjust, and record the following data for each steam coil:
   1. Dry-bulb temperature of entering and leaving air.
   2. Airflow.
   3. Inlet steam pressure.

D. Measure, adjust, and record the following data for each refrigerant coil:
   1. Dry-bulb temperature of entering and leaving air.
   2. Wet-bulb temperature of entering and leaving air.
   3. Airflow.

3.9 SOUND TESTS

A. After the systems are balanced and construction is Substantially Complete, measure and record sound levels at locations as designated by the Architect.

B. Instrumentation:
   1. The sound-testing meter shall be a portable, general-purpose testing meter consisting of a microphone, processing unit, and readout.
   2. The sound-testing meter shall be capable of showing fluctuations at minimum and maximum levels, and measuring the equivalent continuous sound pressure level (LEQ).
   3. The sound-testing meter must be capable of using 1/3 octave band filters to measure mid-frequencies from 31.5 Hz to 8000 Hz.
   4. The accuracy of the sound-testing meter shall be plus or minus one decibel.

C. Test Procedures:
   1. Perform test at quietest background noise period. Note cause of unpreventable sound that affects test outcome.
   2. Equipment should be operating at design values.
   3. Calibrate the sound-testing meter prior to taking measurements.

4. Use a microphone suitable for the type of noise levels measured that is compatible with meter. Provide a windshield for outside or in-duct measurements.
5. Record a set of background measurements in dBA and sound pressure levels in the eight un-weighted octave bands 63 Hz to 8000 Hz (NC) with the equipment off.
6. Take sound readings in dBA and sound pressure levels in the eight un-weighted octave bands 63 Hz to 8000 Hz (NC) with the equipment operating.
7. Take readings no closer than 36 inches from a wall or from the operating equipment and approximately 60 inches from the floor, with the meter held or mounted on a tripod.
8. For outdoor measurements, move sound-testing meter slowly and scan area that has the most exposure to noise source being tested. Use A-weighted scale for this type of reading.

D. Reporting:
1. Report shall record the following:
   a. Location.
   b. System tested.
   c. dBA reading.
   d. Sound pressure level in each octave band with equipment on and off.
2. Plot sound pressure levels on NC worksheet with equipment on and off.

3.10 VIBRATION TESTS

A. After systems are balanced and construction is Substantially Complete, measure and record vibration levels on equipment having motor horsepower equal to or greater than 25.

B. Instrumentation:
1. Use portable, battery-operated, and microprocessor-controlled vibration meter with or without a built-in printer.
2. The meter shall automatically identify engineering units, filter bandwidth, amplitude, and frequency scale values.
3. The meter shall be able to measure machine vibration displacement in mils of deflection, velocity in inches per second, and acceleration in inches per second squared.
4. Verify calibration date is current for vibration meter before taking readings.

C. Test Procedures:
1. To ensure accurate readings, verify that accelerometer has a clean, flat surface and is mounted properly.
2. With the unit running, set up vibration meter in a safe, secure location. Connect transducer to meter with proper cables. Hold magnetic tip of transducer on top of the bearing, and measure unit in mils of deflection. Record measurement, then move transducer to the side of the bearing and record in mils of deflection. Record an axial reading in mils of deflection by holding nonmagnetic, pointed transducer tip on end of shaft.
3. Change vibration meter to velocity (inches per second) measurements. Repeat and record above measurements.
4. Record CPM or rpm.
5. Read each bearing on motor, fan, and pump as required. Track and record vibration levels from rotating component through casing to base.

D. Reporting:
1. Report shall record location and the system tested.

2. Include horizontal-vertical-axial measurements for tests.
3. Verify that vibration limits follow Specifications, or, if not specified, follow the General Machinery Vibration Severity Chart or Vibration Acceleration General Severity Chart from the AABC National Standards. Acceptable levels of vibration are normally "smooth" to "good."
4. Include in report General Machinery Vibration Severity Chart, with conditions plotted.

3.11 DUCT LEAKAGE TESTS

A. Witness the duct pressure testing performed by Installer.

B. Verify that proper test methods are used and that leakage rates are within specified tolerances.

C. Report deficiencies observed.

3.12 CONTROLS VERIFICATION

A. In conjunction with system balancing, perform the following:
1. Verify temperature control system is operating within the design limitations.
2. Confirm that the sequences of operation are in compliance with Contract Documents.
3. Verify that controllers are calibrated and function as intended.
4. Verify that controller set points are as indicated.
5. Verify the operation of lockout or interlock systems.
6. Verify the operation of valve and damper actuators.
7. Verify that controlled devices are properly installed and connected to correct controller.
8. Verify that controlled devices travel freely and are in position indicated by controller: open, closed, or modulating.
9. Verify location and installation of sensors to ensure that they sense only intended temperature, humidity, or pressure.

B. Reporting: Include a summary of verifications performed, remaining deficiencies, and variations from indicated conditions.

3.13 PROCEDURES FOR TESTING, ADJUSTING, AND BALANCING EXISTING SYSTEMS

A. Perform a preconstruction inspection of existing equipment that is to remain and be reused.
1. Measure and record the operating speed, airflow, and static pressure of each fan.
2. Measure motor voltage and amperage. Compare the values to motor nameplate information.
3. Check the refrigerant charge.
4. Check the condition of filters.
5. Check the condition of coils.
6. Check the operation of the drain pan and condensate-drain trap.
7. Check bearings and other lubricated parts for proper lubrication.
8. Report on the operating condition of the equipment and the results of the measurements taken. Report deficiencies.

B. Before performing testing and balancing of existing systems, inspect existing equipment that is to remain and be reused to verify that existing equipment has been cleaned and refurbished. Verify the following:
   1. New filters are installed.
   2. Coils are clean and fins combed.
   3. Drain pans are clean.
   4. Fans are clean.
   5. Bearings and other parts are properly lubricated.
   6. Deficiencies noted in the preconstruction report are corrected.

C. Perform testing and balancing of existing systems to the extent that existing systems are affected by the renovation work.
   1. Compare the indicated airflow of the renovated work to the measured fan airflows, and determine the new fan speed and the face velocity of filters and coils.
   2. Verify that the indicated airflows of the renovated work result in filter and coil face velocities and fan speeds that are within the acceptable limits defined by equipment manufacturer.
   3. If calculations increase or decrease the airflow rates and water flow rates by more than 5 percent, make equipment adjustments to achieve the calculated rates. If increase or decrease is 5 percent or less, equipment adjustments are not required.
   4. Balance each air outlet.

3.14 TOLERANCES

A. Set HVAC system's airflow rates and water flow rates within the following tolerances:
   1. Supply, Return, and Exhaust Fans and Equipment with Fans: Plus 5 percent or minus 0 percent.
   2. Air Outlets and Inlets: Plus or minus 10 percent.
   3. Heating-Water Flow Rate: Plus or minus 10 percent.
   4. Cooling-Water Flow Rate: Plus or minus 10 percent.

B. Maintaining pressure relationships as designed shall have priority over the tolerances specified above.

3.15 PROGRESS REPORTING

A. Initial Construction-Phase Report: Based on examination of the Contract Documents as specified in "Examination" Article, prepare a report on the adequacy of design for systems balancing devices. Recommend changes and additions to systems balancing devices to facilitate proper performance measuring and balancing. Recommend changes and additions to HVAC systems and general construction to allow access for performance measuring and balancing devices.

B. Status Reports: Prepare monthly progress reports to describe completed procedures, procedures in progress, and scheduled procedures. Include a list of deficiencies and problems found in systems being tested and balanced. Prepare a separate report for each system and each building floor for systems serving multiple floors.

3.16 FINAL REPORT

A. General: Prepare a certified written report; tabulate and divide the report into separate sections for tested systems and balanced systems.
   1. Include a certification sheet at the front of the report's binder, signed and sealed by the certified testing and balancing engineer.
   2. Include a list of instruments used for procedures, along with proof of calibration.
   3. Certify validity and accuracy of field data.

B. Final Report Contents: In addition to certified field-report data, include the following:
   1. Pump curves.
   2. Fan curves.
   3. Manufacturers' test data.
   4. Field test reports prepared by system and equipment installers.
   5. Other information relative to equipment performance; do not include Shop Drawings and Product Data.

C. General Report Data: In addition to form titles and entries, include the following data:
   1. Title page.
   2. Name and address of the TAB specialist.
   3. Project name.
   4. Project location.
   5. Architect's name and address.
   6. Engineer's name and address.
   7. Contractor's name and address.
   8. Report date.
   9. Signature of TAB supervisor who certifies the report.
   10. Table of Contents with the total number of pages defined for each section of the report. Number each page in the report.
   11. Summary of contents including the following:
      a. Indicated versus final performance.
      b. Notable characteristics of systems.
      c. Description of system operation sequence if it varies from the Contract Documents.
   12. Nomenclature sheets for each item of equipment.
   13. Data for terminal units, including manufacturer's name, type, size, and fittings.
   14. Notes to explain why certain final data in the body of reports vary from indicated values.
   15. Test conditions for fans and pump performance forms including the following:
      a. Settings for outdoor-, return-, and exhaust-air dampers.
      b. Conditions of filters.
      c. Cooling coil, wet- and dry-bulb conditions.
      d. Face and bypass damper settings at coils.
      e. Fan drive settings including settings and percentage of maximum pitch diameter.
      f. Inlet vane settings for variable-air-volume systems.
      g. Settings for supply-air, static-pressure controller.
      h. Other system operating conditions that affect performance.

D. System Diagrams: Include schematic layouts of air and hydronic distribution systems. Present each system with single-line diagram and include the following:
   1. Quantities of outdoor, supply, return, and exhaust airflows.
   2. Water and steam flow rates.

3. Duct, outlet, and inlet sizes.
4. Pipe and valve sizes and locations.
5. Terminal units.
6. Balancing stations.
7. Position of balancing devices.

E. Air-Handling-Unit Test Reports: For air-handling units with coils, include the following:
1. Unit Data:
   a. Unit identification.
   b. Location.
   c. Make and type.
   d. Model number and unit size.
   e. Manufacturer's serial number.
   f. Unit arrangement and class.
   g. Discharge arrangement.
   h. Sheave make, size in inches, and bore.
   i. Center-to-center dimensions of sheave and amount of adjustments in inches.
   j. Number, make, and size of belts.
   k. Number, type, and size of filters.
2. Motor Data:
   a. Motor make, and frame type and size.
   b. Horsepower and rpm.
   c. Volts, phase, and hertz.
   d. Full-load amperage and service factor.
   e. Sheave make, size in inches, and bore.
   f. Center-to-center dimensions of sheave and amount of adjustments in inches.
3. Test Data (Indicated and Actual Values):
   a. Total airflow rate in cfm.
   b. Total system static pressure in inches wg.
   c. Fan rpm.
   d. Discharge static pressure in inches wg.
   e. Filter static-pressure differential in inches wg.
   f. Preheat-coil static-pressure differential in inches wg.
   g. Cooling-coil static-pressure differential in inches wg.
   h. Heating-coil static-pressure differential in inches wg.
   i. Outdoor airflow in cfm.
   j. Return airflow in cfm.
   k. Outdoor-air damper position.
   l. Return-air damper position.
   m. Vortex damper position.

F. Apparatus-Coil Test Reports:
1. Coil Data:
   a. System identification.
   b. Location.
   c. Coil type.
   d. Number of rows.
   e. Fin spacing in fins per inch o.c.
   f. Make and model number.
   g. Face area in sq. ft.

h. Tube size in NPS.
i. Tube and fin materials.
j. Circuiting arrangement.

2. Test Data (Indicated and Actual Values):
   a. Airflow rate in cfm.
   b. Average face velocity in fpm.
   c. Air pressure drop in inches wg.
   d. Outdoor-air, wet- and dry-bulb temperatures in deg F.
   e. Return-air, wet- and dry-bulb temperatures in deg F.
   f. Entering-air, wet- and dry-bulb temperatures in deg F.
   g. Leaving-air, wet- and dry-bulb temperatures in deg F.
   h. Water flow rate in gpm.
   i. Water pressure differential in feet of head or psig.
   j. Entering-water temperature in deg F.
   k. Leaving-water temperature in deg F.
   l. Refrigerant expansion valve and refrigerant types.
   m. Refrigerant suction pressure in psig.
   n. Refrigerant suction temperature in deg F.
   o. Inlet steam pressure in psig.

G. Fan Test Reports: For supply, return, and exhaust fans, include the following:
1. Fan Data:
   a. System identification.
   b. Location.
   c. Make and type.
   d. Model number and size.
   e. Manufacturer's serial number.
   f. Arrangement and class.
   g. Sheave make, size in inches, and bore.
   h. Center-to-center dimensions of sheave and amount of adjustments in inches.
2. Motor Data:
   a. Motor make, and frame type and size.
   b. Horsepower and rpm.
   c. Volts, phase, and hertz.
   d. Full-load amperage and service factor.
   e. Sheave make, size in inches, and bore.
   f. Center-to-center dimensions of sheave, and amount of adjustments in inches.
   g. Number, make, and size of belts.
3. Test Data (Indicated and Actual Values):
   a. Total airflow rate in cfm.
   b. Total system static pressure in inches wg.
   c. Fan rpm.
   d. Discharge static pressure in inches wg.
   e. Suction static pressure in inches wg.

H. Round, Flat-Oval, and Rectangular Duct Traverse Reports: Include a diagram with a grid representing the duct cross-section and record the following:
1. Report Data:
   a. System and air-handling-unit number.
   b. Location and zone.

c. Traverse air temperature in deg F.
d. Duct static pressure in inches wg.
e. Duct size in inches.
f. Duct area in sq. ft.
g. Indicated airflow rate in cfm.
h. Indicated velocity in fpm.
i. Actual airflow rate in cfm.
j. Actual average velocity in fpm.
k. Barometric pressure in psig.

I. Air-Terminal-Device Reports:
1. Unit Data:
a. System and air-handling unit identification.
b. Location and zone.
c. Apparatus used for test.
d. Area served.
e. Make.
f. Number from system diagram.
g. Type and model number.
h. Size.
i. Effective area in sq. ft.
2. Test Data (Indicated and Actual Values):
a. Airflow rate in cfm.
b. Air velocity in fpm.
c. Preliminary airflow rate as needed in cfm.
d. Preliminary velocity as needed in fpm.
e. Final airflow rate in cfm.
f. Final velocity in fpm.
g. Space temperature in deg F.

J. System-Coil Reports: For reheat coils and water coils of terminal units, include the following:
1. Unit Data:
a. System and air-handling-unit identification.
b. Location and zone.
c. Room or riser served.
d. Coil make and size.
e. Flowmeter type.
2. Test Data (Indicated and Actual Values):
a. Airflow rate in cfm.
b. Entering-water temperature in deg F.
c. Leaving-water temperature in deg F.
d. Water pressure drop in feet of head or psig.
e. Entering-air temperature in deg F.
f. Leaving-air temperature in deg F.

K. Instrument Calibration Reports:
1. Report Data:
a. Instrument type and make.
b. Serial number.
c. Application.

d. Dates of use.
e. Dates of calibration.

3.17 VERIFICATION OF TAB REPORT

A. The TAB specialist's test and balance engineer shall conduct the inspection in the presence of commissioning authority.

B. Commissioning authority shall randomly select measurements, documented in the final report, to be rechecked. Rechecking shall be limited to either 10 percent of the total measurements recorded or the extent of measurements that can be accomplished in a normal 8-hour business day.

C. If rechecks yield measurements that differ from the measurements documented in the final report by more than the tolerances allowed, the measurements shall be noted as "FAILED."

D. If the number of "FAILED" measurements is greater than 10 percent of the total measurements checked during the final inspection, the testing and balancing shall be considered incomplete and shall be rejected.

E. If TAB work fails, proceed as follows:
1. TAB specialists shall recheck all measurements and make adjustments. Revise the final report and balancing device settings to include all changes; resubmit the final report and request a second final inspection.
2. If the second final inspection also fails, Owner may contract the services of another TAB specialist to complete TAB work according to the Contract Documents and deduct the cost of the services from the original TAB specialist's final payment.
3. If the second verification also fails, Owner may contact AABC, NEBB or TABB Headquarters regarding the Performance Guaranty.

F. Prepare test and inspection reports.

3.18 ADDITIONAL TESTS

A. Within 90 days of completing TAB, perform additional TAB to verify that balanced conditions are being maintained throughout and to correct unusual conditions.

B. Seasonal Periods: If initial TAB procedures were not performed during near-peak summer and winter conditions, perform additional TAB during near-peak summer and winter conditions.

END OF SECTION 230593

SECTION 230713 - DUCT INSULATION

PART 1 - GENERAL

1.1 RELATED DOCUMENTS

A. Drawings and general provisions of the Contract, including General and Supplementary Conditions and Division 01 Specification Sections, apply to this Section. Review these documents for coordination with additional requirements and information that apply to work under this Section

1.2 SUMMARY

A. Section includes insulating the following duct services:
   1. Indoor, concealed supply and outdoor air.
   2. Indoor, exposed supply and outdoor air.
   3. Indoor, concealed return located in unconditioned space.
   4. Indoor, exposed return located in unconditioned space.
   5. Indoor, concealed, Type I, commercial, kitchen hood exhaust.
   6. Indoor, exposed, Type I, commercial, kitchen hood exhaust.
   7. Indoor, concealed exhaust between isolation damper and penetration of building exterior.
   8. Indoor, exposed exhaust between isolation damper and penetration of building exterior.
   9. Outdoor, concealed supply and return.
   10. Outdoor, exposed supply and return.

B. Related Sections:
   1. Section 230716 "HVAC Equipment Insulation."
   2. Section 230719 "HVAC Piping Insulation."
   3. Section 233113 "Metal Ducts" for duct liners.

1.3 ACTION SUBMITTALS

A. Submittals shall be formatted per Section 230000 “General Mechanical Requirements”. The manufacturer shall resubmit the specification section showing compliance with each respective paragraphs and specified items and features in that particular specification section. All **exceptions** shall be clearly identified by referencing respective paragraph and other requirements. Next to each specification item, indicate the following:
   1. “No Exception Taken”.
   2. “Exception”. All exceptions shall be clearly identified by referencing respective paragraph and other requirements along with proposed alternative.

B. Product Data: For each type of product indicated. Include thermal conductivity, water-vapor permeance thickness, and jackets (both factory- and field-applied if any).

C. Sustainable Design/LEED Submittals:

1. Product Data for Credit EQ 4.1: For adhesives and sealants, including printed statement of VOC content.

D. Shop Drawings: Include plans, elevations, sections, details, and attachments to other work.
1. Detail application of protective shields, saddles, and inserts at hangers for each type of insulation and hanger.
2. Detail insulation application at elbows, fittings, dampers, specialties and flanges for each type of insulation.
3. Detail application of field-applied jackets.
4. Detail application at linkages of control devices.

1.4 INFORMATIONAL SUBMITTALS

A. Qualification Data: For qualified Installer.

B. Material Test Reports: From a qualified testing agency acceptable to authorities having jurisdiction indicating, interpreting, and certifying test results for compliance of insulation materials, sealers, attachments, cements, and jackets, with requirements indicated. Include dates of tests and test methods employed.

C. Field quality-control reports.

1.5 QUALITY ASSURANCE

A. Installer Qualifications: Skilled mechanics who have successfully completed an apprenticeship program or another craft training program certified by the Department of Labor, Bureau of Apprenticeship and Training.

B. Surface-Burning Characteristics: For insulation and related materials, as determined by testing identical products according to ASTM E 84, by a testing agency acceptable to authorities having jurisdiction. Factory label insulation and jacket materials and adhesive, mastic, tapes, and cement material containers, with appropriate markings of applicable testing agency.
1. Insulation Installed Indoors: Flame-spread index of 25 or less, and smoke-developed index of 50 or less.
2. Insulation Installed Outdoors: Flame-spread index of 75 or less, and smoke-developed index of 150 or less.

1.6 DELIVERY, STORAGE, AND HANDLING

A. Packaging: Insulation material containers shall be marked by manufacturer with appropriate ASTM standard designation, type and grade, and maximum use temperature.

1.7 COORDINATION

A. Coordinate sizes and locations of supports, hangers, and insulation shields specified in Section 230529 "Hangers and Supports for HVAC Piping and Equipment."

B. Coordinate clearance requirements with duct Installer for duct insulation application. Before preparing ductwork Shop Drawings, establish and maintain clearance requirements for installation of insulation and field-applied jackets and finishes and for space required for maintenance.

C. Coordinate installation and testing of heat tracing.

1.8 SCHEDULING

A. Schedule insulation application after pressure testing systems. Insulation application may begin on segments that have satisfactory test results.

B. Complete installation and concealment of plastic materials as rapidly as possible in each area of construction.

PART 2 - PRODUCTS

2.1 INSULATION MATERIALS

A. Comply with requirements in "Duct Insulation Schedule, General," "Indoor Duct and Plenum Insulation Schedule," and "Aboveground, Outdoor Duct and Plenum Insulation Schedule" articles for where insulating materials shall be applied.

B. Products shall not contain asbestos, lead, mercury, or mercury compounds.

C. Products that come in contact with stainless steel shall have a leachable chloride content of less than 50 ppm when tested according to ASTM C 871.

D. Insulation materials for use on austenitic stainless steel shall be qualified as acceptable according to ASTM C 795.

E. Foam insulation materials shall not use CFC or HCFC blowing agents in the manufacturing process.

F. Mineral-Fiber Blanket Insulation: Mineral or glass fibers bonded with a thermosetting resin. Comply with ASTM C 553, Type II and ASTM C 1290, Type III with factory-applied FSK jacket. Factory-applied jacket requirements are specified in "Factory-Applied Jackets" Article.
   1. Manufacturers: Subject to compliance with requirements, provide products by one of the following:
      a. CertainTeed Corporation; SoftTouch Duct Wrap
      b. Johns Manville; Microlite.
      c. Knauf Insulation; Friendly Feel Duct Wrap.
      d. Owens Corning; SOFTR All-service Duct Wrap.

2.2 FIRE-RATED INSULATION SYSTEMS

A. Fire-Rated Board: Structural-grade, press-molded, xonolite calcium silicate, fireproofing board suitable for operating temperatures up to 1700 deg F. Comply with ASTM C 656, Type II, Grade 6. Tested and certified to provide a [**1**] [**2**]-hour fire rating by an NRTL acceptable to authorities having jurisdiction.
   1. Manufacturers: Subject to compliance with requirements, provide products by the following:
      a. 3M

B. Fire-Rated Blanket: High-temperature, flexible, blanket insulation with FSK jacket that is tested and certified to provide a [**1**] [**2**]-hour fire rating by an NRTL acceptable to authorities having jurisdiction.
   1. Manufacturers: Subject to compliance with requirements, provide products by one of the following:
      a. 3M.
      b. Morgan Thermal Ceramics
   2. Manufacturers: Subject to compliance with requirements, provide products by one of the following:
      a. Childers Brand; H. B. Fuller Construction Products.
      b. Eagle Bridges - Marathon Industries.
      c. Mon-Eco Industries, Inc.

2.3 MASTICS

A. Materials shall be compatible with insulation materials, jackets, and substrates; comply with MIL-PRF-19565C, Type II.
   1. For indoor applications, use mastics that have a VOC content of 50 g/L or less when calculated according to 40 CFR 59, Subpart D (EPA Method 24).

B. Vapor-Barrier Mastic: Water based; suitable for indoor use on below ambient services.
   1. Manufacturers: Subject to compliance with requirements, provide products by one of the following:
      a. Childers Brand; H. B. Fuller Construction Products.
      b. Foster Brand; H. B. Fuller
      c. Knauf Insulation.
   2. Water-Vapor Permeance: ASTM E 96/E 96M, Procedure B, 0.013 perm at 43-mil dry film thickness.
   3. Service Temperature Range: Minus 20 to plus 180 deg F.
   4. Solids Content: ASTM D 1644, 58 percent by volume and 70 percent by weight.
   5. Color: White.

C. Vapor-Barrier Permeance: ASTM 96/E 96M, Procedure B, 0.013 perm at 43-mil dry film thickness.
   1. Manufacturers: Subject to compliance with requirements, available manufacturers offering products that may be incorporated into the Work include, but are not limited to the following:
      a. Childers Brand; H. B. Fuller Construction Products.; CP10
      b. Eagle Bridges - Marathon Industries.; 550

c. Foster Brand; H. B. Fuller Construction Products.; 146-50
2. Water-Vapor Permeance: ASTM F 1249, 0.05 perm at 30-mil dry film thickness.
3. Service Temperature Range: Minus 50 to plus 220 deg F.
4. Solids Content: ASTM D 1644, 33 percent by volume and 46 percent by weight.
5. Color: White.

2.4 SEALANTS

A. FSK and Metal Jacket Flashing Sealants:
1. Manufacturers: Subject to compliance with requirements, provide products by one of the following:
a. Childers Brand; H. B. Fuller Construction Products.; CP-76.
b. Foster Brand; H. B. Fuller Construction Products.; 95-44.
c. Mon-Eco Industries, Inc.; 44-05
d. Eagle Bridges – Marathon Industries; 405.
2. Materials shall be compatible with insulation materials, jackets, and substrates.
3. Fire- and water-resistant, flexible, elastomeric sealant.
4. Service Temperature Range: 20 to plus 250 deg F.
5. Color: Aluminum.
6. For indoor applications, use sealants that have a VOC content of 420 g/L or less when calculated according to 40 CFR 59, Subpart D (EPA Method 24).
7. Use sealants that comply with the testing and product requirements of the California Department of Health Services' "Standard Practice for the Testing of Volatile Organic Emissions from Various Sources Using Small-Scale Environmental Chambers," including 2004 Addenda.

2.5 FIELD-APPLIED JACKETS

A. Field-applied jackets shall comply with ASTM C 921, Type I, unless otherwise indicated.

B. Metal Jacket:
1. Manufacturers: Subject to compliance with requirements, provide products by one of the following:
a. Childers.
b. ITW Insulation Systems; Illinois Tool Works, Inc.
c. RPR Products, Inc.
2. Aluminum Jacket: Comply with ASTM B 209, Alloy 3003, 3005, 3105, or 5005, Temper H-14.
a. Products: Subject to compliance with requirements, available products that may be incorporated into the Work include, but are not limited to, the following:
1) Childers Brand, Specialty Construction Brands, Inc., a business of H. B. Fuller Company; Metal Jacketing Systems.
2) ITW Insulation Systems; Aluminum and Stainless Steel Jacketing.
3) RPR Products, Inc.; Insul-Mate.
3. Factory cut and rolled to size.
4. Finish and thickness are indicated in field-applied jacket schedules.
a. Moisture Barrier for Indoor Applications: 3-mil- thick, heat-bonded polyethylene and kraft paper.

b. Moisture Barrier for Outdoor Applications: 2.5-mil- thick polysurlyn.

2.6 TAPES

A. FSK Tape: Foil-face, vapor-retarder tape matching factory-applied jacket with acrylic adhesive; complying with ASTM C 1136.
   1. Manufacturers: Subject to compliance with requirements, provide products by one of the following:
      a. Compac Corporation; 110 and 111.
      b. ABI, Ideal Tape Division; 491 AWF FSK.
      c. Venture Tape; 1525 CW NT, 1528 CW, and 1528 CW/SQ.
      d. Avery Dennison Corporation, Specialty Tapes Division; Fasson 0827.
   2. Width: 3 inches.
   3. Thickness: 6.5 mils.
   4. Adhesion: 90 ounces force/inch in width.
   5. Elongation: 2 percent.
   6. Tensile Strength: 40 lbf/inch in width.
   7. FSK Tape Disks and Squares: Precut disks or squares of FSK tape.

2.7 SECUREMENTS

A. Bands:
   1. Manufacturers: Subject to compliance with requirements, provide products by one of the following:
      a. ITW Insulation Systems; Illinois Tool Works, Inc.; Gerrard Strapping and Seals.
      b. RPR Products, Inc.; Insul-Mate Strapping, Seals, and Springs.
   2. Aluminum: ASTM B 209, Alloy 3003, 3005, 3105, or 5005; Temper H-14, 0.020 inch thick, 3/4 inch wide with wing seal or closed seal.
   3. Springs: Twin spring set constructed of stainless steel with ends flat and slotted to accept metal bands. Spring size determined by manufacturer for application.
   4. Self-Sticking-Base Insulation Hangers: Baseplate welded to projecting spindle that is capable of holding insulation, of thickness indicated, securely in position indicated when self-locking washer is in place. Comply with the following requirements:
      a. Midwest Fasteners or approved equal.
      b. Baseplate: Galvanized carbon-steel sheet, 0.030 inch thick by 2 inches square.
      c. Spindle: Zinc-coated, low-carbon steel, fully annealed, 0.106-inch- diameter shank, length to suit depth of insulation indicated.
      d. Adhesive-backed base with a peel-off protective cover.
   5. Insulation-Retaining Washers: Self-locking washers formed from 0.016-inch- thick, galvanized-steel sheet, with beveled edge sized as required to hold insulation securely in place but not less than 1-1/2 inches in diameter.

B. Wire: 0.062-inch soft-annealed, stainless steel.
   1. Manufacturers: Subject to compliance with requirements, provide product by:
      a. C & F Wire, or equal.

PART 3 - EXECUTION

3.1 EXAMINATION

A. Examine substrates and conditions for compliance with requirements for installation tolerances and other conditions affecting performance of insulation application.
   1. Verify that systems to be insulated have been tested and are free of defects.
   2. Verify that surfaces to be insulated are clean and dry.

B. Proceed with installation only after unsatisfactory conditions have been corrected.

3.2 PREPARATION

A. Surface Preparation: Clean and dry surfaces to receive insulation. Remove materials that will adversely affect insulation application.

3.3 GENERAL INSTALLATION REQUIREMENTS

A. Install insulation materials, accessories, and finishes with smooth, straight, and even surfaces; free of voids throughout the length of ducts and fittings.

B. Install insulation materials, vapor barriers or retarders, jackets, and thicknesses required for each item of duct system as specified in insulation system schedules.

C. Install accessories compatible with insulation materials and suitable for the service. Install accessories that do not corrode, soften, or otherwise attack insulation or jacket in either wet or dry state.

D. Install insulation with longitudinal seams at top and bottom of horizontal runs.

E. Install multiple layers of insulation with longitudinal and end seams staggered.

F. Keep insulation materials dry during application and finishing.

G. Install insulation with tight longitudinal seams and end joints. Bond seams and joints with adhesive recommended by insulation material manufacturer.

H. Install insulation with least number of joints practical.

I. Where vapor barrier is indicated, seal joints, seams, and penetrations in insulation at hangers, supports, anchors, and other projections with vapor-barrier mastic.
   1. Install insulation continuously through hangers and around anchor attachments.
   2. For insulation application where vapor barriers are indicated, extend insulation on anchor legs from point of attachment to supported item to point of attachment to structure. Taper and seal ends at attachment to structure with vapor-barrier mastic.

3. Install insert materials and install insulation to tightly join the insert. Seal insulation to insulation inserts with adhesive or sealing compound recommended by insulation material manufacturer.

J. Apply adhesives, mastics, and sealants at manufacturer's recommended coverage rate and wet and dry film thicknesses.

K. Install insulation with factory-applied jackets as follows:
1. Draw jacket tight and smooth.
2. Cover circumferential joints with 3-inch- wide strips, of same material as insulation jacket. Secure strips with adhesive and outward clinching staples along both edges of strip, spaced 4 inches o.c.
3. Overlap jacket longitudinal seams at least 1-1/2 inches. Clean and dry surface to receive self-sealing lap. Staple laps with outward clinching staples along edge at 2 inches o.c.
   a. For below ambient services, apply vapor-barrier mastic over staples.
4. Cover joints and seams with tape, according to insulation material manufacturer's written instructions, to maintain vapor seal.
5. Where vapor barriers are indicated, apply vapor-barrier mastic on seams and joints and at ends adjacent to duct flanges and fittings.

L. Cut insulation in a manner to avoid compressing insulation more than 75 percent of its nominal thickness.

M. Finish installation with systems at operating conditions. Repair joint separations and cracking due to thermal movement.

N. Repair damaged insulation facings by applying same facing material over damaged areas. Extend patches at least 4 inches beyond damaged areas. Adhere, staple, and seal patches similar to butt joints.

3.4 PENETRATIONS

A. Insulation Installation at Roof Penetrations: Install insulation continuously through roof penetrations.
1. Seal penetrations with flashing sealant.
2. For applications requiring only indoor insulation, terminate insulation above roof surface and seal with joint sealant. For applications requiring indoor and outdoor insulation, install insulation for outdoor applications tightly joined to indoor insulation ends. Seal joint with joint sealant.
3. Extend jacket of outdoor insulation outside roof flashing at least 2 inches below top of roof flashing.
4. Seal jacket to roof flashing with flashing sealant.

B. Insulation Installation at Aboveground Exterior Wall Penetrations: Install insulation continuously through wall penetrations.
1. Seal penetrations with flashing sealant.
2. For applications requiring only indoor insulation, terminate insulation inside wall surface and seal with joint sealant. For applications requiring indoor and outdoor insulation, install

insulation for outdoor applications tightly joined to indoor insulation ends. Seal joint with joint sealant.

3. Extend jacket of outdoor insulation outside wall flashing and overlap wall flashing at least 2 inches.
4. Seal jacket to wall flashing with flashing sealant.

C. Insulation Installation at Interior Wall and Partition Penetrations (That Are Not Fire Rated): Install insulation continuously through walls and partitions.

D. Insulation Installation at Fire-Rated Wall and Partition Penetrations: Terminate insulation at fire damper sleeves for fire-rated wall and partition penetrations. Externally insulate damper sleeves to match adjacent insulation and overlap duct insulation at least 2 inches.
1. Comply with requirements in Section 078413 "Penetration Firestopping."

E. Insulation Installation at Floor Penetrations:
1. Duct: For penetrations through fire-rated assemblies, terminate insulation at fire damper sleeves and externally insulate damper sleeve beyond floor to match adjacent duct insulation. Overlap damper sleeve and duct insulation at least 2 inches.
2. Seal penetrations through fire-rated assemblies. Comply with requirements in Section 078413 "Penetration Firestopping."

3.5 INSTALLATION OF MINERAL-FIBER INSULATION

A. Blanket Insulation Installation on Ducts and Plenums: Secure with adhesive and insulation pins.
1. Apply adhesives according to manufacturer's recommended coverage rates per unit area, for 50 percent coverage of duct and plenum surfaces.
2. Apply adhesive to entire circumference of ducts and to all surfaces of fittings and transitions.
3. Install either capacitor-discharge-weld pins and speed washers or cupped-head, capacitor-discharge-weld pins on sides and bottom of horizontal ducts and sides of vertical ducts as follows:
   a. On duct sides with dimensions 18 inches and smaller, place pins along longitudinal centerline of duct. Space 3 inches maximum from insulation end joints, and 16 inches o.c.
   b. On duct sides with dimensions larger than 18 inches, place pins 16 inches o.c. each way, and 3 inches maximum from insulation joints. Install additional pins to hold insulation tightly against surface at cross bracing.
   c. Pins may be omitted from top surface of horizontal, rectangular ducts and plenums.
   d. Do not over compress insulation during installation.
   e. Impale insulation over pins and attach speed washers.
   f. Cut excess portion of pins extending beyond speed washers or bend parallel with insulation surface. Cover exposed pins and washers with tape matching insulation facing.
4. For ducts and plenums with surface temperatures below ambient, install a continuous unbroken vapor barrier. Create a facing lap for longitudinal seams and end joints with insulation by removing 2 inches from one edge and one end of insulation segment. Secure laps to adjacent insulation section with 1/2-inch outward-clinching staples, 1 inch o.c. Install vapor barrier consisting of factory- or field-applied jacket, adhesive, vapor-barrier mastic, and sealant at joints, seams, and protrusions.

a. Repair punctures, tears, and penetrations with tape or mastic to maintain vapor-barrier seal.
b. Install vapor stops for ductwork and plenums operating below 50 deg F at 18-foot intervals. Vapor stops shall consist of vapor-barrier mastic applied in a Z-shaped pattern over insulation face, along butt end of insulation, and over the surface. Cover insulation face and surface to be insulated a width equal to two times the insulation thickness, but not less than 3 inches.

5. Overlap un-faced blankets a minimum of 2 inches on longitudinal seams and end joints. At end joints, secure with steel bands spaced a maximum of 18 inches o.c.
6. Install insulation on rectangular duct elbows and transitions with a full insulation section for each surface. Install insulation on round and flat-oval duct elbows with individually mitered gores cut to fit the elbow.
7. Insulate duct stiffeners, hangers, and flanges that protrude beyond insulation surface with 6-inch- wide strips of same material used to insulate duct. Secure on alternating sides of stiffener, hanger, and flange with pins spaced 6 inches o.c.

3.6 FIELD-APPLIED JACKET INSTALLATION

A. Where FSK jackets are indicated, install as follows:
1. Draw jacket material smooth and tight.
2. Install lap or joint strips with same material as jacket.
3. Secure jacket to insulation with manufacturer's recommended adhesive.
4. Install jacket with 1-1/2-inch laps at longitudinal seams and 3-inch- wide joint strips at end joints.
5. Seal openings, punctures, and breaks in vapor-retarder jackets and exposed insulation with vapor-barrier mastic.

B. Where metal jackets are indicated, install with 2-inch overlap at longitudinal seams and end joints. Overlap longitudinal seams arranged to shed water. Seal end joints with weatherproof sealant recommended by insulation manufacturer. Secure jacket with stainless-steel bands 12 inches o.c. and at end joints.

3.7 FIRE-RATED INSULATION SYSTEM INSTALLATION

A. Where fire-rated insulation system is indicated, secure system to ducts and duct hangers and supports to maintain a continuous fire rating.

B. Insulate duct access panels and doors to achieve same fire rating as duct.

C. Install firestopping at penetrations through fire-rated assemblies. Fire-stop systems are specified in Section 078413 "Penetration Firestopping."

3.8 FINISHES

A. Insulation with ASJ, or Other Paintable Jacket Material: Paint jacket with paint system identified below and as specified in Section 099113 "Exterior Painting" and Section 099123 "Interior Painting."

1. Flat Acrylic Finish: Two finish coats over a primer that is compatible with jacket material and finish coat paint. Add fungicidal agent to render fabric mildew proof.
   a. Finish Coat Material: Interior, flat, latex-emulsion size.

B. Color: Final color as selected by Architect. Vary first and second coats to allow visual inspection of the completed Work.

C. Do not field paint aluminum or stainless-steel jackets.

3.9 DUCT INSULATION SCHEDULE, GENERAL

A. Plenums and Ducts Requiring Insulation:
1. Indoor, concealed supply and outdoor air.
2. Indoor, exposed supply and outdoor air in unconditioned space.
3. Indoor, concealed return located in unconditioned space.
4. Indoor, exposed return located in unconditioned space.
5. Indoor, concealed, Type I, commercial, kitchen hood exhaust.
6. Indoor, exposed, Type I, commercial, kitchen hood exhaust.
7. Outdoor, concealed supply and return.
8. Outdoor, exposed supply and return.

B. Items Not Insulated:
1. Metal ducts with duct liner of sufficient thickness to comply with Title 24 energy code.
2. Metal ducts located in conditioned spaces.
3. Factory-insulated flexible ducts.
4. Factory-insulated plenums and casings.
5. Flexible connectors.
6. Vibration-control devices.
7. Factory-insulated access panels and doors.

3.10 INDOOR DUCT AND PLENUM INSULATION SCHEDULE

A. Supply and return air duct and plenum insulation shall be the following:
1. Mineral-Fiber Blanket: 1.5 inches thick and 0.75-lb/cu. ft. nominal density.

B. Type I, Commercial, Kitchen Hood Exhaust Duct and Plenum Insulation: Fire-rated blanket thickness as required to achieve 2-hour fire rating.

3.11 ABOVEGROUND, OUTDOOR DUCT AND PLENUM INSULATION SCHEDULE

A. Insulation materials and thicknesses are identified below. If more than one material is listed for a duct system, selection from materials listed is Contractor's option.

B. Supply and return air duct insulation shall be the following:
1. Mineral-Fiber Blanket: 2 inches thick and 0.75-lb/cu. ft. nominal density.

3.12 OUTDOOR, FIELD-APPLIED JACKET SCHEDULE

A. Install jacket over insulation material. For insulation with factory-applied jacket, install the field-applied jacket over the factory-applied jacket.

B. Ducts and Plenums, Exposed, up to 48 Inches in Diameter or with Flat Surfaces up to 72 Inches:
   1. Aluminum, smooth: 0.024 inch thick.
   2. Painted Aluminum, smooth: 0.024 inch thick.

C. Ducts and Plenums, Exposed, Larger Than 48 Inches in Diameter or with Flat Surfaces Larger Than 72 Inches:
   1. Painted Aluminum, smooth with 2-1/2-Inch- Deep Corrugations 0.040 inch thick.

END OF SECTION 230713

SECTION 230719 - HVAC PIPING INSULATION

PART 1 - GENERAL

1.1 RELATED DOCUMENTS

A. Drawings and general provisions of the Contract, including General and Supplementary Conditions and Division 01 Specification Sections, apply to this Section.

1.2 SUMMARY

A. Section includes insulating the following HVAC piping systems:
   1. Condensate drain piping.
   2. Chilled-water piping.
   3. Heating hot-water piping.
   4. Steam and steam condensate piping.
   5. Refrigerant suction and hot-gas piping.

B. Related Sections:
   1. Section 230713 "Duct Insulation."
   2. Section 230716 "HVAC Equipment Insulation."
   3. Section 232113.13 "Underground Hydronic Piping" for pre-insulated pipe insulation in underground piping outside the building.

1.3 ACTION SUBMITTALS

A. Submittals shall be formatted per Section 230000 “General Mechanical Requirements”. The manufacturer shall resubmit the specification section showing compliance with each respective paragraphs and specified items and features in that particular specification section. All **exceptions** shall be clearly identified by referencing respective paragraph and other requirements. Next to each specification item, indicate the following:
   1. “No Exception Taken”.
   2. “Exception”. All exceptions shall be clearly identified by referencing respective paragraph and other requirements along with proposed alternative.

B. Product Data: For each type of product indicated. Include thermal conductivity, water-vapor permeance, thickness, and jackets (both factory and field applied, if any). Clearly mark the materials being provided and its intended use of each product

C. Shop Drawings: Include plans, elevations, sections, details, and attachments to other work.
   1. Detail application of protective shields, saddles, and inserts at hangers for each type of insulation and hanger.
   2. Detail attachment and covering of heat tracing inside insulation.
   3. Detail insulation application at pipe expansion joints for each type of insulation.

4. Detail insulation application at elbows, fittings, flanges, valves, and specialties for each type of insulation.
5. Detail removable insulation at piping specialties.
6. Detail application of field-applied jackets.
7. Detail application at linkages of control devices.

1.4 INFORMATIONAL SUBMITTALS

A. Qualification Data: For qualified Installer.

B. Material Test Reports: From a qualified testing agency acceptable to authorities having jurisdiction indicating, interpreting, and certifying test results for compliance of insulation materials, sealers, attachments, cements, and jackets, with requirements indicated. Include dates of tests and test methods employed.

C. Field quality-control reports if requested by the Owner's Representative.

1.5 QUALITY ASSURANCE

A. Insulation materials shall be manufactured at facilities certified and registered with an approved registrar to conform to the ISO 9001 Quality Standard.

B. All work shall conform to accepted industry and trade standards for commercial and industrial insulations and shall conform with manufacturer's recommendations.

C. Installation shall be by licensed applicators.

D. Insulation materials that have become wet or contaminated shall not be installed.

E. Installer Qualifications: Skilled mechanics who have successfully completed an apprenticeship program or another craft training program certified by the Department of Labor, Bureau of Apprenticeship and Training.

F. Surface-Burning Characteristics: For insulation and related materials, as determined by testing identical products according to ASTM E 84, by a testing and inspecting agency acceptable to authorities having jurisdiction. Factory label insulation and jacket materials and adhesive, mastic, tapes, and cement material containers, with appropriate markings of applicable testing agency.
   1. Insulation Installed Indoors: Flame-spread index of 25 or less, and smoke-developed index of 50 or less.
   2. Insulation Installed Outdoors: Flame-spread index of 75 or less, and smoke-developed index of 150 or less.

1.6 DELIVERY, STORAGE, AND HANDLING

A. Deliver all materials (insulation, coverings, tapes, cements, adhesives, coatings, etc.) to the jobsite in factory containers with manufacturer's label showing manufacturer, product name and product hazard information.

B. Insulation shall be delivered to the job site in original, unopened manufacturer's containers.

C. Insulation shall be stored in a dry location and kept dry throughout construction. Wet or damaged insulation shall be removed and replaced by the Contractor at no additional cost.

1.7 COORDINATION

A. Coordinate sizes and locations of supports, hangers, and insulation shields specified in Section 230529 "Hangers and Supports for HVAC Systems."

B. Coordinate clearance requirements with piping Installer for piping insulation application. Before preparing piping Shop Drawings, establish and maintain clearance requirements for installation of insulation and field-applied jackets and finishes and for space required for maintenance.

1.8 SCHEDULING

A. Schedule insulation application after pressure testing systems. Insulation application may begin on segments that have satisfactory test results.

PART 2 - PRODUCTS

2.1 INSULATION MATERIALS

A. Products shall not contain CFC, asbestos, lead, mercury, or mercury compounds.

B. Insulation shall meet fire and smoke hazard ratings as tested under procedure ASTM E-84, NFPA 255, and UL 723 and shall not exceed flame spread rating of 25 and maximum smoke developed rating of 50.

C. Mineral-Fiber, Preformed Pipe Insulation:
   1. Products: Subject to compliance with requirements, provide one of the following:
      a. Johns Manville's Micro-Lok HP all-service (ASJ) vapor-retarder jacket with a self-sealing longitudinal closure lap (SSL) and butt strips.
      b. Owens Corning; ASJ Fiberglas Pipe Insulation.
   2. Preformed mineral fiber pipe insulation with factory applied all-service vapor-retarder jacket (ASJ) jacket with a self-sealing longitudinal closure lap (SSL) and butt strips or approved alternate to seal butt joints. Preformed mineral fiber pipe insulation shall conform to ASTM C547. The ASJ facing shall conform to ASTM C1136 Type I.
   3. Preformed mineral fiber pipe insulation with factory applied all-service vapor-retarder jacket (ASJ) jacket shall have a flame spread rating not greater than 25 and a smoke developed rating not greater than 50 when tested as in accordance with ASTM E84, UL 723.
   4. Thermal conductivity (k-value): 0.23 Btu-in/hr-ft^2-°F at 75°F
   5. Preformed mineral fiber pipe insulation shall have a water vapor sorption of less than 5% by weight as tested in accordance ASTM C 547.

6. All service jacket (ASJ) shall have a water vapor permeance of 0.02 perms or less as tested in accordance to ASTM E96, procedure “A”.
7. When a vapor mastic is required, a water vapor permeance of 0.02 per ASTM E-96 Procedure B must be achieved.
8. All accessory materials such as field installed jackets, mastics, coatings, tapes, fasteners shall be recommended by each component manufacturer for the specified application or as listed in the NAIMA Guide to Insulating Chilled Water Systems with Mineral Fiber Pipe Insulation.
9. Fittings, valves, tees, etc. shall be insulated with fiberglass insulation inserts covered with white PVC insulated fitting covers.

D. Phenolic Pipe Insulation:
1. Products: Subject to compliance with requirements, provide one of the following:
   a. Dyplast Products. Dytherm Phenolic
   b. Resolco Inc. Insul-Phen Green.
   c. Polyguard.
2. Preformed pipe insulation of rigid, expanded, closed-cell structure. Comply with ASTM C 1126, Type III, Grade 1.
3. Block insulation of rigid, expanded, closed-cell structure. Comply with ASTM C 1126, Type II, Grade 1.
4. Thermal conductivity (k-value): 0.18 Btu-in/hr-ft^2-°F at 75°F
5. Factory fabricate shapes according to ASTM C 450 and ASTM C 585

E. Cellular Glass Insulation:
1. Products: Subject to compliance with requirements, provide the following:
   a. Pittsburg Corning Corporation Foamglas.
   b. Cell-U Foam Corporation Ultra-CUF.
2. Inorganic, incombustible, foamed or cellulated glass with annealed, rigid, hermetically sealed cells. Factory-applied jacket requirements are specified in "Factory-Applied Jackets" Article.
3. Pipe insulation shall be fabricated according to the requirements of ASTM C1639 “Standard Specification for Fabrication of Cellular Glass Pipe and Tubing Insulation”.
4. Thermal Conductivity: 0.29 Btu-in/hr-ft^2-°F at 75°F.
5. Compressive Strength: 90 psi.
6. Density: 7.5 lb/ft3.
7. The insulation may be fabricated in half, curved sidewall, or segmented, depending on the operating conditions.
8. Bore Coating shall be Hydrocal B-11 or equal gypsum cement, manufactured by U.S. Gypsum Corporation.
9. Insulation Accessories:
   a. Mastic: PITTCOTE 300 Finish, asphalt cutback mastic.
   b. Reinforcing Fabric: PC Fabric 79 open mesh polyester fabric with a 6 x 5.5 mesh/inch configuration.
   c. Sealant: PITTSEAL 444N sealant, a non-setting butyl sealant as supplied by Pittsburgh Corning.
   d. Securements: Aluminum bands, ASTM B 209, 0.020-inch thick, 3/4 inch wide.

F. Flexible Elastomeric Insulation:
1. Products: Subject to compliance with requirements, provide one of the following:
   a. Armacell LLC Armaflex.

b. Aeroflex USA, Inc. Aerocel.
c. K-Flex USA Insul-sheet.

2. Closed-cell. Comply with ASTM C 534, Type I for tubular materials.
3. Inorganic, incombustible, foamed or cellulated glass with annealed, rigid, hermetically sealed cells. Factory-applied jacket requirements are specified in "Factory-Applied Jackets" Article.
4. Pipe insulation shall be fabricated according to the requirements of ASTM C1639 “Standard Specification for Fabrication of Cellular Glass Pipe and Tubing Insulation”.
5. Thermal Conductivity: 0.25 Btu-in/hr-ft^2-°F at 75°F.
6. Short runs of pipe or valves and fittings where it is impractical to install tubing insulation shall be insulated with two layers of 1/4” elastomeric foam tape.

2.2 ADHESIVES

A. Materials shall be compatible with insulation materials, jackets, and substrates and for bonding insulation to itself and to surfaces to be insulated unless otherwise indicated. Adhesives shall contain no flammable solvents if that option is available.

B. Cellular-Glass Adhesive: Solvent-based resin adhesive, with a service temperature range of minus 75 to plus 200 deg F.
1. Products: Subject to compliance with requirements, provide one of the following:
a. Design Polymerics
b. Foster Products Corporation
2. For indoor applications use adhesive that has a VOC content of 50 g/L or less when calculated according to 40 CFR 59, Subpart D (EPA Method 24).

C. Flexible Elastomeric Adhesive: Comply with MIL-A-24179A, Type II, Class I.
1. Products: Subject to compliance with requirements, provide one of the following:
a. Aeroflex USA Inc.; Aeroseal.
b. Armacell LCC; 520 BLV Adhesive.
c. Foster Products Corporation, H. B. Fuller Company; 85-75.
d. RBX Corporation; Rubatex Contact Adhesive.
2. For indoor applications use adhesive that has a VOC content of 50 g/L or less when calculated according to 40 CFR 59, Subpart D (EPA Method 24).

D. Mineral-Fiber Adhesive: Comply with MIL-A-3316C, Class 2, Grade A.
1. Products: Subject to compliance with requirements, provide one of the following:
a. Design Polymerics DP 2590-CA
b. ITW TACC, Division of Illinois Tool Works; SP80, T1080
c. Marathon Industries, Inc.
2. For indoor applications use adhesive that has a VOC content of 80 g/L or less when calculated according to 40 CFR 59, Subpart D (EPA Method 24).

E. ASJ Adhesive, and FSK Jacket Adhesive: Comply with MIL-A-3316C, Class 2, Grade A for bonding insulation jacket lap seams and joints.
1. Products: Subject to compliance with requirements, provide one of the following:
a. Design Polymerics DD2590-CA.
b. ITW TACC, Division of Illinois Tool Works; SP80, T1080
c. Marathon Industries, Inc.

2. For indoor applications use adhesive that has a VOC content of 50 g/L or less when calculated according to 40 CFR 59, Subpart D (EPA Method 24).

F. PVC Jacket Adhesive: Compatible with PVC jacket.
1. Products: Subject to compliance with requirements, provide one of the following:
a. Dow Chemical Company (The); 739, Dow Silicone.
b. Johns-Manville; Zeston Perma-Weld, CEEL-TITE Solvent Welding Adhesive.
c. P.I.C. Plastics, Inc.; Welding Adhesive.
d. Speedline Corporation; Speedline Vinyl Adhesive.
2. For indoor applications use adhesive that has a VOC content of 50 g/L or less when calculated according to 40 CFR 59, Subpart D (EPA Method 24).

2.3 MASTICS

A. Materials shall water based and be compatible with insulation materials, jackets, and substrates; comply with MIL-PRF-19565C, Type II.
1. For indoor applications, use mastics that have a VOC content of 40 g/L or less when calculated according to 40 CFR 59, Subpart D (EPA Method 24).

B. Vapor-Barrier Mastic: Water based; suitable for indoor and outdoor use on below ambient services.
1. Products: Subject to compliance with requirements, provide one of the following:
a. Childers Products, Division of ITW; CP-35.
b. Design Polymerics 3040 with zero VOC's.
c. Foster Products Corporation, H. B. Fuller Company; 30-90.
2. Water-Vapor Permeance: ASTM E 96, Procedure B, 0.013 perm at 43-mil dry film thickness.
3. Service Temperature Range: Minus 20 to plus 180 deg F.
4. Solids Content: ASTM D 1644, 58 percent by volume and 70 percent by weight.
5. Color: White.

C. Breather Mastic: Water based; suitable for indoor and outdoor use on above ambient services.
1. Products: Subject to compliance with requirements, provide one of the following:
a. Childers Products, Division of ITW; CP-10.
b. Foster Products Corporation, H. B. Fuller Company; 35-00.
c. ITW TACC, Division of Illinois Tool Works; CB-05/15.
2. Water-Vapor Permeance: ASTM F 1249, 1.8 perms at 0.0625-inch dry film thickness.
3. Service Temperature Range: Minus 20 to plus 180 deg F.
4. Solids Content: 60 percent by volume and 66 percent by weight.
5. Color: White.

2.4 SEALANTS

A. Joint Sealants:
1. Joint Sealants for Cellular-Glass Products: Subject to compliance with requirements, provide one of the following:
a. Childers Products, Division of ITW; CP-76.
b. Foster Products Corporation, H. B. Fuller Company; 30-45.

c. Marathon Industries, Inc.; 405.
2. Materials shall be compatible with insulation materials, jackets, and substrates.
3. Permanently flexible, elastomeric sealant.
4. Service Temperature Range: Minus 100 to plus 300 deg F.
5. Color: White or gray.
6. For indoor applications, sealants shall have a VOC content of 420 g/L or less when calculated according to 40 CFR 59, Subpart D (EPA Method 24).

B. FSK and Metal Jacket Flashing Sealants:
1. Products: Subject to compliance with requirements, provide one of the following:
a. Childers Products, Division of ITW; CP-76-8.
b. Foster Products Corporation, H. B. Fuller Company; 95-44.
c. Marathon Industries, Inc.; 405.
2. Materials shall be compatible with insulation materials, jackets, and substrates.
3. Fire- and water-resistant, flexible, elastomeric sealant.
4. Service Temperature Range: Minus 40 to plus 250 deg F.
5. Color: Aluminum.
6. For indoor applications use sealants that have a VOC content of 420 g/L or less when calculated according to 40 CFR 59, Subpart D (EPA Method 24).

C. ASJ Flashing Sealants:
1. Products: Subject to compliance with requirements, provide one of the following:
a. Childers Products, Division of ITW; CP-76.
b. Or equal.
2. Materials shall be compatible with insulation materials, jackets, and substrates.
3. Fire- and water-resistant, flexible, elastomeric sealant.
4. Service Temperature Range: Minus 40 to plus 250 deg F.
5. Color: White.
6. For indoor applications and use sealants that have a VOC content of 420 g/L or less when calculated according to 40 CFR 59, Subpart D (EPA Method 24).

2.5 FACTORY-APPLIED JACKETS

A. When factory-applied jackets are indicated, comply with the following:
1. ASJ: White, kraft-paper, fiberglass-reinforced scrim with aluminum-foil backing; complying with ASTM C 1136, Type I.
2. ASJ-SSL: ASJ with self-sealing, pressure-sensitive, acrylic-based adhesive covered by a removable protective strip; complying with ASTM C 1136, Type I.
3. FSK Jacket: Aluminum-foil, fiberglass-reinforced scrim with kraft-paper backing; complying with ASTM C 1136, Type II.

2.6 FIELD-APPLIED JACKETS

A. Field-applied jackets shall comply with ASTM C 921, Type I, unless otherwise indicated.

B. PVC Jacket: High-impact-resistant, UV-resistant PVC complying with ASTM D1784, Class 16354-C; thickness as scheduled; roll stock ready for shop or field cutting and forming. Thickness is indicated in field-applied jacket schedules.

1. Products: Subject to compliance with requirements, provide one of the following:
   a. Johns Manville; Zeston.
   b. P.I.C. Plastics, Inc.; FG Series.
   c. Proto Corporation; LoSmoke.
   d. Speedline Corporation; SmokeSafe.
2. Adhesive: As recommended by jacket material manufacturer.
3. PVC Jacket Color:
   a. Chilled-Water Piping:
      1) Chilled Water Supply: Dark Blue
      2) Chilled Water Return: Light Blue
   b. Heating Hot Water Piping:
      1) Heating Hot Water Supply: Dark Red
      2) Heating Hot Water Return: Light Red
4. Factory-fabricated fitting covers to match jacket if available; otherwise, field fabricate.
   a. Shapes: 45- and 90-degree, short- and long-radius elbows, tees, valves, flanges, unions, reducers, end caps, soil-pipe hubs, traps, mechanical joints, and P-trap and supply covers for lavatories.

C. Moisture Barrier Jacket:
1. Manufacturer: Pittsburg Corning PITTWRAP or approved equal.
2. 125 mil thick heat-seal multi-ply laminate consisting of three layers of a polymer-modified bituminous compound separated by glass reinforcement and aluminum foil.

D. Aluminum Jacket: Comply with ASTM B 209, Alloy 3003, 3005, 3105, or 5005, Temper H-14.
1. Products: Subject to compliance with requirements, provide one of the following:
   a. Childers Products, Division of ITW; Metal Jacketing Systems.
   b. PABCO Metals Corporation; Surefit.
   c. RPR Products, Inc.; Insul-Mate.
2. Factory cut and rolled to size.
3. Finish and thickness are indicated in field-applied jacket schedules.
4. Moisture Barrier for Indoor Applications: 3-mil- thick, heat-bonded polyethylene and kraft paper.
5. Moisture Barrier for Outdoor Applications: 3-mil- thick, heat-bonded polyethylene and 40 pound kraft paper.
6. Factory-Fabricated Fitting Covers:
   a. Same material, finish, and thickness as jacket.
   b. Preformed 2-piece or gore, 45- and 90-degree, short- and long-radius elbows.
   c. Tee covers.
   d. Flange and union covers.
   e. End caps.
   f. Beveled collars.
   g. Valve covers.
   h. Field fabricate fitting covers only if factory-fabricated fitting covers are not available.

2.7 REMOVABLE INSULATION JACKETS

A. Manufacturers:
1. ThermaXX LLC.

2. INSULTECH.
3. Firwin.

B. Insulation:
1. Glass mat, type E needled fiber, 1" at 11.3 LB/CF.
2. Maximum Use Temperature 400 deg F.

C. Jacket:
1. Hot Side
   a. PTFE Fiberglass Composite Jacketing, 16.5 oz/sq. yd. minimum
   b. Estimation of Maximum Use Temperature 550 deg F.
2. Cold Side
   a. PTFE Fiberglass Composite Jacketing, 16.5 oz/sq. yd. minimum
   b. Estimation of Maximum Use Temperature 600 deg F.

D. Thread:
1. Does not decompose below 800 deg F.
2. Does not melt.
3. Diameter: 0.0114
4. Break Point: 35 Lbs.

E. Construction:
1. Double sewn lock stitch with a minimum 4 to 6 stitches per inch. Jackets shall be sewn with two (2) parallel rows of stitching. The thread must be able to withstand the skin temperatures without degradation.
2. Hog rings, staples, and wire are not are not acceptable methods of closure.
3. No raw cut jacket edges shall be exposed.
4. Jackets shall be fastened using hook and loop (Velcro) straps and 1” slide buckles.
5. Provide a permanently attached aluminum or stainless-steel nameplate on each jacket to identify its location, size, and tag number.
6. Provide a stainless steel or brass grommet at the low point of each jacket, in wet areas for moisture drain (on horizontal jackets as required).
7. The insulation shall be designed to minimize the convection current in the space between the hot metal surface and the inner layer of insulation. To this end, during jacket fabrication, the layers of insulating mat shall be placed in an overlapping pattern.
8. All jacket pieces which match mating seams must include an extended 2" flap constructed from the exterior fabric and shall be secured using hook & loop closure (Velcro) parallel to the seam.
9. Insulation must be sewn as integral part of the jacket to prevent shifting of the insulation.

2.8 TAPES

A. ASJ Tape: White vapor-retarder tape matching factory-applied jacket with acrylic adhesive, complying with ASTM C 1136.
1. Products: Subject to compliance with requirements, provide one of the following:
   a. ABI, Ideal Tape Division; 428 AWF ASJ.
   b. Avery Dennison Corporation, Specialty Tapes Division; Fasson 0836.
   c. Compac Corporation; 104 and 105.
   d. Venture Tape; 1540 CW Plus, 1542 CW Plus, and 1542 CW Plus/SQ.

2. Width: 3 inches.
3. Thickness: 11.5 mils
4. Adhesion: 90 ounces force/inch in width.
5. Elongation: 2 percent.
6. Tensile Strength: 40 lbf/inch in width.
7. ASJ Tape Disks and Squares: Precut disks or squares of ASJ tape.

B. FSK Tape: Foil-face, vapor-retarder tape matching factory-applied jacket with acrylic adhesive; complying with ASTM C 1136.
1. Products: Subject to compliance with requirements, provide one of the following:
   a. ABI, Ideal Tape Division; 491 AWF FSK.
   b. Avery Dennison Corporation, Specialty Tapes Division; Fasson 0827.
   c. Compac Corporation; 110 and 111.
   d. Venture Tape; 1525 CW NT, 1528 CW, and 1528 CW/SQ.
2. Width: 3 inches.
3. Thickness: 6.5 mils.
4. Adhesion: 90 ounces force/inch in width.
5. Elongation: 2 percent.
6. Tensile Strength: 40 lbf/inch in width.
7. FSK Tape Disks and Squares: Precut disks or squares of FSK tape.

C. PVC Tape: White vapor-retarder tape matching field-applied PVC jacket with acrylic adhesive. Suitable for indoor and outdoor applications.
1. Products: Subject to compliance with requirements, provide one of the following:
   a. Avery Dennison Corporation, Specialty Tapes Division; Fasson 0555.
   b. Compac Corp.; 130.
   c. Ideal Tape Co., Inc., an American Biltrite Company; 370 White PVC tape.
   d. Venture Tape; 1506 CW NS.
2. Width: 2 inches.
3. Thickness: 6 mils.
4. Adhesion: 64 ounces force/inch in width.
5. Elongation: 500 percent.
6. Tensile Strength: 18 lbf/inch in width.

D. Aluminum-Foil Tape: Vapor-retarder tape with acrylic adhesive.
1. Products: Subject to compliance with requirements, provide one of the following:
   a. Avery Dennison Corporation, Specialty Tapes Division; Fasson 0800.
   b. Compac Corp.; 120.
   c. Ideal Tape Co., Inc., an American Biltrite Company; 488 AWF.
   d. Venture Tape; 1525 CW, 1528 CW, and 1528 CW/SQ.
2. Width: 2 inches.
3. Thickness: 3.7 mils.
4. Adhesion: 100 ounces force/inch in width.
5. Elongation: 5 percent.
6. Tensile Strength: 34 lbf/inch in width.

2.9 SECUREMENTS

A. Aluminum Bands: ASTM B 209, Alloy 3003, 3005, 3105, or 5005; Temper H-14, 0.020-inch thick, 1/2 inch 3/4 inch wide with closed seal.
   1. Products: Subject to compliance with requirements, available products that may be incorporated into the Work include, but are not limited to, the following]:
      a. ITW Insulation Systems; Gerrard Strapping and Seals.
      b. RPR Products, Inc.; Insul-Mate Strapping, Seals, and Springs.

B. Staples: Outward-clinching insulation staples, nominal 3/4-inch wide, stainless steel or Monel.

C. Wire: 0.062-inch soft-annealed, Monel.
   1. Manufacturers: Subject to compliance with requirements, provide product by:
      a. C & F Wire.
      b. Childers Products.
      c. PABCO Metals Corporation.
      d. RPR Products, Inc.

PART 3 - EXECUTION

3.1 EXAMINATION

A. Examine substrates and conditions for compliance with requirements for installation tolerances and other conditions affecting performance of insulation application.
   1. Verify all inspection and acceptance testing of the piping as required by the specification has been completed and that the piping is ready for installation of insulation.
   2. Verify that surfaces to be insulated are clean and dry.
   3. Proceed with installation only after unsatisfactory conditions have been corrected.
   4. Verify there is adequate clearance to install the pipe insulation in accordance with the operation performance parameters of the specification, such as access to controls, valves and for maintenance and repair.

3.2 PREPARATION

A. Surface Preparation: Clean and dry surfaces to receive insulation. Remove materials that will adversely affect insulation application.

3.3 GENERAL INSTALLATION REQUIREMENTS

A. Insulation shall not be installed until the following have been completed and documentation has been submitted to Owner for approval and record:
   1. Cleaning and flushing
   2. Pressure testing

B. Install insulation materials, accessories, and finishes with smooth, straight, and even surfaces; free of voids throughout the length of piping including fittings, valves, and specialties.

C. Install insulation materials, forms, vapor barriers or retarders, jackets, and thicknesses required for each item of pipe system as specified in insulation system schedules.

D. Install accessories compatible with insulation materials and suitable for the service. Install accessories that do not corrode, soften, or otherwise attack insulation or jacket in either wet or dry state.

E. Install insulation with longitudinal seams at top and bottom of horizontal runs.

F. Install multiple layers of insulation with longitudinal and end seams staggered.

G. Do not weld brackets, clips, or other attachment devices to piping, fittings, and specialties.

H. Keep insulation materials dry during application and finishing.

I. Install insulation with tight longitudinal seams and end joints. Bond seams and joints with adhesive recommended by insulation material manufacturer.

J. Install insulation with least number of joints practical.

K. Install rigid pre-insulated pipe supports to protect from compression of insulation material due to point loads.

L. Provide aluminum sleeves at all pipe support joints, between hanger support and exterior layer of insulating systems, to protect from compression of insulation material due to point loads.

M. Install insulation on piping accessories requiring future reoccuring access and service with factory fabricated insulation covers that are easily removed and reapplied.

N. Where vapor barrier is indicated, seal joints, seams, and penetrations in insulation at hangers, supports, anchors, and other projections with vapor-barrier mastic.
   1. Install insulation continuously through hangers and around anchor attachments.
   2. For insulation application where vapor barriers are indicated, extend insulation on anchor legs from point of attachment to supported item to point of attachment to structure. Taper and seal ends at attachment to structure with vapor-barrier mastic.
   3. Install insert materials and install insulation to tightly join the insert. Seal insulation to insulation inserts with adhesive or sealing compound recommended by insulation material manufacturer.
   4. Cover inserts with jacket material matching adjacent pipe insulation. Install shields over jacket, arranged to protect jacket from tear or puncture by hanger, support, and shield.

O. Apply adhesives, mastics, and sealants at manufacturer's recommended coverage rate and wet and dry film thicknesses.

P. Install insulation with factory-applied jackets as follows:
   1. Draw jacket tight and smooth.
   2. Cover circumferential joints with 3-inch- wide strips, of same material as insulation jacket. Secure strips with adhesive and outward clinching staples along both edges of strip, spaced 4 inches o.c.

3. Overlap jacket longitudinal seams at least 1.5 inches. Install insulation with longitudinal seams at bottom of pipe. Clean and dry surface to receive self-sealing lap. Staple laps with outward clinching staples along edge at 4 inches o.c.
   a. For below-ambient services, apply vapor-barrier mastic over staples.
4. Cover joints and seams with tape, according to insulation material manufacturer's written instructions, to maintain vapor seal.
5. Where vapor barriers are indicated, apply vapor-barrier mastic on seams and joints and at ends adjacent to pipe flanges and fittings.

Q. Cut insulation in a manner to avoid compressing insulation more than 75 percent of its nominal thickness.

R. Finish installation with systems at operating conditions. Repair joint separations and cracking due to thermal movement.

S. Repair damaged insulation facings by applying same facing material over damaged areas. Extend patches at least 4 inches beyond damaged areas. Adhere, staple, and seal patches similar to butt joints.

T. Existing pipe insulation damaged or affected by the work of this contract shall be repaired to comply with these specifications except that materials and thicknesses may match existing unless otherwise directed by the Owner’s Representative.

U. For above-ambient services, do not install insulation to the following:
   1. Vibration-control devices.
   2. Testing agency labels and stamps.
   3. Nameplates and data plates.
   4. Manholes.
   5. Handholes.
   6. Cleanouts.

3.4 PENETRATIONS

A. Insulation Installation at Roof Penetrations: Install insulation continuously through roof penetrations.
   1. Seal penetrations with flashing sealant.
   2. For applications requiring only indoor insulation, terminate insulation above roof surface and seal with joint sealant. For applications requiring indoor and outdoor insulation, install insulation for outdoor applications tightly joined to indoor insulation ends. Seal joint with joint sealant.
   3. Extend jacket of outdoor insulation outside roof flashing at least 2 inches below top of roof flashing.
   4. Seal jacket to roof flashing with flashing sealant.

B. Insulation Installation at Underground Exterior Wall Penetrations:
   1. Terminate insulation with sleeve seal at wall penetration.
   2. Seal terminations with flashing sealant.

C. Insulation Installation at Aboveground Exterior Wall Penetrations: Install insulation continuously through wall penetrations.
   1. Seal penetrations with flashing sealant.
   2. For applications requiring only indoor insulation, terminate insulation inside wall surface and seal with joint sealant. For applications requiring indoor and outdoor insulation, install insulation for outdoor applications tightly joined to indoor insulation ends. Seal joint with joint sealant.
   3. Extend jacket of outdoor insulation outside wall flashing and overlap wall flashing at least 2 inches.
   4. Seal jacket to wall flashing with flashing sealant.

D. Insulation Installation at Interior Wall and Partition Penetrations: Install insulation continuously through walls and partitions.

E. Insulation Installation at Floor Penetrations:
   1. Pipe: Install insulation continuously through floor penetrations.
   2. Seal penetrations through fire-rated assemblies. Comply with requirements in Section 078413 "Penetration Firestopping."

3.5 GENERAL PIPE INSULATION INSTALLATION

A. Insulation Installation on Fittings, Valves, Strainers, Flanges, and Unions:
   1. Install insulation over fittings, valves, strainers, flanges, unions, and other specialties with continuous thermal and vapor-retarder integrity unless otherwise indicated.
   2. Insulate pipe elbows using preformed fitting insulation or mitered fittings made from same material and density as adjacent pipe insulation. Each piece shall be butted tightly against adjoining piece and bonded with adhesive. Fill joints, seams, voids, and irregular surfaces with insulating cement finished to a smooth, hard, and uniform contour that is uniform with adjoining pipe insulation.
   3. Insulate tee fittings with preformed fitting insulation or sectional pipe insulation of same material and thickness as used for adjacent pipe. Cut sectional pipe insulation to fit. Butt each section closely to the next and hold in place with tie wire. Bond pieces with adhesive.
   4. Insulate valves using preformed fitting insulation or sectional pipe insulation of same material, density, and thickness as used for adjacent pipe. Overlap adjoining pipe insulation by not less than two times the thickness of pipe insulation, or one pipe diameter, whichever is thicker. For valves, insulate up to and including the bonnets, valve stuffing-box studs, bolts, and nuts. Fill joints, seams, and irregular surfaces with insulating cement.
   5. Insulate strainers using preformed fitting insulation or sectional pipe insulation of same material, density, and thickness as used for adjacent pipe. Overlap adjoining pipe insulation by not less than two times the thickness of pipe insulation, or one pipe diameter, whichever is thicker. Fill joints, seams, and irregular surfaces with insulating cement. Insulate strainers so strainer basket flange or plug can be easily removed and replaced without damaging the insulation and jacket. Provide a removable reusable insulation cover. For below-ambient services, provide a design that maintains vapor barrier.
   6. Insulate flanges and unions using a section of oversized preformed pipe insulation. Overlap adjoining pipe insulation by not less than two times the thickness of pipe insulation, or one pipe diameter, whichever is thicker.
   7. Cover segmented insulated surfaces with a layer of finishing cement and coat with a mastic. Install vapor-barrier mastic for below-ambient services and a breather mastic for above-

ambient services. Reinforce the mastic with fabric-reinforcing mesh. Trowel the mastic to a smooth and well-shaped contour.

8. For services not specified to receive a field-applied jacket, install fitted PVC cover over elbows, tees, strainers, valves, flanges, and unions. Terminate ends with PVC end caps. Tape PVC covers to adjoining insulation facing using PVC tape.
9. Label the outside insulation jacket of each union with the word "union." Match size and color of pipe labels.

B. Insulate instrument connections for thermometers, pressure gages, pressure temperature taps, test connections, flow meters, sensors, switches, and transmitters on insulated pipes. Shape insulation at these connections by tapering it to and around the connection with insulating cement and finish with finishing cement, mastic, and flashing sealant.

C. Install removable insulation covers at locations indicated. Installation shall conform to the following:
1. Make removable flange and union insulation from sectional pipe insulation of same thickness as that on adjoining pipe. Install same insulation jacket as adjoining pipe insulation.
2. When flange and union covers are made from sectional pipe insulation, extend insulation from flanges or union long at least two times the insulation thickness over adjacent pipe insulation on each side of flange or union. Secure flange cover in place with stainless-steel or aluminum bands. Select band material compatible with insulation and jacket.
3. Construct removable valve insulation covers in same manner as for flanges, except divide the two-part section on the vertical center line of valve body.
4. When covers are made from block insulation, make two halves, each consisting of mitered blocks wired to stainless-steel fabric. Secure this wire frame, with its attached insulation, to flanges with tie wire. Extend insulation at least 2 inches over adjacent pipe insulation on each side of valve. Fill space between flange or union cover and pipe insulation with insulating cement. Finish cover assembly with insulating cement applied in two coats. After first coat is dry, apply and trowel second coat to a smooth finish.
5. Unless a PVC jacket is indicated in field-applied jacket schedules, finish exposed surfaces with a metal jacket.

3.6 INSTALLATION OF MINERAL-FIBER INSULATION

A. Insulation Installation on Straight Pipes and Tubes:
1. Secure each layer of preformed pipe insulation to pipe with wire or bands and tighten bands without deforming insulation materials.
2. Where vapor barriers are indicated, seal longitudinal seams, end joints, and protrusions with vapor-barrier mastic and joint sealant.
3. For insulation with factory-applied jackets on above-ambient surfaces, secure laps with outward-clinched staples at 6 inches o.c.
4. For insulation with factory-applied jackets on below-ambient surfaces, do not staple longitudinal tabs. Instead, secure tabs with additional adhesive as recommended by insulation material manufacturer and seal with vapor-barrier mastic and flashing sealant.
5. On chilled water systems, the butt end of every fourth pipe insulation section, and the ends or raw edges of insulation terminations at equipment connections, fittings and fire stop systems shall be sealed with vapor retarder mastic per NAIMA Guide to Insulation Chilled Water Systems, 2015.

B. Insulation Installation on Pipe Flanges:
   1. Install preformed pipe insulation to outer diameter of pipe flange.
   2. Make width of insulation section same as overall width of flange and bolts, plus twice the thickness of pipe insulation.
   3. Fill voids between inner circumference of flange insulation and outer circumference of adjacent straight pipe segments with mineral-fiber blanket insulation.
   4. Install jacket material with manufacturer's recommended adhesive, overlap seams at least 1 inch, and seal joints with flashing sealant.

C. Insulation Installation on Pipe Fittings and Elbows:
   1. Install preformed sections of same material as straight segments of pipe insulation when available.
   2. When preformed insulation elbows and fittings are not available, install mitered sections of pipe insulation, to a thickness equal to adjoining pipe insulation. Secure insulation materials with wire or bands.

D. Insulation Installation on Valves and Pipe Specialties:
   1. Install preformed sections of same material as straight segments of pipe insulation when available.
   2. When preformed sections are not available, install mitered sections of pipe insulation to valve body.
   3. Arrange insulation to permit access to packing and to allow valve operation without disturbing insulation.
   4. Install insulation to flanges as specified for flange insulation application.

3.7 INSTALLATION OF PHENOLIC INSULATION

A. General Installation Requirements:
   1. Secure single-layer insulation with stainless-steel bands at 12-inch intervals and tighten bands without deforming insulation materials.
   2. Install 2-layer insulation with joints tightly butted and staggered at least 3 inches. Secure inner layer with 0.062-inch wire spaced at 12-inch intervals. Secure outer layer with stainless-steel bands at 12-inch intervals.

B. Insulation Installation on Straight Pipes and Tubes:
   1. Secure each layer of insulation to pipe with wire or bands and tighten bands without deforming insulation materials.
   2. Where vapor barriers are indicated, seal longitudinal seams, end joints, and protrusions with vapor-barrier mastic and joint sealant.
   3. For insulation with factory-applied jackets on above-ambient services, secure laps with outward-clinched staples at 6 inches o.c.
   4. For insulation with factory-applied jackets with vapor retarders on below-ambient services, do not staple longitudinal tabs. Instead, secure tabs with additional adhesive as recommended by insulation material manufacturer and seal with vapor-barrier mastic and flashing sealant.

C. Insulation Installation on Pipe Flanges:
   1. Install preformed pipe insulation to outer diameter of pipe flange.

2. Make width of insulation section same as overall width of flange and bolts, plus twice the thickness of pipe insulation.
3. Fill voids between inner circumference of flange insulation and outer circumference of adjacent straight pipe segments with cut sections of block insulation of same material and thickness as pipe insulation.

D. Insulation Installation on Pipe Fittings and Elbows:
1. Install preformed insulation sections of same material as straight segments of pipe insulation. Secure according to manufacturer's written instructions.

E. Insulation Installation on Valves and Pipe Specialties:
1. Install preformed insulation sections of same material as straight segments of pipe insulation. Secure according to manufacturer's written instructions.
2. Arrange insulation to permit access to packing and to allow valve operation without disturbing insulation.
3. Install insulation to flanges as specified for flange insulation application.

3.8 INSTALLATION OF CELLULAR GLASS INSULATION

A. Follow manufacturer’s recommendations for installation.

B. Cutting of cellular-glass shall be outdoors or in a well ventilated space if indoors in a sealed building.

C. Insulation Installation on Straight Pipes and Tubes:
1. Secure each layer of insulation to pipe with wire or bands and tighten bands without deforming insulation materials.
2. Where vapor barriers are indicated, seal longitudinal seams, end joints, and protrusions with vapor-barrier mastic and joint sealant.
3. For insulation with factory-applied jackets on above ambient services, secure laps with outward clinched staples at 6 inches on center.
4. For insulation with factory-applied jackets on below ambient services, do not staple longitudinal tabs but secure tabs with additional adhesive as recommended by insulation material manufacturer and seal with vapor-barrier mastic and flashing sealant.
5. For insulation in utility trench, provide bands at 12 inches on center to the exterior of the field instated jacketing.

D. Insulation Installation on Pipe Flanges:
1. Install preformed pipe insulation to outer diameter of pipe flange.
2. Make width of insulation section same as overall width of flange and bolts, plus twice the thickness of pipe insulation.
3. Fill voids between inner circumference of flange insulation and outer circumference of adjacent straight pipe segments with cut sections of cellular-glass block insulation of same thickness as pipe insulation.
4. Install jacket material with manufacturer's recommended adhesive, overlap seams at least 1 inch, and seal joints with flashing sealant.

E. Insulation Installation on Pipe Couplings, Fittings and Elbows:

1. Install preformed sections of same material as straight segments of pipe insulation when available. Secure according to manufacturer's written instructions.
2. When preformed sections of insulation are not available, install mitered sections of cellular-glass insulation. Secure insulation materials with wire or bands.

F. Insulation Installation on Valves and Pipe Specialties:
1. Install preformed sections of cellular-glass insulation to valve body.
2. Arrange insulation to permit access to packing and to allow valve operation without disturbing insulation.
3. Install insulation to flanges as specified for flange insulation application.
4. Secure insulation to valves and specialties and seal seams with manufacturer's recommended adhesive to eliminate openings in insulation that allow passage of air to surface being insulated.

3.9 INSTALLATION OF FLEXIBLE ELASTOMERIC INSULATION

A. Seal longitudinal seams and end joints with manufacturer’s recommended adhesive to eliminate openings in insulation that allow passage of air to surface being insulated.

B. Insulation Installation on Pipe Flanges:
1. Install pipe insulation to outer diameter of pipe flange.
2. Make width of insulation section same as overall width of flange and bolts, plus twice the thickness of pipe insulation.
3. Fill voids between inner circumference of flange insulation and outer circumference of adjacent straight pipe segments with cut sections of sheet insulation of same thickness as pipe insulation.
4. Secure insulation to flanges and seal seams with manufacturer's recommended adhesive to eliminate openings in insulation that allow passage of air to surface being insulated.

C. Insulation Installation on Pipe Fittings and Elbows:
1. Install mitered sections of pipe insulation.
2. Secure insulation materials and seal seams with manufacturer's recommended adhesive to eliminate openings in insulation that allow passage of air to surface being insulated.

D. Insulation Installation on Valves and Pipe Specialties:
1. Install preformed valve covers manufactured of same material as pipe insulation when available.
2. When preformed valve covers are not available, install cut sections of pipe and sheet insulation to valve body. Arrange insulation to permit access to packing and to allow valve operation without disturbing insulation.
3. Install insulation to flanges as specified for flange insulation application.
4. Secure insulation to valves and specialties and seal seams with manufacturer's recommended adhesive to eliminate openings in insulation that allow passage of air to surface being insulated.

3.10 THERMAL BLANKET INSTALLATION

A. Apply removable and reusable insulating thermal blankets on systems operating at greater than 180°F, and other water systems as follows:
   1. Valves.
   2. Strainers.
   3. Pumps.
   4. Regulators.
   5. Flow meters.
   6. Flow control, balancing, and instrumentation devices.
   7. Steam Trap assemblies (except the trap, itself, which shall be uninsulated)
   8. Service connection piping at locations that require maintenance, i.e. tube pull and heat exchanger head removal.
   9. HTW anchors, guides, expansion joints and pipe supports.

B. Blanket Overlap: Install blanket with a minimum 2 inches overlap of adjacent insulation, as existing insulation with a minimum of 2 inches overlap. Where blanket cannot overlap existing oversized insulation, blanket shall butt up to existing insulation with a friction closing seam. Open gaps are prohibited. Blanket diameters which are 2 inches larger than existing insulation must be capped to eliminate open air void.

C. Any one piece shall not exceed 40 lbs. in weight.

3.11 FIELD-APPLIED JACKET INSTALLATION

A. Where FSK jackets are indicated, install as follows:
   1. Draw jacket material smooth and tight.
   2. Install lap or joint strips with same material as jacket.
   3. Secure jacket to insulation with manufacturer's recommended adhesive.
   4. Install jacket with 1.5-inch laps at longitudinal seams and 3-inch wide joint strips at end joints.
   5. Seal openings, punctures, and breaks in vapor-retarder jackets and exposed insulation with vapor-barrier mastic.

B. Where PVC jackets are indicated, install as follows:
   1. With 1-inch overlap at longitudinal seams and end joints; for horizontal applications.
   2. Seal with manufacturer's recommended adhesive.
   3. Apply two continuous beads of adhesive to seams and joints, one bead under lap and the finish bead along seam and joint edge.

C. Where metal jackets are indicated, install as follows:
   1. With 2-inch overlap at longitudinal seams and end joints.
   2. Overlap longitudinal seams arranged to shed water.
   3. Seal end joints with weatherproof sealant recommended by insulation manufacturer.
   4. Secure jacket with stainless-steel bands 12 inches o.c. and at end joints.

3.12 FIELD QUALITY CONTROL

A. Perform tests and inspections.

B. All insulation applications will be considered defective Work if sample inspection reveals noncompliance with requirements.

3.13 PIPING INSULATION SCHEDULE, GENERAL

A. Acceptable preformed pipe and tubular insulation materials and thicknesses are identified for each piping system and pipe size range.

3.14 ABOVEGROUND PIPING INSULATION SCHEDULE

A. Chilled Water Supply and Return, Outdoors, 40ºF and above:
   1. NPS 1.25 inch and smaller: Phenolic, pre-formed pipe insulation, 0.5 inch thick.
   2. NPS 1.5 inch and larger: Phenolic, pre-formed pipe insulation, 1 inch thick.

B. Chilled Water Supply and Return, Indoors, 40ºF and above:
   1. NPS 1.25 inch and smaller: Mineral Fiber, pre-formed pipe insulation, 0.5 inch thick.
   2. NPS 1.5 inch and larger: Mineral Fiber, pre-formed pipe insulation, 1 inch thick.

C. Heating Hot Water Supply and Return, 200°F and below:
   1. NPS 1.25 inch and smaller: Mineral Fiber, pre-formed pipe insulation, 1.5 inches thick.
   2. NPS 1.5 inch and larger: Mineral Fiber, pre-formed pipe insulation, 2 inches thick.

D. Refrigerant Piping:
   1. Low Pressure Vapor Line, below 40°F: Flexible elastomeric, 1 inch thick.
   2. Low Pressure Vapor Line, 40°F and above: Flexible elastomeric, 0.5 inch thick.
   3. High Pressure Vapor Line, 141°F to 200°F: Flexible elastomeric, 1.5 inches thick.
   4. High Pressure Vapor Line, 201°F to 250°F: Flexible elastomeric, 2.5 inches thick.
   5. Liquid Line, 140°F and below: Flexible elastomeric, 1 inch thick.

E. Steam and Steam Condensate, 250 Deg and Below:
   1. NPS 3 inch and smaller: Mineral Fiber, pre-formed pipe insulation, 2.5 inches thick.
   2. NPS 4 inch and larger: Mineral Fiber, pre-formed pipe insulation, 3 inches thick.

F. Condensate Drain Piping:
   1. All Pipe Sizes: Flexible elastomeric, 0.5 inch thick.

3.15 INDOOR, FIELD-APPLIED JACKET SCHEDULE

A. Install jacket over insulation material. For insulation with factory-applied jacket, install the field-applied jacket over the factory-applied jacket.

B. Piping, Concealed: None.

C. Piping, Exposed: PVC, Color-Coded by system, 30 mils thick for all indoor applications.

D. Piping, Exposed - Steam and Condensate, Condensate Vent.
   1. Aluminum, Stucco Embossed: 0.020 inch thick.
   2. Smooth aluminum for elbows and fittings is acceptable if not available in stucco embossed.

3.16 OUTDOOR, FIELD-APPLIED JACKET SCHEDULE

A. Install jacket over insulation material. For insulation with factory-applied jacket, install the field-applied jacket over the factory-applied jacket.

B. Piping, Concealed: None.

C. Piping, Exposed: Aluminum, Stucco Embossed, 0.024 inch thick.

END OF SECTION 230719

SECTION 230900- BUILDING AUTOMATION CONTROL SYSTEM

PART 1 - GENERAL

1.1 WORK INCLUDED:

A. GENERAL - Building Management System (BMS) Contractor shall provide and install:
   1. A fully integrated Building Automation System (BAS), incorporating direct digital control (DDC) for energy management, equipment monitoring and control, and subsystems with open communications capabilities as herein specified.
   2. Complete temperature control system to be DDC with electric actuation as specified herein.
   3. All wiring, conduit, panels, and accessories for a complete operational system.
   4. BMS Contractor shall be responsible for all electrical work associated with the BMS. Refer to Division 26 - Electrical for power to control panels.
      a. Perform all wiring in accordance with all local and national codes.
      b. Install all line voltage wiring, concealed or exposed, in conduit in accordance with Division 26 - Electrical, NEC and local building code.
      c. Surge transient protection shall be incorporated in design of system to protect electrical components in all DDC Controllers and operator's workstations.
      d. All low voltage electrical control wiring throughout the building when exposed or in an un-accessible location shall be run in conduit in accordance with Division 26 - Electrical, local building code and the NEC. Low voltage wiring throughout the building, when in concealed accessible locations, can be run using plenum rated wire and supported from duct work or ceiling supports, or run in existing cable tray.
   5. All flow switches and alarms, as required.
   6. Provide open communications system. The system shall be an open architecture with the capabilities to support a multi-vendor environment. To accomplish this effectively, system shall be capable of utilizing standard protocols as follows as well as be able to integrate third-party systems via existing vendor protocols.
   7. System shall be capable of high speed Ethernet communication using TCP/IP protocol.
   8. System shall be capable of BACnet communication according to ANSI/ASHRAE 135-2004.
   9. System shall be capable of OPC server communications according to OPC Data Access 2.0 and Alarms and Events 1.0.
   10. The system shall be capable of supporting both standard and vendor specific protocols to integrate a wide variety of third-party devices and legacy systems.
   11. The system shall be capable of supporting wireless field level networks and sensor communications using a mesh topology and IEEE 802.15.4 network.
   12. Depending on the needs of a particular project, may use the existing Operator Workstations in the Central Plant, or may require one or more new Operator Workstations on site. Additional site licenses may also be required. Contractor shall coordinate with the Owner's Representative to determine the needs of the project.
   13. Provide system graphics for each controlled device and/or integrated systems as required by the owner. Origin of information shall be transparent to the operator and shall be controlled, displayed, trended, etc. as if the points were hardwired to the BMS.

14. Stand-alone Application Specific Controllers (ASCs) for terminal equipment (, fan coil units, heat pumps, AC units, fume hoods, etc).

B. GENERAL PRODUCT DESCRIPTION

1. The installation of the control system shall be performed under the direct supervision of the controls manufacturer with the shop drawings, flow diagrams, bill of materials, component designation, or identification number and sequence of operation all bearing the name of the manufacturer. The installing manufacturer shall certify in writing, that the shop drawings have been prepared by the equipment manufacturer and that the equipment manufacturer has supervised their installation. In addition, the equipment manufacturer shall certify, in writing, that the shop drawings were prepared by their company and that all temperature control equipment was installed under their direct supervision.
2. All materials and equipment used shall be standard components, regularly manufactured for this and/or other systems and not custom designed specially for this project.
3. The system shall be scalable in nature and shall permit expansion of both capacity and functionality through the addition of sensors, actuators, DDC Controllers, and operator devices.
4. System architectural design shall eliminate dependence upon any single device for alarm reporting and control execution. Each DDC Controller shall operate independently by performing its own specified control, alarm management, operator I/O, and data collection. The failure of any single component or network connection shall not interrupt the execution of any control strategy, reporting, alarming and trending function, or any function at any operator interface device.
5. DDC Controllers shall be able to access any data from, or send control commands and alarm reports directly to, any other DDC Controller or combination of controllers on the network without dependence upon a central or intermediate processing device. DDC Controllers shall also be able to send alarm to multiple operator workstations without dependence upon a central or intermediate processing device.
6. DDC Controllers shall be able to assign password access and control priorities to each point individually. The logon password (at any PC workstation or portable operator terminal) shall enable the operator to monitor, adjust or control only the points that the operator is authorized for. All other points shall not be displayed at the PC workstation or portable terminal. (e.g. all base building and all tenant points shall be accessible to any base building operators, but only certain base building and tenant points shall be accessible to tenant building operators). Passwords and priority levels for every point shall be fully programmable and adjustable.

1.2 PRODUCTS FURNISHED BUT NOT INSTALLED UNDER THIS SECTION

A. Refrigerant Piping:

1. Pressure and Temperature Sensor Wells and Sockets

B. Duct-work Accessories:

1. Air-flow Stations in ductwork. Air flow stations mounted in AHU’s or fans are supplied and mounted by unit or fan manufacturer.
2. VVT(Variable Volume & Temprature) Unit Controls

1.3 PRODUCTS INSTALLED BUT NOT INSTALLED UNDER THIS SECTION

A. Refrigeration Equipment:
   1. Refrigerant Leak Detection System

B. Packaged Rooftop Air Handling Equipment:
   1. Thermostats
   2. Duct Static Pressure Sensors

1.4 PRODUCTS INTEGRATED BUT NOT FURNISHED OR INSTALLED UNDER THIS SECTION

A. Refrigeration Equipment:
   1. Chiller Controls

B. Variable Frequency Drives:

C. BACnet System
   1. Server
   2. Client

1.5 RELATED SECTIONS

A. The General Conditions of the Contract, Supplementary Conditions, and General Requirements are part of this specification and shall be used in conjunction with this section as part of the contract documents.

1.6 APPROVED CONTROL SYSTEM CONTRACTORS AND MANAGERS

A. The following are the approved Control System Contractors and Manufacturers:
   1. Carrier. – Product Line: i-Vu System.
   2. System must match existing using police station police stations tandards as dictated by this specification. Gateway, integrator, or “blackbox” communications interfaces are not acceptable. All functionality of the i-Vu shall be provided at new and existing workstations including but not limited to: trending, archiving, custom reporting, system profiler, programming scheduling etc.
   3. Acceptable direct factory branch: P PLC Heating & Air Conditioning 5802 Woodmere Dr. Bakersfield, CA 93313 (661) 805-8313.

1.7 QUALITY ASSURANCE

A. The BAS system shall be designed and installed, commissioned and serviced by factory trained personnel. BMS contractor shall have an in-place support facility within 250 miles of the site with technical staff, spare parts inventory and necessary test and diagnostic equipment. The B.M.S. contractor shall provide full time, experienced project manager for this work, responsible for direct supervision of the design, installation, start up and commissioning of the

B.M.S. The PM should be available by cell phone during normal working hours and on-site when directed for related meetings and coordination. The bidder shall be regularly engaged in the installation and maintenance of BMS systems and shall have a minimum of twenty (20) years of demonstrated technical expertise and experience in the installation and maintenance of B.M.S. systems similar in size and complexity to this project in the greater Los Angeles/Southern California area.

B. The BMS contractor shall maintain an established service organization consisting of factory trained service personnel and provide a list of 10 projects, similar in size and scope to this project, completed within the last five years.

C. Materials and equipment shall be the catalogued products of manufacturers regularly engaged in production and installation of automatic temperature control systems and shall be manufacturer's latest standard design that complies with the specification requirements.

D. All BAS peer-to-peer network controllers, central system controllers, and local user displays shall be UL Listed under Standard UL 916, category PAZX; Standard ULC C100, category UUKL7; and under Standard UL 864, categories UUKL, UDTZ, and QVAX and be so listed at the time of bid. All floor level controllers shall comply, at a minimum, with UL Standard UL 916 category PAZX; Standard UL 864, categories UDTZ, and QVAX and be so listed at the time of Bid.

E. The BAS peer-to-peer network controllers and local user display shall also comply with the European Electromagnetic Compatibility (EMC) Framework, and bear the C-Tic Mark to show compliance. The purpose of the regulation is to minimize electromagnetic interference between electronic products, which may diminish the performance of electrical products or disrupt essential communications.

F. DDC peer-to-peer controllers shall be compliant with the European EMC Directive, Standards EN 50081-2 and EN 50082-2, at the Industrial Levels. Additionally the equipment shall be compliant with the European LVD Directive and bear the CE mark in order to show compliance to both directives.

G. All electronic equipment shall conform to the requirements of FCC Regulation, Part 15, Governing Radio Frequency Electromagnetic Interference and be so labeled.

H. All wireless devices, if used, shall conform to:
   1. The requirements of Title 47 of the Code of Federal Regulations, FCC Part 15, governing radio frequency intentional radiating devices and be issued a FCC user identification and be so labeled.

I. The manufacturer of the building automation system shall provide documentation supporting compliance with ISO-9002 (Model for Quality Assurance in Production, Installation, and Servicing) and ISO-14001 (The application of well-accepted business management principles to the environment). The intent of this specification requirement is to ensure that the products from the manufacturer are delivered through a Quality System and Framework that will assure consistency in the products delivered for this project.

J. This system shall have a documented history of compatibility by design for a minimum of 15 years. Future compatibility shall be supported for no less than 10 years. Compatibility shall be

defined as the ability to upgrade existing field panels to current level of technology, and extend new field panels on a previously installed network. Compatibility shall be defined as the ability for any existing field panel microprocessor to be connected and directly communicate with new field panels without bridges, routers or protocol converters.

1.8 CODES AND STANDARDS

A. Work, materials, and equipment shall comply with the most restrictive of local, state, and federal authorities' codes and ordinances or these plans and specifications. As a minimum, the installation shall comply with current editions in effect 30 days prior to receipt of bids of the following codes:
   1. National Electric Code (NEC)
   2. Uniform Building Code (UBC)
      a. Section 710.5, Wiring in Plenums
      b. Section 1106, Refrigeration Machinery Rooms
      c. Section 1107, Refrigeration Machinery Room Ventilation
      d. Section 1108, Refrigeration Machinery Room Equipment and Controls
   3. Uniform Mechanical Code (UMC)
   4. ANSI/ASHRAE Standard 135- 2004, BACnet--A Data Communication Protocol for Building Automation and Control Networks

1.9 SYSTEM PERFORMANCE

A. Performance Standards. System shall conform to the following minimum standards over network connections. Systems shall be tested using manufacturer's recommended hardware and software for operator workstation (server and browser for web-based systems).
   1. Program Execution Frequency. Custom and standard applications shall be capable of running as often as once every 5 sec. Select execution times consistent with the mechanical process under control.
   2. Performance. Programmable controllers shall be able to completely execute DDC control loops at a frequency adjustable down to once per sec. Select execution times consistent with the mechanical process under control

1.10 SUBMITTALS

A. Product Submittal Requirements. Meet requirements of Section 25 03 00 on Shop Drawings, Product Data, and Samples. Provide four copies of shop drawings and other submittals on hardware, software, and equipment to be installed or furnished. Begin no work until submittals have been approved for conformity with design intent. Provide drawings as AutoCAD 2004 (or newer) compatible files on optical disk (file format: .dwg, .dxf, .vsd, or comparable) or hard copies on 11" x 17" prints of each drawing. When manufacturer's cutsheets apply to a product series rather than a specific product, clearly indicate applicable data by highlighting or by other means. Clearly reference covered specification and drawing on each submittal. General catalogs shall not be accepted as cut sheets to fulfill submittal requirements. Select and show submittal quantities appropriate to scope of work.

B. Provide submittals within 12 weeks of contract award.

C. Submittal data shall consist of the following:
   1. Direct Digital Control System Hardware:
      a. Complete bill of materials indicating quantity, manufacturer, model number, and relevant technical data of equipment to be used.
      b. Manufacturer's description and technical data, such as product specification sheets, installation and maintenance instructions for items listed below and for relevant items not listed below:
      c. Direct Digital Controllers (controller panels)
      d. Transducers and transmitters
      e. Sensors (including accuracy data)
      f. Valves
      g. Dampers
      h. Relays and Switches
      i. Control Panels
      j. Power Supplies
      k. Operator Interface Equipment including workstations, portable laptops, monitors, and printers
      l. Wiring diagrams and layouts for each control panel. Show all termination numbers.
      m. Floor plan schematic diagrams indicating control panel and space temperature sensor locations.
   2. Central System Hardware and Software:
      a. Complete bill of material indicating quantity, manufacturer, model number, and relevant technical data of equipment used.
      b. Manufacturer's description and technical data such as product specifications for items listed below and for relevant items furnished under this contract not listed below:
      c. Central Processing Unit (CPU)
      d. Monitors
      e. Keyboards
      f. Power Supply
      g. Battery Backup
      h. Interface Equipment Between CPU and Control Panels
      i. Operating System Software
      j. Operator Interface Software
      k. Color Graphic Software
      l. Third-Party Software
      m. Alarm and network printers
      n. Schematic diagrams of all control, communication, and power wiring for central system installation. Show interface wiring to control system.
      o. Provide a list of BMS point naming convention. Indicate the format, structure and standards of typical point names. The naming convention shall follow the "Building_Floor_Equipment_Function" format. Provide a list of point names for typical equipment and functions with specific examples.
   3. Controlled Systems:
      a. Riser diagrams showing control network layout, communication protocol, and wire types.
      b. Schematic diagram of each controlled system. Label control points with point names. Graphically show locations of control elements.

c. Schematic wiring diagram of each controlled system. Label control elements and terminals. Where a control element is also shown on control system schematic use the same name.
d. Instrumentation list for each controlled system. List control system element in a table. Show element name, type of device, manufacturer, model number, and product data sheet number.
e. Complete description of control system operation including sequences of operation. Include and reference schematic diagram of controlled system.
f. Point list for each system controller including both inputs and outputs (I/O), point numbers, controlled device associated with each I/O point, and location of I/O device.

4. Description of process, report formats and checklists to be used in Part 3: "Control System Demonstration and Acceptance."
5. Contractor shall submit documentation in the following phased delivery schedule:
   a. Valve and damper schedules
   b. Point Naming Convention
   c. Sample Graphics
   d. System schematics, including:
   e. System Riser Diagrams
   f. Sequence of Operations
   g. Mechanical Control Schematics
   h. Electrical Wiring Diagrams
   i. Control Panel Layouts
   j. Product Specification Sheets
   k. As-Built drawings

D. Project Record Documents: Submit three copies of record (as-built) documents upon completion of installation. Submittal shall consist of:
1. Project Record Drawings. As-built versions of the submittal shop drawings provided as AutoCAD 2004 (or newer) compatible files on optical media and as 11" x 17" prints.
2. Testing and Commissioning Reports and Checklists. Completed versions of reports, checklists, and trend logs used to meet requirements of Part 3: "Control System Demonstration and Acceptance."
3. Operation and Maintenance (O & M) Manual.
   a. As-built versions of the submittal product data.
   b. Names, addresses, and 24-hour telephone numbers of installing contractors and service representatives for equipment and control systems.
   c. Operator's Manual with procedures for operating control systems, logging on and off, handling alarms, producing point reports, trending data, overriding computer control, and changing set points and variables.
   d. Programming manual or set of manuals with description of programming language and of statements for algorithms and calculations used, of point database creation and modification, of program creation and modification, and of editor use.
   e. Engineering, installation, and maintenance manual or set of manuals that explains how to design and install new points, panels, and other hardware; how to perform preventive maintenance and calibration; how to debug hardware problems; and how to repair or replace hardware.
   f. Documentation of all programs created using custom programming language, including set points, tuning parameters, and object database.

g. Graphic files, programs, and database on magnetic or optical media.
h. Complete original-issue documentation, installation, and maintenance information for furnished third-party hardware, including computer equipment and sensors.
i. Complete original original-issue copies of furnished software, including operating systems, custom programming language, operator workstation software, and graphics software.
j. Licenses, guarantees, and warranty documents for equipment and systems.

E. Training Materials. Provide course outline and manuals at least four weeks before training.

1.11 WARRANTY

A. Warrant labor and materials for specified control system free from defects for a period of 12 months after final acceptance. Failures on control systems that include all computer equipment, transmission equipment and all sensors and control devices during warranty period shall be adjusted, repaired, or replaced at no additional cost or reduction in service to Owner. Respond during normal business hours within 24 hours of Owner's warranty service request.

B. Work shall have a single warranty date, even if Owner receives beneficial use due to early system start-up. If specified work is split into multiple contracts or a multi-phase contract, each contract or phase shall have a separate warranty start date and period.

C. If Engineer determines that equipment and systems operate satisfactorily at the end of final start-up, testing, and commissioning phase, Engineer will certify in writing that control system operation has been tested and accepted in accordance with the terms of this specification. Date of acceptance shall begin warranty period.

D. Provide updates to operator workstation software, project-specific software, graphic software, database software, and firmware that resolve Contractor identified software deficiencies at no charge during warranty period. If available, Owner can purchase in-warranty service agreement to receive upgrades for functional enhancements associated with the above-mentioned items. Do not install updates or upgrades without Owner's written authorization.

E. Exception:
1. Contractor shall not be required to warrant reused devices, except those that have been rebuilt or repaired. Installation labor and materials shall be warranted. Demonstrate operable condition of reused devices at time of Engineer's acceptance.
2. Contractor shall not be required to warrant systems, equipment and devices or software if the damages and/or failures were caused by lack of training, unauthorized use, negligence or deliberate action of other parties, or job site conditions.

PART 2 - PRODUCTS

2.1 MATERIALS:

A. All products used in this project installation shall be new and currently manufactured and shall have been applied in similar installations. Do not use this installation as a product test site

unless explicitly approved in writing by Owner or Owner's representative. Spare parts shall be available for at least five years after completion of this contract.

2.2 COMMUNICATION:

A. The design of the BMS shall support networking of operator workstations and Building Controllers. The network architecture shall consist of two levels, an Ethernet based primary network for all operator workstations, servers, and primary DDC controllers along with secondary Floor Level Networks (FLN) for terminal equipment application specific controllers. The Ethernet network will use the police station backbone whenever possible. Contractor will coordinate with the police station IT personnel to locate and identify proper connections.
   1. Ethernet connections will use a police station standard 3 port faceplate, with two ports configured and enabled. One shall be for the Management Level Network, and shall be connected to the field panel. The second port shall be for connection of a laptop computer for field panel operations and troubleshooting. Contractor shall coordinate with police station IT for assignment of static IP addresses.

B. Access to system data shall not be restricted by the hardware configuration of the building management system. The hardware configuration of the BMS network shall be totally transparent to the user when accessing data or developing control programs.

C. Operator Workstation Communication:
   1. All color graphic operator workstations shall reside on the Ethernet network and the consoles shall be set up in a client/server configuration.
   2. The servers will act as the central database for system graphics and databases to provide consistency throughout all system workstations.
   3. The network shall allow concurrent use of multiple BMS software site licenses.
      a. Management Level Network Communication (MLN)
      b. All PCs shall simultaneously direct connect to the Ethernet Management Level Network without the use of an interposing device.
      c. Operator Workstation shall be capable of simultaneous direct connection and communication with BACnet/IP, OPC and TCP/IP corporate level networks without the use of interposing devices.
      d. The Management Level Network shall not impose a maximum constraint on the number of operator workstations.
      e. Any controller residing on the primary building level networks shall connect to Ethernet network without the use of a PC or a gateway with a hard drive.
      f. Any PC on the Management Level Network shall have transparent communication with controllers on the building level networks connected via Ethernet.
      g. Any break in Ethernet communication from the PC to the controllers on the building level networks shall result in a notification at the PC.
      h. The standard client and server workstations on the Management Level Network shall reside on industry standard Ethernet utilizing standard TCP/IP, IEEE 802.3.
      i. System software applications will run as a service to allow communication with Primary Network Controllers without the need for user log in. Closing the application or logging off shall not prevent the processing of alarms, network status, panel failures, and trend information.

j. Any break in Ethernet communication between the standard client and server workstations on the Management Level Network shall result in a notification at each workstation.
k. Access to the system database shall be available from any standard client workstation on the Management Level Network.
l. Primary Network - Panel to Panel Communication:

D. All Building Controllers shall directly reside on the primary BACnet/IP Ethernet network such that communications may be executed directly between Building Controllers, directly between server and Building Controllers on a peer-to-peer basis.

E. Systems that operate via polled response or other types of protocols that rely on a central processor, file server, or similar device to manage panel-to-panel or device-to-device communications shall not be acceptable.

F. All operator interfaces shall have the ability to access all point status and application report data or execute control functions for any and all other devices. Access to data shall be based upon logical identification of building equipment. No hardware or software limits shall be imposed on the number of devices with global access to the network data.

G. The primary network shall use BACnet/IP over Ethernet. All devices must:
1. Auto-sense 10/100 Mbps networks.
2. Be configured with a Fixed IP Address.
3. Resolve Name to IP Addresses for devices using a Domain Name Service (DNS) Server on the Ethernet network.
4. Allow MMI access to an individual Primary Network Controller using industry standard Telnet software to view and edit entire Primary Network.
5. The primary network shall provide the following minimum performance:
a. Provide high-speed data transfer rates for alarm reporting, report generation from multiple controllers and upload/download efficiency between network devices. System performance shall insure that an alarm occurring at any Building Controller is displayed at any PC workstations, all Building controllers, and other alarm printers within 15 seconds.
b. Message and alarm buffering to prevent information from being lost.
c. Error detection, correction, and re-transmission to guarantee data integrity.
d. Synchronization of real-time clocks between Building Controllers, including automatic daylight savings time corrections.
e. The primary network shall allow the Building Controllers to access any data from, or send control commands and alarm reports directly to, any other Building Controller or combination of controllers on the network without dependence upon a central or intermediate processing device. Building Controllers shall send alarm reports to multiple operator workstations without dependence upon a central or intermediate processing device. The network shall also allow any Building controller to access, edit, modify, add, delete, back up, restore all system point database and all programs.
f. The primary network shall allow the Building Controllers to assign password access and control priorities to each point individually. The logon password (at any PC workstation or portable operator terminal) shall enable the operator to monitor, adjust and control only the points that the operator is authorized for. All other

points shall not be displayed at the PC workstation or portable terminal. (e.g. all base building and all tenant points shall be accessible to any base building operators, but only certain base building and tenant points shall be accessible to tenant building operators). Passwords and priorities for every point shall be fully programmable and adjustable.

g. Devices containing custom programming must reside on the Primary Network

h. Secondary Network – Application Specific Controller Communication:

H. Communication over the secondary network can be the manufacturer's standard protocol

I. Communication over the secondary network must allow BACnet MS/TP protocol.

J. This level communication shall support a family of application specific controllers for terminal equipment.

K. The Application Specific Controllers shall communicate bi-directionally with the primary network through Building Controllers for transmission of global data.

L. A maximum of 30 terminal equipment controllers may be configured on individual secondary network trunks to insure adequate global data and alarm response times.

2.3 OPERATOR INTERFACE:

A. Workstation hardware:

1. Personal computer operator workstations shall be provided for command entry, information management, system monitor, alarm management and database management functions. All real-time control functions shall be resident in the Building Controllers to facilitate greater distribution, fault tolerance and reliability of the building automation control.

a. Provide workstation(s) of equal capability as located on plans.

b. Workstation shall consist of a personal computer with hardware and operating system to match current police station standard. Workstation selection shall be submitted to owner for review and approval based on current police station standards.

c. The PC monitor shall be a flat panel LCD graphic display, and shall support a minimum display resolution of no less than 1280 × 1024 pixels. The display shall have a minimum of 20" visible area in diagonal measurement for standard aspect ratio displays, 22" for widescreen displays. Separate controls shall be provided for color, contrasts and brightness. The screen shall be non-reflective. Monitor selection shall be submitted to owner for review and approval based on current police station standards.

d. Provide a 24 pin dot matrix continuous tractor feed printer at each workstation location or on the network (Ethernet) for recording alarms, operator transactions and systems reports. Printer selection shall be submitted to owner for review and approval based on current police station standards.

e. Provide a PCL5 color printer for printing of dynamic trend graph report, Excel reports, graphics and any other screen displays. Printer selection shall be submitted to owner for review and approval based on current police station standards.

f. Alarm Display shall list the alarms with highest priority at the top of the display. The alarm display shall provide selector buttons for display of the associated point graphic and message. The alarm display shall provide a mechanism for the operator to sort alarms.

g. Operator Interface Software:

2. Basic Interface Description

a. Operator interface software shall minimize operator training through the use of user-friendly and interactive graphical applications, 30-character English language point identification, on-line help, and industry standard Windows application software. Interface software shall simultaneously communicate with and share data between Ethernet-connected building level networks.

b. Provide a graphical user interface that shall minimize the use of keyboard through the use of a mouse or similar pointing device, with a "point and click" approach to menu selection and a “drag and drop” approach to inter-application navigation.

c. The navigation shall be user friendly by utilizing “forward & back” capability between screens and embedded hyperlinks to open graphics, documents, drawings, etc.

d. Selection of applications within the operator interface software shall be via a graphical toolbar menu – the application toolbar menu shall have the option to be located in a docked position on any of the four sides of the visible desktop space on the workstation display monitor, and the option to automatically hide itself from the visible monitor workspace when not being actively manipulated by the user.

e. The software shall provide a multi-tasking type environment that allows the user to run several applications simultaneously. BMS software shall run on a Windows XP, 2000, or comparable 32 bit operating system. System database parameters shall be stored within an object-oriented database. Standard Windows applications shall run simultaneously with the BMS software. The mouse or Alt-Tab keys shall be used to quickly select and switch between multiple applications. The operator shall be able to work in Microsoft Word, Excel, and other Windows based software packages, while concurrently annunciating on-line BMS alarms and monitoring information

f. The software shall provide, as a minimum, the following functionality:

1) Real-time graphical viewing and control of the BMS environment
2) Reporting
3) Scheduling and override of building operations
4) Collection and analysis of historical data
5) Point database editing, storage and downloading of controller databases.
6) Utility for combining points into logical Point Groups. The Point Groups shall then be manipulated in Graphics, trend graphs and reports in order to streamline the navigation and usability of the system.
7) Alarm reporting, routing, messaging, and acknowledgment
8) “Collapsible tree,” dynamic system architecture diagram application:
9) Showing the real-time status and definition details of all workstations and devices on a management level network
10) Showing the real-time status and definition details of all Building Controllers at the Primary Network.
11) Showing the definition details of all application specific controllers
12) Definition and construction of dynamic color graphic displays.

13) Online, context-sensitive help, including an index, glossary of terms, and the capability to search help via keyword or phrase.
14) On-screen access to User Documentation, via online help or PDF-format electronic file.
15) Automatic database backup at the operator interface for database changes initiated at Building Controllers.
16) Display dynamic trend data graphical plot.
17) Must be able to run multiple plots simultaneously
18) Each plot must be capable of supporting 10 pts/plot minimum
19) Must be able to command points directly off dynamic trend plot application.
20) Must be able to plot both real-time and historical trend data
21) Program editing
22) Transfer trend data to 3rd party spreadsheet software
23) Scheduling reports
24) Operator Activity Log
25) Open communications via OPC Server
26) Open communications via BACnet Client & Server

g. Enhanced Functionality:
1) Provide functionality such that any of the following may be performed simultaneously on-line, and in any combination, via adjustable user-sized windows. Operator shall be able to drag and drop information between the following applications, reducing the number of steps to perform a desired function (e.g., Click on a point on the alarm screen and drag it to the dynamic trend graph application to initiate a dynamic trend on the desired point):
2) Dynamic color graphics application
3) Alarm management application
4) Scheduling application
5) Dynamic trend graph data plotter application
6) Dynamic system architecture diagram application
7) Control Program and Point database editing applications
8) Reporting applications
9) Report and alarm printing shall be accomplished via Windows Print Manager, allowing use of network printers.
10) Security: Operator-specific password access protection shall be provided to allow the administrator/manager to limit users' workstation control, display and data base manipulation capabilities as deemed appropriate for each user, based upon an assigned password. Operator privileges shall "follow" the operator to any workstation logged onto (up to 999 user accounts shall be supported). The administrator or manager shall be able to grant discrete levels of access and privileges, per user, for each point, graphic, report, schedule, and BMS workstation application. And each BMS workstation user account shall use a Windows Operating System user account as a foundation.
11) The operator interface software shall also include an application to track the actions of each individual operator, such as alarm acknowledgement, point commanding, schedule overriding, database editing, and logon/logoff. The application shall list each of the actions in a tabular format, and shall have sorting capabilities based on parameters such as ascending or descending

time of the action, or name of the object on which the action was performed. The application shall also allow querying based on object name, operator, action, or time range.

h. Dynamic Color Graphics application shall include the following:
   1) Must include graphic editing and modifying capabilities
   2) A library of standard control application graphics and symbols must be included
   3) Must be able to command points directly off graphics application
   4) Graphic display shall include the ability to depict real-time point values dynamically with animation, picture/frame control, symbol association, or dynamic informational text-blocks
   5) Navigation through various graphic screens shall be optionally achieved through a hierarchical “tree” structure
   6) Graphics viewing shall include zoom capabilities
   7) Graphics shall be capable of displaying the status of points that have been overridden by a field HAND switch, for points that have been designed to provide a field HAND override capability.
   8) Advanced linking within the Graphics application shall provide the ability to navigate to outside documents (e.g., .doc, .pdf, .xls, etc.), Internet web addresses, e-mail, external programs, and other workstation applications, directly from the Graphics application window with a mouse-click on a customizable link symbol.
   9) Reports shall be generated on demand or via pre-defined schedule, and directed to displays, printers or file. As a minimum, the system shall allow the user to easily obtain the following types of reports:
   10) A general listing of all or selected points in the network
   11) List of all points currently in alarm
   12) List of all points currently in override status
   13) List of all disabled points
   14) List of all points currently locked out
   15) List of user accounts and access levels
   16) List all weekly schedules and events
   17) List of holiday programming
   18) List of control limits and deadbands
   19) Custom reports from 3rd party software
   20) System diagnostic reports including, list of Building panels on line and communicating, status of all Building VVT unit device points
   21) List of programs
   22) List of point definitions
   23) List of logical point groups
   24) List of alarm strategy definitions
   25) List of Building Control panels
   26) Point totalization report
   27) Point Trend data listings
   28) Initial Values report
   29) User activity report
   30) Scheduling and override
   31) Provide a calendar type format for simplification of time and date scheduling and overrides of building operations. Schedule definitions reside

in the PC workstation and in the Building Controller to ensure time equipment scheduling when PC is off-line, PC is not required to execute time scheduling. Provide override access through menu selection, graphical mouse action or function key. Provide the following capabilities as a minimum:

i. Weekly schedules
   1) Zone schedules
   2) Event schedules – an event consists of logical combinations of equipment and/or zones
   3) Report schedules
   4) Ability to schedule for a minimum of up to ten (10) years in advance.
   5) Additionally, the scheduling application shall:
   6) Provide filtering capabilities of schedules, based on name, time, frequency, and schedule type (event, zone, report)
   7) Provide sorting capabilities of schedules, based on name, time and type of schedule (zone, event, report)
   8) Provide searching capabilities of schedules based on name – with wildcarding options

j. Collection and Analysis of Historical Data
   1) Provide trending capabilities that allow the user to easily monitor and preserve records of system activity over an extended period of time. Any system point may be trended automatically at time-based intervals (up to four time-based definitions per point) or change of value, both of which shall be user-definable. Trend data shall be collected stored on hard disk for future diagnostics and reporting. Automatic Trend collection may be scheduled at regular intervals through the same scheduling interface as used for scheduling of zones, events, and reports. Additionally, trend data may be archived to network drives or removable disk media for future retrieval.
   2) Trend data reports shall be provided to allow the user to view all trended point data. Reports may be customized to include individual points or predefined groups of selected points. Provide additional functionality to allow predefined groups of up to 250 trended points to be easily transferred on-line to Microsoft Excel. BMS contractor shall provide custom designed spreadsheet reports for use by the owner to track energy usage and cost, equipment run times, equipment efficiency, and/or building environmental conditions. BMS contractor shall provide setup of custom reports including creation of data format templates for monthly or weekly reports.
   3) Provide additional functionality that allows the user to view real-time trend data on trend graphical plot displays. A minimum of ten points may be plotted, of either real-time or historical data. The dynamic graphs shall continuously update point values. At any time the user may redefine sampling times or range scales for any point. In addition, the user may pause the display and take "snapshots" of plot screens to be stored on the workstation disk for future recall and analysis. Exact point values may be viewed and the graphs may be printed. A minimum of ten (10) dynamic graphs shall run simultaneously. Operator shall be able to command points directly on the trend plot by double clicking on the point. Operator shall be able to zoom in on a specific time range within a plot. The dynamic trend plotting application shall support the following types of graphs, with option

to graph in 3D: line graph, area graph, curve graph, area-curve graph, step graph, and scatter graph. Each graph may be customized by the user, for graph type, graph text, titles, line styles and weight, colors, and configurable x- and y-axes.

k. Dynamic Color Graphic Displays

1) Capability to create color graphic floor plan displays and system schematics for each piece of mechanical equipment, including, but not limited to, air handling units, and room level VVT units.
2) The operator interface shall allow users to access the various system schematics and floor plans via a graphical penetration scheme, menu selection, point alarm association, or text-based commands. Graphics software shall permit the importing of AutoCAD or scanned pictures for use in the system.
3) Dynamic temperature values, humidity values, flow values and status indication shall be shown in their actual respective locations within the system schematics or graphic floor plan displays, and shall automatically update to represent current conditions without operator intervention and without pre-defined screen refresh rates.
4) Provide the user the ability to display real-time point values by animated motion or custom picture control visual representation. Animation shall depict movement of mechanical equipment, or air or fluid flow. Picture Control shall depict various positions in relation to assigned point values or ranges. A library (set) of animation and picture control symbols shall be included within the operator interface software's graphics application. Animation shall reflect, ON or OFF conditions, and shall also be optionally configurable for up to five rates of animation speed.
5) Sizable analog bars shall be available for monitor and control of analog values; high and low alarm limit settings shall be displayed on the analog scale. The user shall be able to "click and drag" the pointer to change the setpoint.
6) Provide the user the ability to display blocks of point data by defined point groups; alarm conditions shall be displayed by flashing point blocks.
7) Equipment state or values can be changed by clicking on the associated point block or graphic symbol and selecting the new state (on/off) or setpoint.
8) State text for digital points can be user-defined up to eight characters.
9) Colors shall be used to indicate status and change as the status of the equipment changes. The state colors shall be user definable.
10) Advanced linking within the Graphics application shall provide the ability to navigate to outside documents (e.g., .doc, .pdf, .xls, etc.), Internet web addresses, e-mail, external programs, and other workstation applications, directly from the Graphics application window with a mouse-click on a customizable link symbol.
11) The Windows environment of the PC operator workstation shall allow the user to simultaneously view several applications at a time to analyze total building operation or to allow the display of a graphic associated with an alarm to be viewed without interrupting work in progress.
12) Off the shelf graphic software shall be provided to allow the user to add, modify or delete system graphic background displays.

13) A clipart library of HVAC application and automation symbols shall be provided including fans, valves, motors, chillers, AHU systems, standard ductwork diagrams and laboratory symbols. The user shall have the ability to add custom symbols to the clipart library. The clipart library shall include a minimum of 400 application symbols. In addition, a library consisting of a minimum of 700 graphic background templates shall be provided.

14) The Graphics application shall include a set of standard Terminal Equipment controller application-specific background graphic templates. Templates shall provide the automatic display of a selected Terminal Equipment controller's control values and parameters, without the need to create separate and individual graphic files for each controller.

l. System Configuration & Definition

1) A "Collapsible tree," dynamic system architecture diagram/display application of the site-specific BMS architecture showing status of controllers, PC workstations and networks shall be provided. This application shall include the ability to add and configure workstations, Building Controllers, as well as 3rd-party integrated components. Symbols/Icons representing the system architecture components shall be user-configurable and customizable, and a library of customized icons representing 3rd-party integration solutions shall be included. This application shall also include the functionality for real-time display, configuration and diagnostics connections to Building Controllers.

2) Network wide control strategies shall not be restricted to a single Building Controller, but shall be able to include data from any and all other network panels to allow the development of Global control strategies.

3) Provide automatic backup and restore of all Building controller databases on the workstation hard disk. In addition, all database changes shall be performed while the workstation is on-line without disrupting other system operations. Changes shall be automatically recorded and downloaded to the appropriate Building Controller. Changes made at the user-interface of Building Controllers shall be automatically uploaded to the workstation, ensuring system continuity.

4) System configuration, programming, editing, graphics generation shall be performed on-line.

5) Point database configuration shall be available to the user within a dedicated point database editor application included in the operator interface software. The editor shall allow the user to create, view existing, modify, copy, and delete points from the database.

6) The point editor shall have the capability to assign "informational text" to points as necessary to provide critical information about the equipment.

7) The point editor shall also allow the user to configure the alarm management strategy for each point. The editor shall provide the option for editing the point database in an online or offline mode with the Building Controllers.

8) The operator interface software shall also provide the capability to perform bulk modification of point definition attributes to a single or multiple user-selected points. This function shall allow the user to choose the properties to copy from a selected point to another point or set of points. The

selectable attributes shall include, but are not limited to, Alarm management definitions and Trend definitions.

9) Control program configuration shall be available to the user within a dedicated control program editor application included in the operator interface software. The editor shall allow for creation, modification and deletion of control programs. The editor shall include a programming assistance feature that interactively guides the user through parameters required to generate a control program. The editor shall also include the ability to automatically compile the program to ensure its compatibility with the Building Controllers. The editor shall provide the option for editing the control programs in an online or offline mode, and also the ability to selectively enable or disable the live program execution within the Building Controllers.

m. Alarm Management

1) Alarm Routing shall allow the user to send alarm notification to selected printers or workstation location(s) based on time of day, alarm severity, or point type.

2) Alarm Notification shall be presented to each workstation in a tabular format application, and shall include the following information for each alarm point: name, value, alarm time & date, alarm status, priority, acknowledgement information, and alarm count. Each alarm point or priority shall have the ability to sound a discrete audible notification.

3) Alarm Display shall have the ability to list & sort the alarms based on alarm status, point name, ascending or descending alarm time.

4) Directly from the Alarm Display, the user shall have the ability to acknowledge, silence the alarm sound, print, or erase each alarm. The interface shall also have the option to inhibit the erasing of active acknowledged alarms, until they have returned to normal status. The user shall also have the ability to command, launch an associated graphic or trended graphical plot, or run a report on a selected alarm point directly on the Alarm Display.

5) Each alarm point shall have a direct link from the Alarm Display to further user-defined point informational data. The user shall have the ability to also associate real-time electronic annotations or notes to each alarm.

6) Alarm messages shall be customizable for each point, or each alarm priority level, to display detailed instructions to the user regarding actions to take in the event of an alarm. Alarm messages shall also have the optional ability to individually enunciate on the workstation display via a separate pop-up window, automatically being generated as the associated alarm condition occurs. The system shall have the ability to modify the priority text based on operator preference.

7) Alarm Display application shall allow workstation operators to send and receive real-time messages to each other, for purposes of coordinating Alarm and BMS system management.

B. PORTABLE OPERATOR'S TERMINAL (POT)

1. Provide Notebook style industry standard, commercially available portable operator terminals with a LCD display and a full-featured keyboard. When shown on contract

drawings. The POT shall be handheld and plug directly into all Building Controllers as described below. Provide a user-friendly, English language-prompted interface for quick access to system information, not codes requiring look-up charts. Carrier i-Vu software shall be provided and installed to meet this requirement. Carrier software shall also be installed to allow an i-Vu session to be run at field panel locations that have an available MLN Ethernet port. Notebook selection shall be submitted to owner for review and approval based on current police station standards.

2. Functionality of the portable operator's terminal connected at any Building Controller:
   a. Access all Building Controllers and Application Specific Controllers (ASCs) on the network.
   b. Backup and/or restore Building Controller data bases for all system panels, not just the Building Controller connected to.
   c. Display all point, selected point and alarm point summaries.
   d. Display trending and totalization information.
   e. Add, modify and/or delete any existing or new system point.
   f. Command, change, and enable/disable any system point.
   g. Program and load custom control sequences as well as standard energy management programs.
   h. Acknowledge alarms
3. Functionality of the portable operator's terminal connected to any application specific controller:
   a. Provide connection capability at either the Floor Level Network Controller or a related room sensor to access controller information.
   b. Provide status, setup and control reports.
   c. Modify, select and store controller data base.
   d. Command, change, and enable/disable any controller point.
4. Connection of a POT to a Building or ASC Controller shall not interrupt nor interfere with normal network operation in any way, prevent alarms from being transmitted or preclude centrally-initiated commands and system modification.
5. Portable operator terminal access to controller shall be password-controlled. Password protection shall be configurable for each operator based on function, points (designating areas of the facility), and edit/view capability.

2.4 BUILDING CONTROLLER SOFTWARE

A. General:
   1. Furnish the following applications software to form a complete operating system for building and energy management as described in this specification.
   2. The software programs specified in this Section shall be provided as an integral part of Building Controllers and shall not be dependent upon any higher level computer or another controller for execution.
   3. All points, panels and programs shall be identified by a 30 character name. All points shall also be identified by a 16 character point descriptor. The same names shall be displayed at both Building Controller and the Operator Interface.
   4. All digital points shall have a user defined two-state status indication with 8 characters minimum (e.g. Summer, Enabled, Disabled, Abnormal).
   5. The Building Controller Software shall be capable of BACnet communications. The BACnet Building Controller (B-BC) shall have demonstrated interoperability during at

least one BTL Interoperability Workshop and shall substantially conform to BACnet Building Controller (B-BC) device profile as specified in ANSI/ASHRAE 135-2004, Annex L.

6. Building Controllers shall have the ability to perform energy management routines including but not limited to time of day scheduling, calendar-based scheduling, holiday scheduling, temporary schedule overrides, start stop time optimization, automatic daylight savings time switch over, night setback control, enthalpy switch over, peak demand limiting, temperature-compensated duty cycling, heating / cooling interlock, supply temperature reset, priority load shedding, and power failure restart.
7. The Building Controllers shall have the ability to perform the following pre tested control algorithms:
   a. Two position control
   b. Proportional control
   c. Proportional plus integral control
   d. Proportional, integral, plus derivative control
   e. Automatic tuning of control loops
   f. Model-Free Adaptive Control
8. Each controller shall be provided with an interactive HELP function to assist operators using POTs and remote connected operators.
9. Building Controllers shall not be susceptible` to Microsoft Windows operating systems based viruses.

B. System Security
1. User access shall be secured using individual security passwords and user names.
2. Passwords shall restrict the user to the objects, applications, and system functions as assigned by the system manager.
3. User Log On / Log Off attempts shall be recorded.
4. The system shall protect itself from unauthorized use by automatically logging off following the last keystroke. The delay time shall be user-definable.
5. Use of workstation resident security as the only means of access control is not an acceptable alternative to resident system security in the field panel.

C. User Defined Control Applications:
1. Controllers shall be able to execute custom, job-specific processes defined by the user, to automatically perform calculations and special control routines.
2. It shall be possible to use any system measured point data or status, any system calculated data, a result from any process, or any user-defined constant in any controller in the system.
3. Any process shall be able to issue commands to points in any and all other controllers in the system.
4. Processes shall be able to generate operator messages and advisories to other operator I/O devices. A process shall be able to directly send a message to a specified device or cause the execution of a dial-up connection to a remote device such as a printer or pager.
5. Each controller shall support plain language text comment lines in the operating program to allow for quick troubleshooting, documentation, and historical summaries of program development.
6. Controller shall provide a HELP function key, providing enhanced context sensitive on-line help with task oriented information from the user manual.

D. Alarm Management:
   1. Alarm management shall be provided to monitor and direct alarm information to operator devices. Each Building Controller shall perform distributed, independent alarm analysis, minimize network traffic and prevent alarms from being lost. At no time shall the Building Controllers ability to report alarms be affected by either operator or activity at a PC workstation, local I/O device or communications with other panels on the network.
   2. Conditional alarming shall allow generation of alarms based upon user defined multiple criteria.
   3. An Alarm “shelving” feature shall be provided to disable alarms during testing. (Pull the Plug, etc.).
   4. Binary Alarms. Each binary object shall be set to alarm based on the operator-specified state. Provide the capability to automatically and manually disable alarming.
   5. Analog Alarms. Each analog object shall have both high and low alarm limits. Alarming must be able to be automatically and manually disabled.
   6. All alarm or point change reports shall include the point's user defined language description and the time and date of occurrence.
   7. Alarm reports and messages shall be routed to user-defined list of operator workstations, or other devices based on time and other conditions. An alarm shall be able to start programs, print, be logged in the event log, generate custom messages, and display graphics.
   8. In addition to the point's descriptor and the time and date, the user shall be able to print, display or store a 200 character alarm message to more fully describe the alarm condition or direct operator response.
   9. Each Building Controller shall be capable of storing a library of at least 50 alarm messages. Each message may be assignable to any number of points in the Controller.

E. Scheduling:
   1. Provide a comprehensive menu driven program to automatically start and stop designated multiple objects or events in the system according to a stored time.
   2. Schedules shall reside in the building controller and shall not rely on external processing or network.
   3. It shall be possible to define a group of objects as a custom event (i.e. meeting, athletic activity, etc.). Events can then be scheduled to operate all necessary equipment automatically.
   4. For points assigned to one common load group, it shall be possible to assign variable time delays between each successive start and/or stop within that group.
   5. The operator shall be able to define the following information:
      a. Time, day
      b. Commands such as on, off, auto, etc.
      c. Time delays between successive commands.
      d. There shall be provisions for manual overriding of each schedule by an authorized operator.
   6. It shall be possible to schedule calendar-based events up to one year in advance based on the following:
      a. Weekly Schedule. Provide separate schedules for each day of the week. Each of these schedules should include the capability for start, stop, optimal start, optimal stop, and night economizer. When a group of objects are scheduled together as an Event, provide the capability to adjust the start and stop times for each member.

b. Exception Schedules. Provide the ability for the operator to designate any day of the year as an exception schedule. Exception schedules may be defined up to a year in advance. Once an exception schedule is executed, it will be discarded and replaced by the standard schedule for that day of the week.
c. Automatic Daylight Savings Time Switchover: The system shall provide automatic time adjustment for switching to/from Daylight Savings Time.
d. Night setback control. The system shall provide the ability to automatically adjust setpoints for night control.
e. Loop Control. A Model-Free Adaptive Control algorithm or alternatively a PID (proportional-integral-derivative) closed-loop control algorithm with direct or reverse action and anti-windup shall be supplied. The algorithm shall calculate a time-varying analog value that is used to position an output or stage a series of outputs. The controlled variable, set point, and weighting parameters shall be user-selectable.
f. Sequencing. Provide application software based upon the sequences of operation specified to properly sequence equipment.
g. Staggered Start:
    1) This application shall prevent all controlled equipment from simultaneously restarting after a power outage. The order in which equipment (or groups of equipment) is started, along with the time delay between starts, shall be user definable.
    2) Upon the resumption of power, each Building Controller shall analyze the status of all controlled equipment, compare it with normal occupancy scheduling and turn equipment on or off as necessary to resume normal operations.
h. Totalization:
    1) Run-Time Totalization. Building Controllers shall automatically accumulate and store run-time hours for all digital input and output points. A high runtime alarm shall be assigned, if required, by the operator.
    2) Consumption totalization. Building Controllers shall automatically sample, calculate and store consumption totals on a daily, weekly or monthly basis for all analog and digital pulse input type points.
    3) Event totalization. Building Controllers shall have the ability to count events such as the number of times a pump or fan system is cycled on and off. Event totalization shall be performed on a daily, weekly or monthly basis for all points. The event totalization feature shall be able to store the records associated with events before reset.

F. Data Collection:
1. A variety of historical data collection utilities shall be provided to manually or automatically sample, store, and display system data for all points.
2. Building Controllers shall store point history data for selected analog and digital inputs and outputs:
    a. Any point, physical or calculated may be designated for trending. Any point, regardless of physical location in the network, may be collected and stored in each Building Controllers point group.
3. Trend data shall be stored at the Building Controllers and uploaded to the workstation when retrieval is desired. Uploads shall occur based upon either user-defined interval,

manual command or when the trend buffers are full. All trend data shall be available for use in 3rd party personal computer applications.

4. Loop Tuning. Building Controllers shall also provide high resolution sampling capability for verification of DDC control loop performance. Documented evidence of tuned control loop performance shall be provided on a seasonal basis, at the beginning of the heating season in the Fall, and at the beginning of the cooling season in the Spring.
   a. For Model-Free Adaptive Control loops, evidence of tuned control loop performance shall be provided via graphical plots or trended data logs. Graphical plots shall minimally include depictions of setpoint, process variable (output), and control variable (e.g., temperature). Other parameters that may influence loop control shall also be included in the plot (e.g., fan on/off, mixed-air temp).
   b. For PID control loops, operator-initiated automatic and manual loop tuning algorithms shall be provided for all operator-selected PID control loops. Evidence of tuned control loop performance shall be provided via graphical plots or trended data logs for all loops.
   c. In automatic mode, the controller shall perform a step response test with a minimum one-second resolution, evaluate the trend data, calculate the new PID gains and input these values into the selected LOOP statement.
   d. Loop tuning shall be capable of being initiated either locally at the Building Controller, from a network workstation or remotely using dial-in modems. For all loop tuning functions, access shall be limited to authorized personnel through password protection.

2.5 BUILDING CONTROLLERS

A. Building Controllers shall be 32 bit, multi-tasking, multi-user, real-time 48 MHz digital control processors consisting of modular hardware with plug-in enclosed processors, communication controllers, power supplies and input/output point modules. Controller size shall be sufficient to fully meet the requirements of this specification and the attached point list.

B. Each Building Controller shall support a minimum of 3 directly connected Secondary Networks.

C. Each Building Controller shall have sufficient memory, a minimum of 72 megabyte, to support its own operating system and databases, including control processes, energy management applications, alarm management applications, historical/trend data for points specified, maintenance support applications, custom processes, operator I/O, and dial-up communications.

D. Building Controller shall have an integral real-time clock.

E. Each Building Controller shall support firmware upgrades without the need to change hardware.

F. Each Building Controller shall support:
   1. Monitoring of industry standard analog and digital inputs, without the addition of equipment outside the Building Controller cabinet.
   2. Monitoring of industry standard analog and digital outputs, without the addition of equipment outside the Building Controller cabinet.

G. Spare Point Capacity. Each Building Controller shall have a minimum of 10 percent spare point capacity.
   1. The type of spares shall be in the same proportion as the implemented I/O functions of the panel, but in no case shall there be less than one spare of each implemented I/O type.
   2. Provide all processors, power supplies, and communication controllers so that the implementation of adding a point to the spare point location only requires the addition of the appropriate:
      a. Expansion modules
      b. Sensor/actuator
      c. Field wiring/tubing.

H. Serial Communication. Building Controllers shall provide at least two EIA-232C serial data communication ports for operation of operator I/O devices such as industry standard printers, operator terminals, and portable laptop operator's terminals. Building Controllers shall allow temporary use of portable devices without interrupting the normal operation of permanently connected printers or terminals.

I. Manual Override. The operator shall have the ability to manually override automatic or centrally executed commands at the Building Controller via local, point discrete, integral hand/off/auto operator override switches for all digital control type points and gradual switches for all analog control type points. These override switches shall be operable whether the panel processor is operational or not. Each Building Controller shall monitor and alarm the hand, off and auto positions of integral HOA switches.

J. I/O Status and Indication. Building Controllers shall provide local LED status indication for each digital input and output for constant, up-to-date verification of all point conditions without the need for an operator I/O device. Graduated intensity LEDs or analog indication of value shall also be provided for each analog output. All wiring connections shall be made to field-removable terminals.

K. Self Diagnostics. Each Building Controller shall continuously perform self diagnostics, communication diagnosis, and diagnosis of all panel components. The Building Controller shall provide both local and remote annunciation of any detected component failures, low battery conditions or repeated failure to establish communication for any system.

L. Power loss. In the event of the loss of power, there shall be an orderly shutdown of all Building Controllers to prevent the loss of database or operating system software. Non-volatile memory shall be incorporated for all critical controller configuration data and battery backup shall be provided to support the real-time clock and all volatile memory for a minimum of 100 hours.

M. Environment.
   1. Controller hardware shall be suitable for the anticipated ambient conditions.
   2. Controllers used outdoors and/or in wet ambient conditions shall be mounted within waterproof enclosures and shall be rated for operation at 0°C to 49°C (32°F to 120°F).
   3. Controllers used in conditioned space shall be mounted in dust-proof enclosures and shall be rated for operation at 0°C to 49°C (32°F to 120°F).

N. Immunity to power and noise.
   1. Controller shall be able to operate at 90% to 110% of nominal voltage rating and shall perform an orderly shutdown below 80% nominal voltage.

2. Operation shall be protected against electrical noise of 5 to 120 Hz and from keyed radios up to 5 W at 1 m (3 ft).
3. Isolation shall be provided at all primary network terminations, as well as all field point terminations to suppress induced voltage transients consistent with:
   a. RF-Conducted Immunity (RFCI) per ENV 50141 (IEC 1000-4-6) at 3 V
   b. Electro Static Discharge (ESD) Immunity per EN 61000-4-2 (IEC 1000-4-2) at 8 kV air discharge, 4 kV contact
   c. Electrical Fast Transient (EFT) per EN 61000-4-4 (IEC 1000-4-4) at 500 V signal, 1 kV power
   d. Output Circuit Transients per UL 864 (2,400V, 10A, 1.2 Joule max)

O. Isolation shall be provided at all Building Controller's AC input terminals to suppress induced voltage transients consistent with:
   1. IEEE Standard 587 1980
   2. UL 864 Supply Line Transients
   3. Voltage Sags, Surge, and Dropout per EN 61000-4-11 (EN 1000-4-11)
   4. Minimum Approved Building Controllers. BMS Contractors shall furnish Building Controllers as listed below. Providing an approved controller does not release the contractor from meeting all performance, software and hardware specifications for Building Controllers and system operations.

P. Carrier - Modular Building/Equipment Controllers

2.6 APPLICATION SPECIFIC CONTROLLERS (ASC)

A. General:
   1. Provide for control of each piece of equipment , including, but not limited to the following:
      a. Variable Volume & Temperature (VVT) dampers
      b. Reheat Coils (RH)
      c. Fan Coil Units (FCU)
      d. Unit Conditioners
      e. Heat Pumps
      f. Laboratory controls to include: Fume hood exhaust, General exhaust and Laboratory Supply box
      g. Exhaust Fans, Make-up air fans and Laboratory exhaust systems
   2. Each Building Controller shall be able to communicate with application specific controllers (ASCs) over the Secondary Network to control terminal equipment only.
   3. The use of Secondary Network controllers with custom program applications to control AHU's, water systems, etc. is not acceptable.
   4. Each ASC shall operate as a stand-alone controller capable of performing its specified control responsibilities independently of other controllers in the network. Each ASC shall be a microprocessor-based, multi-tasking, real-time digital control processor.
   5. Each ASC shall include all point inputs and outputs necessary to perform the specified control sequences. The ASC shall accept input and provide output signals that comply with industry standards. Controllers utilizing proprietary control signals shall not be acceptable. Outputs utilized either for two-state, modulating floating, or proportional control, allowing for additional system flexibility.

6. Space Temperature Sensors. Each controller performing space temperature control shall be provided with a matching room temperature sensor. For private offices and conference rooms, space temperature sensors shall be user adjustable, with temperature and setpoint indication. For classrooms, laboratories, corridors, and other public spaces, space temperature sensors shall be non-adjustable with tamper proof cover. All conditioned spaces other than corridors shall be provided with an occupancy override switch for after hours operation.
   a. Wired Sensor specifications. The sensor may be either RTD or thermistor type providing the following.
      1) Accuracy: + .5 F
      2) Operating Range: 35 to 115 F
      3) Set Point Adjustment Range: 55 to 95 F
      4) Calibration Adjustments: None required
      5) Installation: Up to 100 ft. from controller
      6) Auxiliary Communications Port:
      7) Local LCD Temperature Display: as required
      8) Set Point Adjustment Dial as required
      9) Occupancy Override Switch as required
      10) Wireless Space Temperature Sensors specifications. The sensor shall be 100K Ohm Thermistor or equivalent type providing the following. [off]
      11) Accuracy: + .5 F
      12) Operating Range: 35 to 95 F
      13) Monitoring Range: 55 to 95 F
      14) Calibration Adjustments: None required
      15) Installation: Up to 100 ft. from controller
      16) Battery life: Minimum 3 years
      17) Auxiliary Communications Port: as required
      18) Set Point Modes:
      19) Independent Heating, Cooling
      20) Night Setback-Heating
      21) Night Setback-Cooling
      22) Auxiliary Communication Port. Each room temperature sensor shall include a terminal jack integral to the sensor assembly. The terminal jack shall be used to connect a portable operator's terminal to control and monitor all hardware and software points associated with the controller. RS-232 communications port shall allow the operator to query and modify operating parameters of the local room terminal unit from the portable operator’s terminal.
      23) Set Point Adjustment Dial. The set point adjustment dial shall allow for modification of the temperature by the building operators. Set point adjustment may be locked out, overridden, or limited as to time or temperature through software by an authorized operator at any central workstation, Building Controller, room sensor two-line display, or via the portable operator's terminal.
      24) Override Switch. An override switch shall initiate override of the night setback mode to normal (day) operation when activated by the occupant and enabled by building operators. The override shall be limited to two (2) hours (adjustable.) The override function may be locked out, overridden, or limited through software by an authorized operator at the operator interface,

Building Controller, room sensor two-line display or via the portable operator's terminal.

7. Communication. Each controller shall perform its primary control function independent of other Secondary Network communication, or if Secondary Network communication is interrupted. Reversion to a fail-safe mode of operation during Secondary Network interruption is not acceptable.
8. Control Algorithms. The controller shall receive its real-time data from the Building Controller time clock to insure Secondary Network continuity. Each controller shall include algorithms incorporating proportional, integral and derivative (PID) gains for all applications. All PID gains and biases shall be field-adjustable by the user via room sensor LCD or the portable operator’s terminal as specified herein. Controllers that incorporate proportional and integral (PI) control algorithms only shall not be acceptable.
9. Control Applications. Operating programs shall be field-selectable for specific applications. In addition, specific applications may be modified to meet the user's exact control strategy requirements, allowing for additional system flexibility. Controllers that require factory changes of all applications are not acceptable.
10. Calibration. Each controller shall include provisions for manual and automatic calibration of the differential pressure transducer in order to maintain stable control and insuring against drift over time.
11. Manual calibration may be accomplished by either commanding the actuator to 0% via the POT or by depressing the room sensor override switch. Calibration of the transducer at the controller location shall not be necessary
12. Calibration shall be accomplished by stroking the terminal unit damper actuator to a 0% position so that a 0 CFM air volume reading is sensed. The controller shall automatically accomplish this whenever the system mode switches from occupied to unoccupied or vice versa.
13.
14. Calibration shall be accomplished by zeroing out the pressure sensor and holding damper at last known position until calibration is complete. The controller shall automatically accomplish this whenever the system mode switches from occupied to unoccupied or vice versa.

B. Memory.
1. Provide each ASC with sufficient memory to accommodate point databases, operating programs, local alarming and local trending. All databases and programs shall be stored in non-volatile EEPROM, EPROM and PROM, or minimum of 72-hour battery backup shall be provided. The controllers shall be able to return to full normal operation without user intervention after a power failure of unlimited duration.
2. Upon replacement, new ASCs shall recover control function and site specific defaults automatically and resume normal operation.

C. Power Supply. The ASCs shall be powered from a 24 VAC source and shall function normally under an operating range of 18 to 28 VAC, allowing for power source fluctuations and voltage drops. Power supply for the ASC must be rated at a minimum of 125% of ASC power consumption and shall be of the fused or current limiting type. The BMS contractor shall provide 24 VAC power to the terminal units by utilizing:
1. The existing line voltage power trunk and installing separate isolation transformers for each controller

2. Dedicated line voltage power source and isolation transformers at a central location and installing 24VAC power trunk to supply multiple ASCs in the area.

D. Environment. The controllers shall function normally under ambient conditions of 32 to 122 F (0 to 50 C) and 10% to 95%RH (non-condensing). Provide each controller with a suitable cover or enclosure to protect the circuit board assembly.

E. Immunity to noise. Operation shall be protected against electrical noise of 5-120 Hz and from keyed radios up to 5 W at 1 m (3 ft).

F. Manufacturer Installed Controls.
1. BMS manufacturer shall furnish ASC and actuator for factory mounting to equipment manufacturer.
2. Cost of factory mounting shall be borne by equipment manufacturer.
3. For VVT terminals, equipment manufacturer shall provide and install flow-cross sensor, 24 Vac transformer, controls enclosure, fan relay, SCR and factory install, wire and tube the ASC controller and actuator provided by Carrier.
4. Controllers for CV terminals.

G. Constant volume ASCs shall meet all requirements of paragraphs as previously specified for VVT terminals. The controllers shall have a minimum and maximum flow set point, which shall be selected based on interior ventilation requirements. Under normal conditions, the set point shall be set to minimum set point. When the floor area requires additional ventilation (high CO2 level, manual command, etc.) the set point shall be set to maximum set point.

2.7 INPUT/OUTPUT INTERFACE:

A. Hardwired inputs and outputs may tie into the system through building or application specific controllers.

B. All input points and output points shall be protected such that shorting of the point to itself, to another point, or to ground will cause no damage to the controller. All input and output points shall be protected from voltage up to 24 V of any duration, such that contact with this voltage will cause no damage to the controller.

C. Binary inputs shall allow the monitoring of On/Off signals from remote devices. The binary inputs shall provide a wetting current of at least 12 mA to be compatible with commonly available control devices and shall be protected against the effects of contact bounce and noise. Binary inputs shall sense “dry contact” closure without external power (other than that provided by the controller) being applied.

D. Pulse accumulation input objects. This type of object shall conform to all the requirements of binary input objects and also accept up to 10 pulses per second for pulse accumulation.

E. Analog inputs shall allow the monitoring of low-voltage (0 to 10 VDC), current (4 to 20 mA), or resistance signals (thermistor, RTD). Analog inputs shall be compatible with—and field configurable to— commonly available sensing devices.

F. Binary outputs shall provide for On/Off operation or a pulsed low-voltage signal for pulse width modulation control. Binary outputs on building and custom application controllers shall have three-position (On/Off/Auto) override switches and status lights. Outputs shall be selectable for either normally open or normally closed operation.

G. Analog outputs shall provide a modulating signal for the control of end devices. Outputs shall provide either a 0 to 10 VDC, 4 to 20 mA or 0-20 PSI signal as required to provide proper control of the output device. Analog outputs on building or custom application controllers shall have status lights and a two-position (AUTO/MANUAL) switch and manually adjustable potentiometer for manual override. Analog outputs shall not exhibit a drift of greater than 0.4% of range per year.

H. Tri-State Outputs. Provide tri-state outputs (two coordinated binary outputs) for control of three-point floating type electronic actuators without feedback. Use of three-point floating devices shall be limited to zone control and terminal unit control applications (VVT units, duct-mounted heating coils, zone dampers, radiation, etc.). Control algorithms shall run the zone actuator to one end of its stroke once every 24 hours for verification of operator tracking.

I. System Object Capacity. The system size shall be expandable to at least twice the number of input/ output objects required for this project. Additional controllers (along with associated devices and wiring) shall be all that is necessary to achieve this capacity requirement. The operator interfaces installed for this project shall not require any hardware additions or software revisions in order to expand the system.

2.8 POWER SUPPLIES AND LINE FILTERING

A. Control transformers shall be UL listed. Furnish Class 2 current-limiting type or furnish over-current protection in both primary and secondary circuits for Class 2 service in accordance with NEC requirements. Limit connected loads to 80% of rated capacity.

B. DC power supply output shall match output current and voltage requirements. Unit shall be full-wave rectifier type with output ripple of 5.0 mV maximum peak-to-peak. Regulation shall be 1.0% line and load combined, with 100-microsecond response time for 50% load changes. Unit shall have built-in over-voltage and over-current protection and shall be able to withstand a 150% current overload for at least three seconds without trip-out or failure.

C. Unit shall operate between 0°C and 50°C (32°F and 120°F). EM/RF shall meet FCC Class B and VDE 0871 for Class B and MILSTD 810C for shock and vibration.

D. Line voltage units shall be UL recognized and CSA approved.

E. Power line filtering.

F. Provide transient voltage and surge suppression for all workstations and controllers either internally or as an external component. Surge protection shall have the following at a minimum:

G. Dielectric strength of 1000 volts minimum

H. Response time of 10 nanoseconds or less

I. Transverse mode noise attenuation of 65 dB or greater

J. Common mode noise attenuation of 150 dB or better at 40 Hz to 100 Hz.

2.9 AUXILIARY CONTROL DEVICES

A. GENERAL

1. Specified in this section are the following hard wired input/output devices connected to the Building Controller or ASC. Devices only required if specified by points list, control diagram or sequence of operation.
   a. Electric Damper Actuators
   b. Ball Valves
   c. Automatic Control Valves
   d. Airflow Measuring Stations
   e. Binary Temperature Devices
   f. Temperature Sensors
   g. Dew Point/Humidity Sensors
   h. Pressure Sensors
   i. Differential Pressure Switches
   j. Analog Water Level Sensors
   k. Water Leak Detection Systems
   l. Audio/Visual Alarm Units
   m. Indoor Air Quality (CO2/VOC) Space Sensors
   n. Relays
   o. Override Timers
   p. Current Transformers
   q. Voltage Transmitters
   r. Voltage Transformers
   s. Power Monitors
   t. Current Switches
   u. Pressure Electric Switches
   v. Electro-pneumatic Transducers
   w. Local Control panels
   x. Local User Display
   y. Electric Damper Actuators (where specified in points list)

B. General

1. The actuator shall have mechanical or electronic stall protection to prevent damage to the actuator throughout the rotation of the actuator.
2. Where shown, for power-failure/safety applications, an internal mechanical, spring-return mechanism shall be built into the actuator housing. Alternatively, an uninterruptible power supply (UPS) may be provided. On terminal unit valves actuators capacitor driven fail action is permitted.
3. Proportional actuators shall accept a 0 to 10 VDC or 0 to 20 mA control signal and provide a 2 to 10 VDC or 4 to 20 mA operating range.
4. All 24 VAC/VDC actuators shall operate on Class 2 wiring.

5. All actuators shall have an external manual gear release to allow manual positioning of the damper when the actuator is not powered. Spring-return actuators with more than 7 Nm (60 in.-lb) torque capacity shall have a manual crank for this purpose.
6. Electric actuators for emergency generator damper control shall be rated for 350 degree F. maximum operating temperature and capable to drive fully open and close within 15 seconds.

C. AIR FLOW MEASURING STATIONS (where specified in points list)
1. Fan Inlet Type:
   a. Air Handling Unit Manufacturer to provide airflow measuring stations where shown on the fan inlet. Fan Inlet flow stations will be provided with the air handling unit or fan manufacturer. See Spec Section 15XXX Custom Air handling units. Airflow traverse probes shall be suitable for mounting in the inlet bell(s) of the indicated fan.
   b. Probes shall be provided with the appropriate end support brackets for mounting in the inlet bell(s). Where fans are of dual inlet type, two sets of inlet probes must be provided.
   c. Fan inlet probes shall be provided with the fittings to allow for the connection of control tubing to the probe assemblies.
   d. Probes shall be capable of operating with an accuracy of 3% of actual volume over the fan operating range. A 4-20mA control signal with a linear out put reading the fan CFM shall be provided.
   e. Fan inlet probes shall be Tek-Air T-FP7000 or Paragon FI series.
2. Duct Mounted Type:
   a. This contractor to provide where indicated on the plans ductwork, airflow traverse probes of the insertion type, capable of continuously measuring air volume in the duct served. Duct mounted flow stations will be provided under this section and mounted by sheet metal contractor.
   b. Probes shall utilize multiple total and suction pressure measurement points, located along the length of the probe surface in accordance with ASHRAE recommendations for duct traversing.
   c. The probes shall provide measurement accuracy within ± 2% of actual velocity when used with the appropriate conversion formula. A 4-20mA control signal with a linear output reading the fan CFM shall be provided.
   d. Probes shall be of cylindrical cross section and shall indicate no more than a ± 3% percent deviation from the centerline velocity at a yaw angles up to 30 degrees.
   e. Probes shall be constructed of extruded aluminum, unless dictated otherwise by service requirements. Probes over sixteen inches long shall be supported on the insertion end.
   f. Probe quantities for each location shall be sufficient to meet ASHRAE recommendations.
   g. The pressure drop created by the traverse probes shall not be greater ten percent of the velocity pressure at the maximum design flow.
   h. The probes shall not amplify sound levels in the duct. The manufacturer shall provide submittal data indicating the developed differential pressure and pressure loss at the minimum and maximum design air flows for each duct location.
   i. Traverse probes shall be Tek-Air model T-FP5000 or Paragon FE type.
3. Outside Air Type:

a. Contractor to provide where indicated on the plans. Outside air applications will use the thermal dispersion airflow measurement flow stations for accurate flow at low air velocity. Linear 4-20mA flow transmitter will be used for inputting probes and transmitting air flow. Ebtron P series with Silver series transmitter or equal.

D. BINARY TEMPERATURE DEVICES (where specified in points list)

1. Line-voltage space thermostat:
   a. Line-voltage thermostats shall be bimetal-actuated, snap acting SPDT contact, enclosed, UL listed for electrical rating. The thermostat cover shall provide exposed set point adjustment knob. The thermostat shall operate within the 55°F to 85°F setpoint range, with 2°F maximum differential.
2. Low-temperature safety thermostat:
   a. Low-limit air stream thermostats shall be UL listed, vapor pressure type, with a sensing element of 20 ft. minimum length. Element shall respond to the lowest temperature sensed by any 1 ft. section. The low-limit thermostat shall be automatic reset, SPDT type.
3. Aquastat:
   a. Strap-on type thermostats shall be provided for low or high temperature limit service on hot water or steam condensate pipes. The thermostats shall be UL listed, with a liquid-filled bulb type sensing element and capillary tubing. The thermostat shall operate within the 20°F to 120°F, or 100°F to 240°F, setpoint range, with an adjustable 6°F differential.
   b. The low-limit thermostat shall be automatic reset, snap acting SPDT type with concealed set point adjustment.

E. TEMPERATURE SENSORS. (where specified in points list)

1. Provide the following instrumentation as required by the monitoring, control and optimization functions. All temperature sensors shall use platinum RTD elements only, nickel or silicon are not acceptable. All control signals shall be via a 4-20 mA loop. Where platinum RTD temperature sensors are available, thermistors shall not be used.
2. Room Temperature:

a.	Temperature monitoring range	+20/+120 F or +40/+90 F
b.	Output signal	4-20 mA
c.	Installation adjustments	none required
d.	Element	Platinum
e.	Factory calibration point	77 deg F
f.	Accuracy at calibration point	+0.5% at 77F

3. Liquid Immersion Temperature

a.	Temperature monitoring range	+30/+250 F
b.	Output signal	4-20 mA
c.	Installation adjustments	none required
d.	Element	Platinum
e.	Factory calibration point	32 deg F
f.	Accuracy at calibration point	+0.2% at 32F

4. Duct (Single Point) Temperature

a.	Temperature monitoring range	20/+120 F
b.	Output signal	4-20 mA
c.	Installation adjustments	none required

d.	Element	Platinum
e.	Factory calibration point	32 deg F
f.	Accuracy at calibration point	+0.2% at 32F

5. Duct (Averaging) Temperature

a.	Temperature monitoring range	20/+120 F
b.	Output signal	4-20 mA
c.	Installation adjustments	none required
d.	Element	Platinum
e.	Factory calibration point	32 deg F
f.	Accuracy at calibration point	+0.2% at 32F

6. Outside Air Temperature

a.	Temperature monitoring range	-58/+122 F
b.	Output signal	4-20 mA
c.	Installation adjustments	none required
d.	Element	Platinum
e.	Factory calibration point	32 deg F
f.	Accuracy at calibration point	+0.2% at 32F

F. DEW POINT/HUMIDITY SENSORS (where specified in points list)

1. Outside Air Dew Point Temperature

a.	Dew point monitoring range	-40/+115 F DP, 12% to 99% RH
b.	Output signal	4-20 mA
c.	Calibration adjustments	zero & span
d.	Factory calibration point	70 F
e.	Accuracy at calibration point	+2.0 Fdp

2. Room/duct Relative Humidity

a.	Sensor Humidity range	0 to 100%
b.	Operating temperature	15 F to +170 F
c.	Accuracy	+2% RH
d.	Sensing element	Capacitive sensor
e.	Output signal	4-20 mA DC
f.	Installation adjustments	zero & span
g.	Operating temperature	15 F to +170 F
h.	Voltage requirement	12-36 VDC

G. PRESSURE SENSORS (where specified in points list)

1. Air Static Pressure Sensor

a.	Duct Static range	-.5 to + 7.5"wg
b.	Accuracy	+ .05" w.g.
c.	Output signal	4 - 20 mA

d. Actual sensor used will be sized for its application so that it is accurate in the range it will be reading. (e.g. room -0.5- +0.5, fan static pressure 0-5.0", etc.)

H. DIFFERENTIAL PRESSURE SWITCHES. (where specified in points list)

1. Water Differential Pressure Switch

a. Differential pressure type switches (air or water service) shall be UL listed, SPDT snap-acting, pilot duty rated (125 VA minimum), NEMA 1 enclosure, with scale range and differential suitable for intended application or as shown.

b. The differential switches shall meet the following requirements:

c. Range 8 to 70 psi
d. Differential 3 psi
e. Maximum differential pressure 200 psi
f. Maximum pressure 325 psi

2. Air Differential Pressure Switch
   a. Differential pressure switches shall be diaphragm type, with die-cast aluminum housing and adjustable set point. Switch rating shall be a minimum 5 amps at 120 VAC. Switches shall be SPDT and be used for fan status if specified in the point schedule. Switch pressure range shall be suited for application. (e.g. filter 0-2.0", fan status 0-5.0", etc.)
   b. Differential pressure switches used for duct high static pressure shall be the manual reset type to avoid fan cycling in an over pressure situation.

I. WATER METERS (where specified in points list)
1. Provide ultra sonic water flow meters designed to strap on to the pipe. Meter flow range shall be -40 to +40 feet/second for liquid service. Accuracy shall be +/-0.5% of rate. Repeatability shall be .10% of rate. A D.C. powered transmitter shall be mounted on a wall within 25 feet of the flow meter and be tagged for its use. Flow transmitter output shall be 4-20 mA linear with flow. The water flow meter shall be Emco “Sono Trak” ST-30. Insulator will provide removable insulation where transducers are mounted to pipe for service.

J. VORTEX SHEDDING FLOW METERS (where specified in points list)
1. Provide vortex shedding flow meter for steam metering locations. Meter shall be pressure and temperature compensated, rated for service conditions and be manufactured by Sparling or approved equal. Provide remote readout of pressure, flow, MLb/Hr and total MLb.
2. Coordinate location to provide proper straight run of pipe, pipe size, etc.
3. Power 24VDC power supply as required from Emergency source.
4. BMS system shall monitor Mlb/Hr, Mlb total, pressure and temperature values.

K. INDOOR AIR QUALITY (CO2/VOC) SENSORS (where specified in points list)
1. Provide indoor air quality sensors to monitor Carbon Dioxide (CO2) and Volatile Organic Compound (VOC) levels.
2. The sensors shall be of microprocessor-based photoacoustic type with heated stannic dioxide semiconductor.
3. The CO2 sensors shall have no more than 1% drift during the first year of operation and minimal drift thereafter so that no calibration will be required.
4. The units shall be wall or duct mounted type as indicated on plans and in the sequence of operation.
5. Wall mounted sensors shall be provided with white plastic cover, without LED indicators.
6. Duct mounted sensors shall be provided with LED indicators in a dust proof plastic housing with transparent cover.
7. The VOC sensor shall have automatic self calibrating capability to ensure accuracy.
8. The sensor shall meet the following requirements:
   a. Operating voltage: 24 VAC +/- 20%
   b. Frequency: 50/60 Hz
   c. Power consumption: max. 6 VA

d. CO2 measuring range: 0 – 2000 ppm
e. Tolerance: +/- 100 ppm
f. Output: 0 – 10 VAC
g. Calibration: none required
h. VOC measurement range: 0 – 10 V VOC
i. Permissible air velocity in duct: <26.2 Ft/s.
j. The sensors shall be model: Siemens QPA63 Series.

L. RELAYS.
1. Control relays shall be UL listed plug-in type with dust cover and LED "energized" indicator. Contact rating, configuration, and coil voltage shall be suitable for application.
2. Time delay relays shall be UL listed solid-state plug-in type with adjustable time delay. Delay shall be adjustable ±200% (minimum) from set point shown on plans. Contact rating, configuration, and coil voltage shall be suitable for application. Provide NEMA 1 enclosure when not installed in local control panel.

M. OVERRIDE TIMERS. (where specified in points list)
1. Override timers shall be spring-wound line voltage, UL Listed, with contact rating and configuration as required by application. Provide 0-to-6-hour calibrated dial unless otherwise specified. Timer shall be suitable for flush mounting on control panel face and located on local control panels or where shown.

N. CURRENT TRANSMITTERS. (where specified in points list)
1. AC current transmitters shall be the self-powered, combination split-core current transformer type with built-in rectifier and high-gain servo amplifier with 4 to 20 mA two-wire output. Unit ranges shall be 10 A, 20 A, 50 A, 100 A, 150 A, and 200 A full scale, with internal zero and span adjustment and ±1% full-scale accuracy at 500 ohm maximum burden.
2. Transmitter shall meet or exceed ANSI/ISA S50.1 requirements and shall be UL/CSA Recognized.
3. Unit shall be split-core type for clamp-on installation on existing wiring.

O. CURRENT TRANSFORMERS. (where specified in points list)
1. AC current transformers shall be UL/CSA Recognized and completely encased (except for terminals) in approved plastic material.
2. Transformers shall be available in various current ratios and shall be selected for ±1% accuracy at 5 A full-scale output.
3. Transformers shall be fixed-core or split-core type for installation on new or existing wiring, respectively.

P. VOLTAGE TRANSMITTERS. (where specified in points list)
1. AC voltage transmitters shall be self-powered single-loop (two-wire) type, 4 to 20 mA output with zero and span adjustment.
2. Ranges shall include 100 to 130 VAC, 200 to 250 VAC, 250 to 330 VAC, and 400 to 600 VAC full-scale, adjustable, with ±1% full-scale accuracy with 500 ohm maximum burden.
3. Transmitters shall be UL/CSA Recognized at 600 VAC rating and meet or exceed ANSI/ISA S50.1 requirements.

Q. VOLTAGE TRANSFORMERS. (where specified in points list)

1. AC voltage transformers shall be UL/CSA Recognized, 600 VAC rated, complete with built-in fuse protection.
2. Transformers shall be suitable for ambient temperatures of 4°C to 55°C (40°F to 130°F) and shall provide ±0.5% accuracy at 24 VAC and a 5 VA load.
3. Windings (except for terminals) shall be completely enclosed with metal or plastic material.

R. POWER MONITORS. (where specified in points list)
1. Power monitors shall be the three-phase type furnished with three-phase disconnect/shorting switch assembly, UL Listed voltage transformers, and UL Listed split-core current transformers.
2. They shall provide a selectable rate pulse output for kWh reading and a 4 to 20 mA output for kW reading. They shall operate with 5 A current inputs with a maximum error of ±2% at 1.0 power factor or ±2.5% at 0.5 power factor.

S. CURRENT SWITCHES. (where specified in points list)
1. Current-operated switches shall be self-powered, solid-state with adjustable trip current. The switches shall be selected to match the current of the application and output requirements of the DDC system.

T. PRESSURE-ELECTRIC (PE) SWITCHES (where specified in points list)
1. Shall be metal or neoprene diaphragm actuated, operating pressure rated 0-175 kPa (0-25 psig), with calibrated scale set point range of 14-125 kPa (2-18 psig) minimum, UL listed.
2. Provide one or two-stage switch action SPDT, DPST, or DPDT, as required by application. Electrically rated for pilot duty service (125 VA minimum) and/or for motor control.
3. Shall be open type (panel-mounted) or enclosed type for remote installation. Enclosed type shall be NEMA 1 unless otherwise specified.
4. Shall have a permanent indicating gauge on each pneumatic signal line to PE switches.

U. ELECTRO-PNEUMATIC (E/P) TRANSDUCERS. (where specified in points list)
1. Electronic/pneumatic transducer shall provide a proportional 20 to 100 kPa (3 to 15 psig) output signal from either a 4 to 20 mA or 0 to 10 VDC analog control input.
2. E/P transducer shall be equipped with the following features:
   a. Separate span and zero adjustments
   b. Manual output adjustments
   c. Pressure gauge assembly
   d. Feedback loop control
   e. Air consumption of 0.05 L/s (0.1 scfm) at mid-range

V. LOCAL CONTROL PANELS.
1. All indoor control cabinets shall be fully enclosed NEMA 1 construction with (hinged door) key-lock latch and removable sub panels. A single key shall be common to all field panels and sub panels.
2. Interconnections between internal and face mounted devices shall be prewired with color-coded stranded conductors neatly installed in plastic troughs and/or tie-wrapped. Terminals for field connections shall be UL listed for 600 volt service, individually identified per control/ interlock drawings, with adequate clearance for field wiring.

Control terminations for field connection shall be individually identified per control drawings.

3. Provide ON/OFF power switch with overcurrent protection for control power sources to each local panel.

2.10 COMMUNICATION AND CONTROL WIRING

A. General:
1. Provide copper wiring, plenum cable, and raceways as specified in the Division 26 - Electrical unless otherwise noted.
2. All insulated wire to be copper conductors, UL labeled for 90°C minimum service.

B. Wire Sizing and Insulation
1. Wiring shall comply with minimum wire size and insulation based on services listed below:

	Service	Minimum Gage/Type	Insulation Class
a.	Service	Minimum Gage/Type	Insulation Class
b.	AC 24V Power	12 Ga Solid	600 Volt
c.	DC 24V Power	10 Ga Solid	600 Volt
d.	Class 1	14 Ga Stranded	600 Volt
e.	Class 2	18 Ga Stranded	300 Volt
f.	Class 3	18 Ga Stranded	300 Volt

2. Provide plenum-rated cable when open cable is permitted in supply or return air plenum where allowed per execution specifications defined in Paragraph 3.07

C. Control Wiring:
1. Digital Input/Output wiring shall use Class 2 twisted pair, insulated.
2. Analog inputs shall use Class 2 twisted shielded pair, insulated and jacketed and require a grounded shield.
3. Actuators with tri-state control shall use 3 conductor with same characteristics

D. Communication Wiring
1. Ethernet Cable shall be minimum CAT5
2. Secondary level network shall be 24 gage, TSP, low capacitance cable

E. Approved Cable Manufacturers:
1. Wiring from the following manufacturers which meet the above criteria shall be acceptable:
   a. Anixter
   b. Belden

PART 3 - EXECUTION

3.1 EXAMINATION:

A. The project plans shall be thoroughly examined for control device and equipment locations. Any discrepancies, conflicts, or omissions shall be reported to the architect/engineer for resolution before rough-in work is started.

B. The contractor shall inspect the site to verify that equipment may be installed as shown. Any discrepancies, conflicts, or omissions shall be reported to the engineer for resolution before rough-in work is started..

3.2 PROTECTION:

A. The contractor shall protect all work and material from damage by its employees and/or subcontractors and shall be liable for all damage thus caused.

B. The contractor shall be responsible for its work and equipment until finally inspected, tested, and accepted.

3.3 COORDINATION:

A. Site
1. The project coordination between trades is the responsibility of the prime contractor who is the one tier higher contractual partner such as mechanical contractor, general contractor, construction manager, owner or owner's representative as applicable.
2. The controls contractor shall follow prime contractor's job schedule and coordinate all project related activities through the prime contactor except otherwise agreed or in minor job site issues. Reasonable judgment shall be applied.
3. Where the work will be installed in close proximity to, or will interfere with, work of other trades, the contractor shall assist in working out space conditions to make a satisfactory adjustment.
4. If the contractor deviates form the job schedule and installs work without coordinating with other trades, so as to cause interference with work of other trades, the contractor shall make the necessary changes to correct the condition without extra charge.
5. Coordinate and schedule work with all other work in the same area, or with work that is dependent upon other work, to facilitate mutual progress.

B. Submittals.
1. Refer to the "Submittals" article in Part 1 of this specification for requirements.

C. Test and Balance
1. The contractor shall furnish a single set of all tools necessary to interface to the control system for test and balance purposes.

D. Life Safety
1. Duct smoke detectors required for air handler shutdown are supplied under Section 28 31 00 – Fire Detection and Alarm . That contractor shall interlock smoke detectors to air handlers for shutdown as described in Part 3, "Sequences of Operation." That contractor will also provide auxiliary contacts for when necessary to monitor fire alarm status.
2. Fire/smoke dampers and actuators required for fire rated walls are provided under Division 23 – Heating, Ventilating and Air Conditioning. For control and interlock of these dampers refer to Section 28 31 00 – Fire Detection and Alarm.

E. Coordination with controls specified in other sections or divisions.

1. Other sections and/or divisions of this specification include controls and control devices that are to be part of or interfaced to the control system specified in this section. These controls shall be integrated into the system and coordinated by the contractor as follows:
   a. All communication media and equipment shall be provided as specified in Part 2, "Communication" of this specification.
   b. Each supplier of controls product is responsible for the configuration, programming, startup, and testing of that product to meet the sequences of operation described in this section. This contractor will monitor and adjust their parameters only through the system specified here.
   c. The Contractor shall coordinate and identify any incompatibility issues that arise between the control products provided under this section and those provided under other sections or divisions of this specification.
   d. Each supplier of controls product is responsible for providing software database for properly configuring the communications to that system 8 weeks prior to scheduled start-up. Contractor will notify all appropriate parallel contractors of this need.
   e. The contractor is responsible for the interface of control products provided by multiple suppliers when the supplier has a BacNet or another acceptable open protocol device. Systems to be integrated will be shown on the drawings, points list, control details or sequence of operation.

3.4 GENERAL WORKMANSHIP:

A. Install equipment, piping, and wiring/raceway parallel to building lines (i.e., horizontal, vertical, and parallel to walls) wherever possible.

B. Provide sufficient slack and flexible connections to allow for vibration of piping and equipment.

C. Install all equipment in readily accessible locations as defined by Chapter 1, Article 100, Part A of the National Electrical Code (NEC).

D. Verify integrity of all wiring to ensure continuity and freedom from shorts and grounds.

E. All equipment, installation, and wiring shall comply with acceptable industry specifications and standards for performance, reliability, and compatibility and be executed in strict adherence to local codes and standard practices.

3.5 FIELD QUALITY CONTROL:

A. Contractor shall have a quality manager on staff to inspect the project execution and to enforce quality standards.

B. All work, materials, and equipment shall comply with the rules and regulations of applicable local, state, and federal codes and ordinances as identified in Part 1 of this specification.

C. Contractor shall continually monitor the field installation for code compliance and quality of workmanship.

D. Contractor shall have work inspected by local and/or state authorities having jurisdiction over the work.

3.6 WIRING:

A. All control and interlock wiring shall comply with national and local electrical codes and Division 26 – Electrical of this specification. Where the requirements of this section differ from those in Division 26 – Electrical, the requirements of this section shall take precedence.

B. All NEC Class 1 (line voltage) wiring shall be UL Listed in approved conduit according to NEC and Division 26 – Electrical requirements.

C. All low-voltage wiring shall meet NEC Class 2 requirements. (Low-voltage power circuits shall be sub fused when required to meet Class 2 current limit.)

D. Where NEC Class 2 (current-limited) wires are in concealed and accessible locations, including ceiling return air plenums, approved cables not in conduit may be used provided that cables are UL Listed for the intended application. For example, cables used in ceiling plenums shall be UL Listed specifically for that purpose.

E. All wiring in mechanical, electrical, or service rooms—or where subject to mechanical damage— shall be installed in EMT conduit.

F. Do not install Class 2 wiring in conduit containing Class 1 wiring. Boxes and panels containing high voltage wiring and equipment may not be used for low-voltage wiring except for the purpose of interfacing the two (e.g., relays and transformers).

G. Where plenum rated cable is run exposed, wiring is to be run parallel along a surface or perpendicular to it and neatly tied at 3 m (10 ft) intervals.

H. Where plenum rated cable is used without conduit, it shall be supported from or anchored to structural members. Cables can be supported by or anchored to ductwork or ceiling suspension systems. Cables can not be supported by conduit or sprinkler piping.

I. All wire-to-device connections shall be made at a terminal block or wire nut. All wire-to-wire connections shall be at a terminal strip or wire nut.

J. All wiring within enclosures shall be neatly bundled and anchored to permit access and prevent restriction to devices and terminals.

K. Maximum allowable voltage for control wiring shall be 120 V. If only higher voltages are available, the contractor shall provide step-down transformers or interposing relays.

L. All plenum rated wiring shall be installed as continuous lengths, with no splices permitted between termination points

M. All wiring in conduit shall be installed as continuous lengths, with no splices permitted between termination points or junction boxes.

N. Maintain fire rating at all penetrations. Install plenum wiring in sleeves where it passes through walls and floors.

O. Size and type of conduit and size and type of wire shall be the responsibility of the contractor, in keeping with the manufacturer's recommendations and NEC requirements, except as noted elsewhere.

P. Include one pull string in each conduit ¾ in. or larger.

Q. Control and status relays are to be located in designated enclosures only. These enclosures can include packaged equipment control panel enclosures unless they also contain Class 1 starters.

R. Conceal all conduit, except within mechanical, electrical, or service rooms. Install conduit to maintain a minimum clearance of 15 cm (6 in.) from high-temperature equipment (e.g., steam pipes or flues).

S. Secure conduit with conduit clamps fastened to the structure and spaced according to code requirements. Conduit and pull boxes may not be hung on flexible duct strap or tie rods. Conduits may not be run on or attached to ductwork.

T. Adhere to this specification's Division 26 – Electrical requirements where conduit crosses building expansion joints.

U. The Contractor shall terminate all control and/or interlock wiring and shall maintain updated (as-built) wiring diagrams with terminations identified at the job site.

V. Flexible metal conduits and liquid-tight, flexible metal conduits shall not exceed 1 m (3 ft) in length and shall be supported at each end.. In areas exposed to moisture, including chiller and boiler rooms, liquid-tight, flexible metal conduits shall be used.

W. Conduit must be adequately supported, properly reamed at both ends, and left clean and free of obstructions. Conduit sections shall be joined with couplings (according to code). Terminations must be made with fittings at boxes, and ends not terminating in boxes shall have bushings installed.

3.7 COMMUNICATION WIRING:

A. The contractor shall adhere to the items listed in the "Wiring" article in Part 3 of the specification.

B. All cabling shall be installed in a neat and workmanlike manner. Follow manufacturer's installation recommendations for all communication cabling.

C. Do not install communication wiring in raceway or junction boxes containing Class 1 or other Class 2 wiring from another trade such as fire alarm or security.

D. Maximum pulling, tension, and bend radius for cable installation, as specified by the cable manufacturer, shall not be exceeded during installation.

E. Contractor shall verify the integrity of the entire network following the cable installation. Use appropriate test measures for each particular cable.

F. All runs of communication wiring shall be unspliced length when that length is commercially available.

G. All communication wiring shall be labeled to indicate origination and destination data.

H. Grounding of coaxial cable shall be in accordance with NEC regulations article on "Communications Circuits, Cable, and Protector Grounding."

3.8 INSTALLATION OF SENSORS:

A. General:
1. Install sensors in accordance with the manufacturer's recommendations.
2. Mount sensors rigidly and adequately for the environment within which the sensor operates.
3. Room temperature sensors shall be installed on concealed junction boxes properly supported by the wall framing.
4. All wires attached to sensors shall be air sealed in their raceways or in the wall to stop air transmitted from other areas affecting sensor readings.
5. Sensors used in mixing plenums shall be of the averaging type.
6. Low-limit sensors when specifically called out for use in mixing plenums shall be installed in a serpentine manner horizontally across the full face of the coil.
7. All pipe-mounted temperature sensors shall be installed in wells. Install all liquid temperature sensors with heat-conducting fluid in thermal wells.
8. Install outdoor air temperature sensors on north wall, complete with sun shield at designated location.

B. Room Instrument Mounting.(where specified)
1. Room instruments, including but not limited to wall mounted thermostats and sensors located in occupied spaces shall be mounted at the same height as the light switches to provide a uniform look. Drawing notes take precedence to this height requirement.

C. Temperature Limit Switch.(where specified)
1. A temperature limit switch (Low Temperature Detector) shall be provided to sense the temperature.
2. A sufficient number of temperature limit switches shall be installed to provide complete coverage of the duct section.
3. Manual reset limit switches shall be installed in approved, accessible locations where they can be reset easily.
4. The temperature limit switch sensing element shall be installed in a serpentine pattern and in accordance with the manufacturer's installation instructions.
5. Each bend shall be supported with a capillary clip. Provide 3 m of sensing element for each 1 m^2 (1 ft of sensing element for each 1 ft^2) of coil area.

D. Averaging Temperature Sensing Elements.(where specified)
1. Sensing elements shall be installed in a serpentine pattern.

2. Averaging sensors shall be installed in a serpentine manner vertically across the duct. Each bend shall be supported with a capillary clip.

E. Outside Air Flow Measuring Stations (AFMS) .(where specified)
1. Outside Air AFMS's shall be located downstream from the Outside Air filters.
2. Pitot Tube type AFMS shall not be used if the expected velocity measurement is below 3.5 m/s (700 fpm) [or for outside airflow measurements].

F. Differential air static pressure. (where specified in point list)
1. Supply Duct Static Pressure: Pipe the high-pressure tap to the duct using a pitot tube. Pipe the low-pressure port to a ceiling tile in a common hallway.
2. Return Duct Static Pressure: Pipe the high-pressure tap to the duct using a pitot tube. Pipe the low-pressure port to a ceiling tile in a common hallway.
3. Building Static Pressure: Pipe the low-pressure port of the pressure sensor to the static pressure port located on the outside of the building through a high-volume accumulator. Pipe the high-pressure port to a ceiling tile in a common hallway.

G. Water Differential pressure sensors. (where specified in point list)
1. Differential pressure sensors shall be installed with valved taps into the piping to ensure serviceability without draining the system
2. Sensors shall be mounted with bleed valves
3. After sensor installation any air shall be eliminated using the bleed valves to ensure reading accuracy
4. The sensors shall be located to ensure accessibility

H. Relative Humidity Sensors .(where specified)
1. Relative humidity sensors in supply air ducts shall be installed at least 3m (10 feet) downstream of humidity injection elements.

I. Flow Switch .(where specified)
1. Use manufacturers designated paddle for pipe diameter.
2. Adjust flow switch in accordance with manufacturer's instructions.
3. This contractor only responsible for identifying the location of the switch. Piping contractor installs the switch on the pipe.

3.9 WIRELESS TRANSCEIVER INSTALLATION. (WHERE SPECIFIED):

A. Mount transceivers in a grid like pattern not exceeding more than 25 – 100 feet line of sight between devices. Location of each transceiver shall be optimally chosen to get the best line of sight between it and at least two of its neighbors.

B. Transceivers may be mounted in the plenum space. Transceivers mounted in a metal enclosure shall utilize a remote mount antenna attached outside the metal enclosure to maintain adequate signal strength.

C. All transceiver antennas must be oriented in the vertical plane for proper RF communication.

D. Once installed ensure good communication is taking place between each device and at least two of its neighbors. Install extra transceivers if necessary to act as routers\repeaters for isolated devices with poor communication to the network.

E. Contractor shall provide a report to the owner or owner's representative illustrating good communication between all devices on the wireless network.

3.10 ACTUATORS:

A. Mount and link control damper actuators according to manufacturer's instructions.
   1. To compress seals when spring-return actuators are used on normally closed dampers, power actuator to approximately 5° open position, manually close the damper, and then tighten the linkage.
   2. Check operation of damper/actuator combination to confirm that actuator modulates damper smoothly throughout stroke to both open and closed positions.
   3. Damper manufacturer shall provide all mounting hardware and linkages for actuator installation.

B. Electric/Electronic
   1. Dampers: Actuators shall be direct-mounted on damper shaft or jackshaft unless shown as a linkage installation. For low-leakage dampers with seals, the actuator shall be mounted with a minimum 5° available for tightening the damper seals. Actuators shall be mounted following manufacturer's recommendations.
   2. Valves: Actuators shall be connected to valves with adapters approved by the actuator manufacturer. Actuators and adapters shall be mounted following the actuator manufacturer's recommendations.

3.11 WARNING LABELS AND IDENTIFICATION TAGS

A. Equipment and Device labeling:
   1. Labels and tags shall be keyed to the unique identifiers shown on the As-Built drawings.
   2. All Enclosures and DDC Hardware shall be labeled.
   3. Airflow measurement arrays shall be tagged to show flow rate range for signal output range, duct size, and pitot tube AFMS flow coefficient.
   4. Labels exterior to protective enclosures shall be engraved plastic and mechanically attached to the DDC panels.
   5. Labels inside protective enclosures may be attached using adhesive, but shall not be hand written.
   6. Identify all other control components with p-touch labels. All plug-in components shall be labeled such that removal of the component does not remove the label.
   7. Identify room sensors relating to terminal box or valves in permanent ink inside the door of the sensor.
   8. Manufacturers' nameplates and UL or CSA labels are to be visible and legible after equipment is installed.

B. Identification of Tubing and Wiring
   1. All wiring and cabling including that within factory-fabricated panels shall be labeled at each end within 5 cm (2 in.) of termination with the DDC address or termination number.

2. Permanently label or code each point of field terminal strips to show the instrument or item served..

3.12 IDENTIFICATION OF HARDWARE AND WIRING:

A. All wiring and cabling, including that within factory-fabricated panels shall be labeled at each end within 5 cm (2 in.) of termination with the DDC address or termination number.

B. Permanently label or code each point of field terminal strips to show the instrument or item served.

C. Identify control panels with minimum 1 cm (½ in.) letters on laminated plastic nameplates.

D. Identify room sensors relating to terminal box or valves with permanent ink inside the door of the sensor.

E. Manufacturers' nameplates and UL or CSA labels are to be visible and legible after equipment is installed.

F. Identifiers shall match record documents.

3.13 PROGRAMMING:

A. Provide sufficient internal memory for the specified sequences of operation and trend logging. There shall be a minimum of 25% of available memory free within the primary controller for future use.

B. Point Naming: System point names shall be modular in design, allowing easy operator interface without the use of a written point index. Point Naming standard shall be agreed upon between owner and BAS contractor prior to any programming being written. Refer to Submittals section in the General Section.

C. Software Programming
1. Provide programming for the system and adhere to the sequences of operation provided. The contractor also shall provide all other system programming necessary for the operation of the system, but not specified in this document. Imbed into the control program sufficient comment statements to clearly describe each section of the program. The comment statements shall reflect the language used in the sequences of operation and be of different font and color in text editor. Use the appropriate technique based on one of the following programming types:
   a. Text-based:
   b. Must provide actions for all possible situations
   c. Must be modular and structured
   d. Must be commented
   e. Must provide line by line programming and compilation wizard to allow for ease of editing.

D. Operator Interface

1. Standard graphics—Provide graphics for all mechanical systems and floor plans of the building (architect is responsible for providing floor plans of job to the contractor). This includes each chilled water system, hot water system, chiller, boiler, air handler, and all terminal equipment. Point information on the graphic displays shall dynamically update. Show on each graphic all input and output points for the system. Also show relevant calculated points such as set points.
2. Show terminal equipment information on a "graphic" summary table. Provide dynamic information for each point shown.
3. The contractor shall provide all the labor necessary to install, initialize, start up, and troubleshoot all operator interface software and its functions as described in this section. This includes any operating system software, the operator interface database, and any third-party software installation and integration required for successful operation of the operator interface.
4. Contractor shall provide necessary programming to create all reports referred to in Part 2 Operator Interface Software

3.14 CONTROL SYSTEM COMMISSIONING

A. Perform a two-phase commissioning procedure consisting of field I/O calibration and commissioning, system commissioning and integrated system program commissioning. Document all commissioning information on commissioning data sheets that shall be submitted prior to acceptance testing. Commissioning work that requires shutdown of system or deviation from normal function shall be performed when the operation of the system is not required. The commissioning must be coordinated with the owner and construction manager to ensure systems are available when needed. Notify the operating personal in writing of the testing schedule so that authorized personnel from the owner and construction manager are present throughout the commissioning procedure.

B. Phase I – Field I/O Calibration and Commissioning
   1. Verify that each control panel has been installed according to plans, specifications and approved shop drawings. Calibrate, test, and have signed off each control sensor and device. Contractor will fill out daily reports with the general contractor when this work is being done so that the general contractor can notify the owner if they want to review this work. Contractor will provide a detailed commissioning report showing that this work was done. Commissioning to include, but not be limited to:
      a. Sensor accuracy at 10, 50 and 90% of range. This will be done at the factory prior to field installation. Certificate will be provided to owner during commissioning process.
      b. Sensor range.
      c. Verify analog limit and binary alarm reporting.
      d. Point value reporting.
      e. Binary alarm and switch settings.
      f. Actuator and positioned spring ranges if pneumatic actuation is utilized.
      g. Fail safe operation on loss of control signal, pneumatic air, electric power, network communications, etc.

C. Phase II – System Commissioning
   1. Each BMS program shall be put on line and commissioned. The contractor shall, in the presence of the owner, his engineer or their designated representative, demonstrate each

programmed sequence of operation and compare the results in writing. In addition, each control loop shall be tested to verify proper response and stable control, within specified accuracy. System program test results shall be recorded on commissioning data sheets and submitted for record. Any discrepancies between the specification and the actual performance will be immediately rectified and re-tested.

2. The demonstration process shall follow that approved in Phase 1. The approved checklists and forms shall be completed for all systems as part of the demonstration.
3. The contractor shall provide at least one person equipped with two-way communication and shall demonstrate actual field operation of each control process for all modes of operation including day, night, occupied, unoccupied, fire/smoke alarm, seasonal changeover, and power failure modes. The purpose is to demonstrate the response, and action of every point and system while under control. Any test equipment required to prove the proper operation shall be provided by and operated by the contractor.
4. Demonstrate compliance with sequences of operation through all modes of operation.
5. Demonstrate complete operation of operator interface.
6. Additionally, the following items shall be demonstrated:
   a. DDC loop response. The contractor shall supply trend data output in a graphical form showing the step response of each DDC loop. The test shall show the loop's response to a change in set point, which represents a change of actuator position of at least 25% of its full range. The sampling rate of the trend shall be from 10 seconds to 3 minutes, depending on the speed of the loop. The trend data shall show for each sample the set point, actuator position, and controlled variable values. Any loop that yields unreasonably under-damped or over-damped control shall require further tuning by the Contractor.
   b. Demand limiting (if specified in sequence). The contractor shall supply a trend data output showing the action of the demand-limiting algorithm. The data shall document the action on a minute-by-minute basis over at least a 30-minute period. Included in the trend shall be building Kw, demand limiting set point, and the status of sheddable equipment outputs.
   c. Optimum start/stop(if specified in sequence). The contractor shall supply a trend data output showing the capability of the algorithm. The change-of value or change-of-state trends shall include the output status of all optimally started and stopped equipment, as well as temperature sensor inputs of affected areas.
   d. Operational logs for each system that indicate all set points, operating points, valve positions, mode, and equipment status shall be submitted to the architect/engineer. These logs shall cover three 48-hour periods and have a sample frequency of not more than 10 minutes. The logs shall be provided in both printed and electronic formats.
7. Any tests that fail to demonstrate the operation of the system shall be repeated at a later date. The contractor shall be responsible for any necessary repairs or revisions to the hardware or software to successfully complete all tests.

D. Acceptance
1. All tests described in this specification shall have been performed to the satisfaction of both the Engineer and owner prior to the acceptance of the control system as meeting the requirements of completion. Any tests that cannot be performed due to circumstances beyond the control of the contractor may be exempt from the completion requirements if stated as such in writing by the Engineer. Such tests shall then be performed as part of the warranty.

2. The system shall not be accepted until all forms and checklists completed as part of the demonstration are submitted and approved for both phase I and phase II

3.15 CLEANING

A. The contractor shall clean up all debris resulting from their activities daily. The contractor shall remove all cartons, containers, crates, etc., under his/her control as soon as their contents have been removed. Waste shall be collected and placed in a designated location.

B. At the completion of work in any area, the contractor shall clean all work, equipment, etc., keeping it free from dust, dirt, and debris, etc.

C. At the completion of work, all equipment furnished under this section shall be checked for paint damage, and any factory-finished paint that has been damaged shall be repaired to match the adjacent areas. Any cabinet or enclosure that has been deformed shall be replaced with new material and repainted to match the adjacent areas.

3.16 TRAINING

A. The Contractor shall provide competent instructors to give full instruction to designated personnel in the adjustment, operation and maintenance of the system installed. Factory employed/certified instructors shall be thoroughly familiar with all aspects of the subject matter they are to teach. All training shall be held during normal work hours of 8:00 a.m. to 4:30 p.m. weekdays. All sessions will be scheduled three weeks in advance. If no one shows up after one hour from the start time, that session will be forfeited.

B. Provide a minimum of four (4) on-site, on-line, or classroom training sessions throughout the contract period for personnel designated by the owner. Each session shall be a minimum of four (4) hours each.

C. Provide one additional training/follow-up session at 6 months following building's turnover. This session shall be four hours long and must be coordinated with the building owner to review operation and any seasonal adjustments.

D. The instructor(s) shall be factory-trained instructors experienced in presenting this material.

END OF SECTION 230900

SECTION 233113 - METAL DUCTS

PART 1 - GENERAL

1.1 RELATED DOCUMENTS

A. Drawings and general provisions of the Contract, including General and Supplementary Conditions and Division 01 Specification Sections, apply to this Section.

1.2 SUMMARY

A. Section Includes:
1. Single-wall rectangular ducts and fittings.
2. Single-wall round and flat-oval ducts and fittings.
3. Sheet metal materials.
4. Duct liner.
5. Sealant and gaskets.
6. Hangers and supports.
7. Seismic-restraint devices.

B. Related Sections:
1. Section 230593 "Testing, Adjusting, and Balancing for HVAC" for testing, adjusting, and balancing requirements for metal ducts.
2. Section 233300 "Air Duct Accessories" for dampers, sound-control devices, duct-mounting access doors and panels, turning vanes, and flexible ducts.

1.3 PERFORMANCE REQUIREMENTS

A. Delegated Duct Design: Duct construction, including sheet metal thicknesses, seam and joint construction, reinforcements, and hangers and supports, shall comply with SMACNA's "HVAC Duct Construction Standards - Metal and Flexible" and performance requirements and design criteria indicated in "Duct Schedule" Article.

B. Structural Performance: Duct hangers and supports and seismic restraints shall withstand the effects of gravity and seismic loads and stresses within limits and under conditions described in SMACNA's "HVAC Duct Construction Standards - Metal and Flexible" SMACNA's "Seismic Restraint Manual: Guidelines for Mechanical Systems."
1. Seismic Hazard Level A: Seismic force to weight ratio, 0.48.

C. Airstream Surfaces: Surfaces in contact with the airstream shall comply with requirements in ASHRAE 62.1.

1.4 ACTION SUBMITTALS

A. Submittals shall be formatted per Section 230000 "General Mechanical Requirements". The manufacturer shall resubmit the specification section showing compliance with each respective paragraphs and specified items and features in that particular specification section. All **exceptions** shall be clearly identified by referencing respective paragraph and other requirements. Next to each specification item, indicate the following:
   1. "No Exception Taken".
   2. "Exception". All exceptions shall be clearly identified by referencing respective paragraph and other requirements along with proposed alternative.

B. Product Data: For each type of the following products:
   1. Liners and adhesives.
   2. Sealants and gaskets.
   3. Seismic-restraint devices.

C. Shop Drawings:
   1. Fabrication, assembly, and installation, including plans, elevations, sections, components, and attachments to other work.
   2. Factory- and shop-fabricated ducts and fittings.
   3. Duct layout indicating sizes, configuration, liner material, and static-pressure classes.
   4. Elevation of top of ducts.
   5. Dimensions of main duct runs from building grid lines.
   6. Fittings.
   7. Reinforcement and spacing.
   8. Seam and joint construction.
   9. Penetrations through fire-rated and other partitions.
   10. Equipment installation based on equipment being used on Project.
   11. Locations for duct accessories, including dampers, turning vanes, and access doors and panels.
   12. Hangers and supports, including methods for duct and building attachment, seismic restraints, and vibration isolation.

D. Delegated-Design Submittal:
   1. Sheet metal thicknesses.
   2. Joint and seam construction and sealing.
   3. Reinforcement details and spacing.
   4. Materials, fabrication, assembly, and spacing of hangers and supports.
   5. Design Calculations: Calculations, including analysis data signed and sealed by the licensed structural engineer responsible for their preparation for selecting hangers and supports and seismic restraints.

1.5 INFORMATIONAL SUBMITTALS

A. Coordination Drawings: Plans, drawn to scale, on which the following items are shown and coordinated with each other, using input from installers of the items involved:
   1. Duct installation in congested spaces, indicating coordination with general construction, building components, and other building services. Indicate proposed changes to duct layout.

2. Suspended ceiling components.
3. Structural members to which duct will be attached.
4. Size and location of initial access modules for acoustical tile.
5. Penetrations of smoke barriers and fire-rated construction.
6. Items penetrating finished ceiling including the following:
   a. Lighting fixtures.
   b. Air outlets and inlets.
   c. Speakers.
   d. Sprinklers.
   e. Access panels.
   f. Perimeter moldings.

B. Welding certificates.

C. Field quality-control reports.

1.6 QUALITY ASSURANCE

A. Welding Qualifications: Qualify procedures and personnel according to the following:
   1. AWS D1.1/D1.1M, "Structural Welding Code - Steel," for hangers and supports.
   2. AWS D1.2/D1.2M, "Structural Welding Code - Aluminum," for aluminum supports.
   3. AWS D9.1M/D9.1, "Sheet Metal Welding Code," for duct joint and seam welding.

B. ASHRAE Compliance: Applicable requirements in ASHRAE 62.1, Section 5 - "Systems and Equipment" and Section 7 - "Construction and System Start-up."

C. ASHRAE/IESNA Compliance: Applicable requirements in ASHRAE/IESNA 90.1, Section 6.4.4 - "HVAC System Construction and Insulation."

D. Exhaust system shall comply with CMC requirements**.**

E. ASHRAE/IESNA 90.1 requires leakage testing for representative sections totaling no less than 25 percent of installed duct area for ducts designated to operate at a static-pressure class in excess of 3-inch wg . Consider building a mockup of typical portions of the system that can be tested early in the construction process. This standard, as enforced by some authorities having jurisdiction, requires duct systems with static-pressure classes in excess of 3-inch wg to be identified on Drawings.

PART 2 - PRODUCTS

2.1 SINGLE-WALL RECTANGULAR DUCTS AND FITTINGS

A. General Fabrication Requirements: Comply with SMACNA's "HVAC Duct Construction Standards - Metal and Flexible" based on indicated static-pressure class unless otherwise indicated.

B. Transverse Joints: Select joint types and fabricate according to SMACNA's "HVAC Duct Construction Standards - Metal and Flexible," Figure 2-1, "Rectangular Duct/Transverse Joints,"

for static-pressure class, applicable sealing requirements, materials involved, duct-support intervals, and other provisions in SMACNA's "HVAC Duct Construction Standards - Metal and Flexible."

C. Longitudinal Seams: Select seam types and fabricate according to SMACNA's "HVAC Duct Construction Standards - Metal and Flexible," Figure 2-2, "Rectangular Duct/Longitudinal Seams," for static-pressure class, applicable sealing requirements, materials involved, duct-support intervals, and other provisions in SMACNA's "HVAC Duct Construction Standards - Metal and Flexible."

D. Elbows, Transitions, Offsets, Branch Connections, and Other Duct Construction: Select types and fabricate according to SMACNA's "HVAC Duct Construction Standards - Metal and Flexible," Chapter 4, "Fittings and Other Construction," for static-pressure class, applicable sealing requirements, materials involved, duct-support intervals, and other provisions in SMACNA's "HVAC Duct Construction Standards - Metal and Flexible."

2.2 SINGLE-WALL ROUND AND FLAT-OVAL DUCTS AND FITTINGS

A. General Fabrication Requirements: Comply with SMACNA's "HVAC Duct Construction Standards - Metal and Flexible," Chapter 3, "Round, Oval, and Flexible Duct," based on indicated static-pressure class unless otherwise indicated.
   1. Factory- or shop-fabricated spiral lock seam duct:
      a. No snap lock
      b. Factory-fabricated longitudinal seam acceptable for ducts larger than standard factory sizes
   2. Manufacturers:
      a. United Sheet Metal Division, United McGill
      b. Semco Manufacturing, Inc.
      c. Or equal

B. Flat-Oval Ducts: Indicated dimensions are the duct width (major dimension) and diameter of the round sides connecting the flat portions of the duct (minor dimension).

C. Transverse Joints: Select joint types and fabricate according to SMACNA's "HVAC Duct Construction Standards - Metal and Flexible," Figure 3-1, "Round Duct Transverse Joints," for static-pressure class, applicable sealing requirements, materials involved, duct-support intervals, and other provisions in SMACNA's "HVAC Duct Construction Standards - Metal and Flexible."
   1. Transverse Joints in Ducts Larger Than 60 Inches in Diameter: Flanged.

D. Longitudinal Seams: Select seam types and fabricate according to SMACNA's "HVAC Duct Construction Standards - Metal and Flexible," Figure 3-2, "Round Duct Longitudinal Seams," for static-pressure class, applicable sealing requirements, materials involved, duct-support intervals, and other provisions in SMACNA's "HVAC Duct Construction Standards - Metal and Flexible."
   1. Fabricate round ducts larger than 90 inches in diameter with butt-welded longitudinal seams.
   2. Fabricate flat-oval ducts larger than 72 inches in width (major dimension) with butt-welded longitudinal seams.

E. Fittings:
   1. Same material and construction as duct in which installed

2. For ductwork exposed to occupant view, do not use fabricated fittings at taps to terminal units and outlets. Instead use saddle tap cut into continuous spiral duct. Intent is for spiral duct to be continuous for aesthetic reasons. Saddle tap flange width shall be 0.5 inches or less.

F. Tees and Laterals: Select types and fabricate according to SMACNA's "HVAC Duct Construction Standards - Metal and Flexible," Figure 3-5, "90 Degree Tees and Laterals," and Figure 3-6, "Conical Tees," for static-pressure class, applicable sealing requirements, materials involved, duct-support intervals, and other provisions in SMACNA's "HVAC Duct Construction Standards - Metal and Flexible."

2.3 SHEET METAL MATERIALS

A. General Material Requirements: Comply with SMACNA's "HVAC Duct Construction Standards - Metal and Flexible" for acceptable materials, material thicknesses, and duct construction methods unless otherwise indicated. Sheet metal materials shall be free of pitting, seam marks, roller marks, stains, discolorations, and other imperfections.

B. Galvanized Sheet Steel: Comply with ASTM A 653/A 653M.
1. General Applications (except as noted below): G60 Galvanized Coating.
2. Plenum Walls and Blank-Offs Where in Contact with Cooling Coil: G90 Galvanized Coating.
3. Exterior Applications: G90 Galvanized Coating.
4. Finishes for Surfaces Exposed to View: Mill phosphatized.

C. PVC-Coated, Galvanized Sheet Steel: Comply with ASTM A 653/A 653M.
1. Galvanized Coating Designation: G90
2. Minimum Thickness for Factory-Applied PVC Coating: 4 mils thick on sheet metal surface of ducts and fittings, and minimum 1 mil thick on opposite surface.
3. Coating Materials: Acceptable to authorities having jurisdiction for use on ducts listed and labeled by an NRTL for compliance with UL 181, Class 1.

D. Carbon-Steel Sheets: Comply with ASTM A 1008/A 1008M, with oiled, matte finish for exposed ducts.

E. Stainless-Steel Sheets: Comply with ASTM A 480/A 480M, Type 304L or 316L, as indicated in the "Duct Schedule" Article; cold rolled, annealed, sheet. Exposed surface finish shall be No. 2B, No. 2D, No. 3, or No. 4 as indicated in the "Duct Schedule" Article.

F. Aluminum Sheets: Comply with ASTM B 209 Alloy 3003, H14 temper; with mill finish for concealed ducts, and standard, one-side bright finish for duct surfaces exposed to view.

G. Factory- or Shop-Applied Antimicrobial Coating:
1. Apply to the surface of sheet metal that will form the interior surface of the duct. An untreated clear coating shall be applied to the exterior surface.
2. Antimicrobial compound shall be tested for efficacy by an NRTL and registered by the EPA for use in HVAC systems.
3. Coating containing the antimicrobial compound shall have a hardness of 2H, minimum, when tested according to ASTM D 3363.

4. Surface-Burning Characteristics: Maximum flame-spread index of 25 and maximum smoke-developed index of 50 when tested according to UL 723; certified by an NRTL.
5. Shop-Applied Coating Color: White.
6. Antimicrobial coating on sheet metal is not required for duct containing liner treated with antimicrobial coating.

H. Reinforcement Shapes and Plates: ASTM A 36/A 36M, steel plates, shapes, and bars; black and galvanized.
1. Where black- and galvanized-steel shapes and plates are used to reinforce aluminum ducts, isolate the different metals with butyl rubber, neoprene, or EPDM gasket materials.

I. Tie Rods: Galvanized steel, 1/4-inch minimum diameter for lengths 36 inches or less; 3/8-inch minimum diameter for lengths longer than 36 inches.

2.4 DUCT LINER

A. Fibrous-Glass Duct Liner: Comply with ASTM C 1071, NFPA 90A, or NFPA 90B; and with NAIMA AH124, "Fibrous Glass Duct Liner Standard."
1. Manufacturers: Subject to compliance with requirements, available manufacturers offering products that may be incorporated into the Work include, but are not limited to the following:
a. CertainTeed Corporation; Insulation Group
b. Johns Manville
c. Knauf Insulation
d. Maximum Thermal Conductivity:
1) Type I, Flexible: 0.27 Btu x in./h x sq. ft. x deg F at 75 deg F mean temperature.
2) Type II, Rigid: 0.23 Btu x in./h x sq. ft. x deg F at 75 deg F mean temperature.
2. Antimicrobial Erosion-Resistant Coating: Apply to the surface of the liner that will form the interior surface of the duct to act as a moisture repellent and erosion-resistant coating. Antimicrobial compound shall be tested for efficacy by an NRTL and registered by the EPA for use in HVAC systems.
3. Water-Based Liner Adhesive: Comply with NFPA 90A or NFPA 90B and with ASTM C 916.
a. For indoor applications, adhesive shall have a VOC content of 80 g/L or less when calculated according to 40 CFR 59, Subpart D (EPA Method 24).
b. Adhesive shall comply with the testing and product requirements of the California Department of Health Services' "Standard Practice for the Testing of Volatile Organic Emissions from Various Sources Using Small-Scale Environmental Chambers."

B. Flexible Elastomeric Duct Liner: Preformed, cellular, closed-cell, sheet materials complying with ASTM C 534, Type II, Grade 1; and with NFPA 90A or NFPA 90B.
1. Manufacturers: Subject to compliance with requirements, available manufacturers offering products that may be incorporated into the Work include, but are not limited to the following:
a. Armacell LLC.
b. Aeroflex USA Inc.
c. Rubatex International, LLC.

2. Surface-Burning Characteristics: Maximum flame-spread index of 25 and maximum smoke-developed index of 50 when tested according to UL 723; certified by an NRTL.
3. Liner Adhesive: As recommended by insulation manufacturer and complying with NFPA 90A or NFPA 90B.
   a. For indoor applications, adhesive shall have a VOC content of 50 g/L or less when calculated according to 40 CFR 59, Subpart D (EPA Method 24).
   b. Adhesive shall comply with the testing and product requirements of the California Department of Health Services' "Standard Practice for the Testing of Volatile Organic Emissions from Various Sources Using Small-Scale Environmental Chambers."

C. Insulation Pins and Washers:
1. Cupped-Head, Capacitor-Discharge-Weld Pins: Copper- or zinc-coated steel pin, fully annealed for capacitor-discharge welding, 0.135-inch-diameter shank, length to suit depth of insulation indicated with integral 1-1/2-inch galvanized carbon-steel washer.
2. Insulation-Retaining Washers: Self-locking washers formed from 0.016-inch-thick stainless steel; with beveled edge sized as required to hold insulation securely in place but not less than 1-1/2 inches in diameter.

D. Shop Application of Duct Liner: Comply with SMACNA's "HVAC Duct Construction Standards - Metal and Flexible," Figure 7-11, "Flexible Duct Liner Installation."
1. Adhere a single layer of indicated thickness of duct liner with at least 90 percent adhesive coverage at liner contact surface area. Attaining indicated thickness with multiple layers of duct liner is prohibited.
2. Apply adhesive to transverse edges of liner facing upstream that do not receive metal nosing.
3. Butt transverse joints without gaps, and coat joint with adhesive.
4. Fold and compress liner in corners of rectangular ducts or cut and fit to ensure butted-edge overlapping.
5. Do not apply liner in rectangular ducts with longitudinal joints, except at corners of ducts, unless duct size and dimensions of standard liner make longitudinal joints necessary.
6. Apply adhesive coating on longitudinal seams in ducts with air velocity of 2500 fpm.
7. Secure liner with mechanical fasteners 4 inches from corners and at intervals not exceeding 12 inches transversely; at 3 inches from transverse joints and at intervals not exceeding 18 inches longitudinally.
8. Secure transversely oriented liner edges facing the airstream with metal nosings that have either channel or "Z" profiles or are integrally formed from duct wall. Fabricate edge facings at the following locations:
   a. Fan discharges.
   b. Intervals of lined duct preceding unlined duct.
   c. Upstream edges of transverse joints in ducts where air velocities are higher than 2500 fpm or where indicated.
9. Secure insulation between perforated sheet metal inner duct of same thickness as specified for outer shell. Use mechanical fasteners that maintain inner duct at uniform distance from outer shell without compressing insulation.
   a. Sheet Metal Inner Duct Perforations: 3/32-inch diameter, with an overall open area of 23 percent.
10. Terminate inner ducts with buildouts attached to fire-damper sleeves, dampers, turning vane assemblies, or other devices. Fabricated buildouts (metal hat sections) or other

buildout means are optional; when used, secure buildouts to duct walls with bolts, screws, rivets, or welds.

2.5 SEALANT AND GASKETS

A. General Sealant and Gasket Requirements: Surface-burning characteristics for sealants and gaskets shall be a maximum flame-spread index of 25 and a maximum smoke-developed index of 50 when tested according to UL 723; certified by an NRTL.

B. Two-Part Tape Sealing System:
1. Tape: Woven cotton fiber impregnated with mineral gypsum and modified acrylic/silicone activator to react exothermically with tape to form hard, durable, airtight seal.
2. Tape Width: 3 inches.
3. Sealant: Modified styrene acrylic.
4. Water resistant.
5. Mold and mildew resistant.
6. Maximum Static-Pressure Class: 10-inch wg, positive and negative.
7. Service: Indoor and outdoor.
8. Service Temperature: Minus 40 to plus 200 deg F.
9. Substrate: Compatible with galvanized sheet steel (both PVC coated and bare), stainless steel, or aluminum.
10. For indoor applications, sealant shall have a VOC content of 250 g/L or less when calculated according to 40 CFR 59, Subpart D (EPA Method 24).
11. Sealant shall comply with the testing and product requirements of the California Department of Health Services' "Standard Practice for the Testing of Volatile Organic Emissions from Various Sources Using Small-Scale Environmental Chambers."

C. Water-Based Joint and Seam Sealant:
1. Application Method: Brush on.
2. Solids Content: Minimum 65 percent.
3. Shore A Hardness: Minimum 20.
4. Water resistant.
5. Mold and mildew resistant.
6. VOC: Maximum 75 g/L (less water).
7. Maximum Static-Pressure Class: 10-inch wg, positive and negative.
8. Service: Indoor or outdoor.
9. Substrate: Compatible with galvanized sheet steel (both PVC coated and bare), stainless steel, or aluminum sheets.

D. Solvent-Based Joint and Seam Sealant:
1. Application Method: Brush on.
2. Base: Synthetic rubber resin.
3. Solvent: Toluene and heptane.
4. Solids Content: Minimum 60 percent.
5. Shore A Hardness: Minimum 60.
6. Water resistant.
7. Mold and mildew resistant.
8. For indoor applications, sealant shall have a VOC content of 250 g/L or less when calculated according to 40 CFR 59, Subpart D (EPA Method 24).

9. VOC: Maximum 395 g/L.
10. Sealant shall comply with the testing and product requirements of the California Department of Health Services' "Standard Practice for the Testing of Volatile Organic Emissions from Various Sources Using Small-Scale Environmental Chambers."
11. Maximum Static-Pressure Class: 10-inch wg, positive or negative.
12. Service: Indoor or outdoor.
13. Substrate: Compatible with galvanized sheet steel (both PVC coated and bare), stainless steel, or aluminum sheets.

E. Flanged Joint Sealant: Comply with ASTM C 920.
1. General: Single-component, acid-curing, silicone, elastomeric.
2. Type: S.
3. Grade: NS.
4. Class: 25.
5. Use: O.
6. For indoor applications, sealant shall have a VOC content of 250 g/L or less when calculated according to 40 CFR 59, Subpart D (EPA Method 24).
7. Sealant shall comply with the testing and product requirements of the California Department of Health Services' "Standard Practice for the Testing of Volatile Organic Emissions from Various Sources Using Small-Scale Environmental Chambers."

F. Flange Gaskets: Butyl rubber, neoprene, or EPDM polymer with polyisobutylene plasticizer.

G. Round Duct Joint O-Ring Seals:
1. Seal shall provide maximum leakage class of 3 cfm/100 sq. ft. at 1-inch wg and shall be rated for 10-inch wg static-pressure class, positive or negative.
2. EPDM O-ring to seal in concave bead in coupling or fitting spigot.
3. Double-lipped, EPDM O-ring seal, mechanically fastened to factory-fabricated couplings and fitting spigots.

2.6 HANGERS AND SUPPORTS

A. Hanger Rods for Noncorrosive Environments: Cadmium-plated steel rods and nuts.

B. Hanger Rods for Corrosive Environments: Electrogalvanized, all-thread rods or galvanized rods with threads painted with zinc-chromate primer after installation.

C. Strap and Rod Sizes: Comply with SMACNA's "HVAC Duct Construction Standards - Metal and Flexible," Table 5-1, "Rectangular Duct Hangers Minimum Size," and Table 5-2, "Minimum Hanger Sizes for Round Duct."

D. Steel Cables for Galvanized-Steel Ducts: Galvanized steel complying with ASTM A 603.

E. Steel Cables for Stainless-Steel Ducts: Stainless steel complying with ASTM A 492.

F. Steel Cable End Connections: Cadmium-plated steel assemblies with brackets, swivel, and bolts designed for duct hanger service; with an automatic-locking and clamping device.

G. Duct Attachments: Sheet metal screws, blind rivets, or self-tapping metal screws; compatible with duct materials.

H. Trapeze and Riser Supports:
   1. Supports for Galvanized-Steel Ducts: Galvanized-steel shapes and plates.
   2. Supports for Stainless-Steel Ducts: Stainless-steel shapes and plates.
   3. Supports for Aluminum Ducts: Aluminum or galvanized steel coated with zinc chromate.

2.7 SEISMIC-RESTRAINT DEVICES

A. Manufacturers: Subject to compliance with requirements, available manufacturers offering products that may be incorporated into the Work include, but are not limited to the following:
   1. Hilti Corp.
   2. TOLCO; a brand of NIBCO Inc.
   3. Unistrut Corporation; Tyco International, Ltd.

B. General Requirements for Restraint Components: Rated strengths, features, and applications shall be as defined in reports by the Office of Statewide Health Planning and Development for the State of California.

C. Channel Support System: Shop- or field-fabricated support assembly made of slotted steel channels rated in tension, compression, and torsion forces and with accessories for attachment to braced component at one end and to building structure at the other end. Include matching components and corrosion-resistant coating.

D. Restraint Cables: ASTM A 603, galvanized-steel cables with end connections made of cadmium-plated steel assemblies with brackets, swivel, and bolts designed for restraining cable service; and with an automatic-locking and clamping device or double-cable clips.

E. Hanger Rod Stiffener: Reinforcing steel angle or channel unistrut clamped to hanger rod.

F. Mechanical Anchor Bolts: Drilled-in and stud-wedge or female-wedge type. Select anchor bolts with strength required for anchor and as tested according to ASTM E 488.

PART 3 - EXECUTION

3.1 DUCT INSTALLATION

A. Drawing plans, schematics, and diagrams indicate general location and arrangement of duct system. Indicated duct locations, configurations, and arrangements were used to size ducts and calculate friction loss for air-handling equipment sizing and for other design considerations. Install duct systems as indicated unless deviations to layout are approved on Shop Drawings and Coordination Drawings.

B. Install ducts according to SMACNA's "HVAC Duct Construction Standards - Metal and Flexible" unless otherwise indicated.

C. Install round and flat-oval ducts in maximum practical lengths.

D. Install ducts with fewest possible joints.

E. Install factory- or shop-fabricated fittings for changes in direction, size, and shape and for branch connections.

F. Unless otherwise indicated, install ducts vertically and horizontally, and parallel and perpendicular to building lines.

G. Install ducts close to walls, overhead construction, columns, and other structural and permanent enclosure elements of building.

H. Install ducts with a clearance of 1 inch, plus allowance for insulation thickness.

I. Route ducts to avoid passing through transformer vaults and electrical equipment rooms and enclosures.

J. Where ducts pass through non-fire-rated interior partitions and exterior walls and are exposed to view, cover the opening between the partition and duct or duct insulation with sheet metal flanges of same metal thickness as the duct. Overlap openings on four sides by at least 1-1/2 inches.

K. Where ducts pass through fire-rated interior partitions and exterior walls, install fire dampers as required by NFPA 90A. Comply with requirements in Section 233300 "Air Duct Accessories" for fire and smoke dampers.

L. Protect duct interiors from moisture, construction debris and dust, and other foreign materials. Comply with SMACNA's "IAQ Guidelines for Occupied Buildings Under Construction," Appendix G, "Duct Cleanliness for New Construction Guidelines."

3.2 INSTALLATION OF EXPOSED DUCTWORK

A. Protect ducts exposed in finished spaces from being dented, scratched, or damaged.

B. Trim duct sealants flush with metal. Create a smooth and uniform exposed bead. Do not use two-part tape sealing system.

C. Grind weldsto provide smooth surface free of burrs, sharp edges, and weld splatter. When welding stainless steel with a No. 3 or 4 finish, grind the welds flush, polish the exposed welds, and treat the welds to remove discoloration caused by welding.

D. Maintain consistency, symmetry, and uniformity in the arrangement and fabrication of fittings, hangers and supports, duct accessories, and air outlets.

E. Repair or replace damaged sections and finished work that does not comply with these requirements.

3.3 ADDITIONAL INSTALLATION REQUIREMENTS FOR COMMERCIAL KITCHEN HOOD EXHAUST DUCT

A. Install commercial kitchen hood exhaust ducts without dips and traps that may hold grease, and sloped a minimum of 2 percent to drain grease back to the hood.

B. Install fire-rated access panel assemblies at each change in direction and at maximum intervals of 12 feet in horizontal ducts, and at every floor for vertical ducts, or as indicated on Drawings.

C. Do not penetrate fire-rated assemblies except as allowed by applicable building codes and authorities having jurisdiction.

3.4 DUCT SEALING

A. Seal ducts for duct static-pressure, seal classes, and leakage classes specified in "Duct Schedule" Article according to SMACNA's "HVAC Duct Construction Standards - Metal and Flexible."

B. Seal ducts to the following seal classes according to SMACNA's "HVAC Duct Construction Standards - Metal and Flexible":
   1. Comply with SMACNA's "HVAC Duct Construction Standards - Metal and Flexible."
   2. Outdoor, Supply-Air Ducts: Seal Class A.
   3. Outdoor, Exhaust Ducts: Seal Class B.
   4. Outdoor, Return-Air Ducts: Seal Class A.
   5. Unconditioned Space, Supply-Air Ducts in Pressure Classes 1-Inch wg and Lower: Seal Class B.
   6. Unconditioned Space, Supply-Air Ducts in Pressure Classes Higher Than 1-Inch wg: Seal Class A.
   7. Unconditioned Space, Exhaust Ducts: Seal Class B.
   8. Unconditioned Space, Return-Air Ducts: Seal Class A.
   9. Conditioned Space, Supply-Air Ducts in Pressure Classes 1-Inch wg and Lower: Seal Class B.
   10. Conditioned Space, Supply-Air Ducts in Pressure Classes Higher Than 1-Inch wg: Seal Class A.
   11. Conditioned Space, Exhaust Ducts: Seal Class A.
   12. Conditioned Space, Return-Air Ducts: Seal Class A.

3.5 HANGER AND SUPPORT INSTALLATION

A. Comply with SMACNA's "HVAC Duct Construction Standards - Metal and Flexible," Chapter 5, "Hangers and Supports."

B. Building Attachments: Concrete inserts, powder-actuated fasteners, or structural-steel fasteners appropriate for construction materials to which hangers are being attached.
   1. Where practical, install concrete inserts before placing concrete.
   2. Install powder-actuated concrete fasteners after concrete is placed and completely cured.

3. Use powder-actuated concrete fasteners for standard-weight aggregate concretes or for slabs more than 4 inches thick.
4. Do not use powder-actuated concrete fasteners for lightweight-aggregate concretes or for slabs less than 4 inches thick.
5. Do not use powder-actuated concrete fasteners for seismic restraints.

C. Hanger Spacing: Comply with SMACNA's "HVAC Duct Construction Standards - Metal and Flexible," Table 5-1, "Rectangular Duct Hangers Minimum Size," and Table 5-2, "Minimum Hanger Sizes for Round Duct," for maximum hanger spacing; install hangers and supports within 24 inches of each elbow and within 48 inches of each branch intersection.

D. Hangers Exposed to View: Threaded rod and angle or channel supports.

E. Support vertical ducts with steel angles or channel secured to the sides of the duct with welds, bolts, sheet metal screws, or blind rivets; support at each floor and at a maximum interval of 16 feet.

F. Install upper attachments to structures. Select and size upper attachments with pull-out, tension, and shear capacities appropriate for supported loads and building materials where used.

3.6 SEISMIC-RESTRAINT-DEVICE INSTALLATION

A. Install ducts with hangers and braces designed to support the duct and to restrain against seismic forces required by applicable building codes. Comply with SMACNA's "Seismic Restraint Manual: Guidelines for Mechanical Systems".
1. Space lateral supports a maximum of 40 feet o.c., and longitudinal supports a maximum of 80 feet o.c.
2. Brace a change of direction longer than 12 feet.

B. Select seismic-restraint devices with capacities adequate to carry present and future static and seismic loads.

C. Install cables so they do not bend across edges of adjacent equipment or building structure.

D. Install cable restraints on ducts that are suspended with vibration isolators.

E. Install seismic-restraint devices using methods approved by an evaluation service member of the ICC Evaluation Service.

F. Attachment to Structure: If specific attachment is not indicated, anchor bracing and restraints to structure, to flanges of beams, to upper truss chords of bar joists, or to concrete members.

G. Drilling for and Setting Anchors:
1. Identify position of reinforcing steel and other embedded items prior to drilling holes for anchors. Do not damage existing reinforcement or embedded items during drilling. Notify the Architect if reinforcing steel or other embedded items are encountered during drilling. Locate and avoid prestressed tendons, electrical and telecommunications conduit, and gas lines.

2. Do not drill holes in concrete or masonry until concrete, mortar, or grout has achieved full design strength.
3. Wedge Anchors: Protect threads from damage during anchor installation. Heavy-duty sleeve anchors shall be installed with sleeve fully engaged in the structural element to which anchor is to be fastened.
4. Set anchors to manufacturer's recommended torque, using a torque wrench.
5. Install zinc-coated steel anchors for interior applications and stainless-steel anchors for applications exposed to weather.

3.7 CONNECTIONS

A. Make connections to equipment with flexible connectors complying with Section 233300 "Air Duct Accessories."

B. Comply with SMACNA's "HVAC Duct Construction Standards - Metal and Flexible" for branch, outlet and inlet, and terminal unit connections.

3.8 PAINTING

A. Paint interior of metal ducts that are visible through registers and grilles and that do not have duct liner. Apply one coat of flat, black, latex paint over a compatible galvanized-steel primer. Paint materials and application requirements are specified in Section 099113 "Exterior Painting" and Section 099123 "Interior Painting."

3.9 FIELD QUALITY CONTROL

A. Perform tests and inspections.

B. Leakage Tests:
1. Comply with SMACNA's "HVAC Air Duct Leakage Test Manual." Submit a test report for each test.
2. Test the following systems:
   a. Ducts with a Pressure Class Higher Than 3-Inch wg: Test representative duct sections, selected by Engineer from sections installed, totaling no less than 25 percent of total installed duct area for each designated pressure class.
3. Disassemble, reassemble, and seal segments of systems to accommodate leakage testing and for compliance with test requirements.
4. Test for leaks before applying external insulation.
5. Conduct tests at static pressures equal to maximum design pressure of system or section being tested. If static-pressure classes are not indicated, test system at maximum system design pressure. Do not pressurize systems above maximum design operating pressure.
6. Give seven days advance notice for testing.

C. Duct System Cleanliness Tests:
1. Visually inspect duct system to ensure that no visible contaminants are present.

D. Contractor shall develop and implement an IAQ Management Plan for the construction and preoccupancy phases of the building as follows:
   1. During construction meet or exceed the recommended control measures of the Sheet Metal and Air Conditioning National Contractors Association (SMACNA) IAQ Guidelines for Occupied Buildings Under Construction, and Edition 2007, ANSI/SMACNA 008-2008 (Chapter 3).
   2. Protect stored materials on-site and installed absorptive materials from moisture damage.
   3. If permanently installed air handlers are used during construction, then filtration media with a minimum efficiency reporting value (MERV) of 8 must be used at each return air grille, as determined by ASHRAE Standard 52.2-2012 (with errata, but without addenda). Replace air filtration media immediately prior to occupancy.

E. Duct system will be considered defective if it does not pass tests and inspections.

F. Prepare test and inspection reports.

3.10 DUCT CLEANING

A. Clean [**new**] duct system(s) before testing, adjusting, and balancing.

B. Use service openings for entry and inspection.
   1. Create new openings and install access panels appropriate for duct static-pressure class if required for cleaning access. Provide insulated panels for insulated or lined duct. Patch insulation and liner as recommended by duct liner manufacturer. Comply with Section 233300 "Air Duct Accessories" for access panels and doors.
   2. Disconnect and reconnect flexible ducts as needed for cleaning and inspection.
   3. Remove and reinstall ceiling to gain access during the cleaning process.

C. Particulate Collection and Odor Control:
   1. When venting vacuuming system inside the building, use HEPA filtration with 99.97 percent collection efficiency for 0.3-micron-size (or larger) particles.
   2. When venting vacuuming system to outdoors, use filter to collect debris removed from HVAC system, and locate exhaust downwind and away from air intakes and other points of entry into building.

D. Clean the following components by removing surface contaminants and deposits:
   1. Air outlets and inlets (registers, grilles, and diffusers).
   2. Supply, return, and exhaust fans including fan housings, plenums (except ceiling supply and return plenums), scrolls, blades or vanes, shafts, baffles, dampers, and drive assemblies.
   3. Air-handling unit internal surfaces and components including mixing box, coil section, air wash systems, spray eliminators, condensate drain pans, humidifiers and dehumidifiers, filters and filter sections, and condensate collectors and drains.
   4. Coils and related components.
   5. Return-air ducts, dampers, actuators, and turning vanes except in ceiling plenums and mechanical equipment rooms.
   6. Supply-air ducts, dampers, actuators, and turning vanes.
   7. Dedicated exhaust and ventilation components and makeup air systems.

E. Mechanical Cleaning Methodology:
   1. Clean metal duct systems using mechanical cleaning methods that extract contaminants from within duct systems and remove contaminants from building.
   2. Use vacuum-collection devices that are operated continuously during cleaning. Connect vacuum device to downstream end of duct sections so areas being cleaned are under negative pressure.
   3. Use mechanical agitation to dislodge debris adhered to interior duct surfaces without damaging integrity of metal ducts, duct liner, or duct accessories.
   4. Clean fibrous-glass duct liner with HEPA vacuuming equipment; do not permit duct liner to get wet. Replace fibrous-glass duct liner that is damaged, deteriorated, or delaminated or that has friable material, mold, or fungus growth.
   5. Clean coils and coil drain pans according to NADCA 1992. Keep drain pan operational. Rinse coils with clean water to remove latent residues and cleaning materials; comb and straighten fins.
   6. Provide drainage and cleanup for wash-down procedures.
   7. Antimicrobial Agents and Coatings: Apply EPA-registered antimicrobial agents if fungus is present. Apply antimicrobial agents according to manufacturer's written instructions after removal of surface deposits and debris.

3.11 START UP

A. Air Balance: Comply with requirements in Section 230593 "Testing, Adjusting, and Balancing for HVAC."

3.12 DUCT SCHEDULE

A. Supply Ducts:
   1. Ducts Connected to Fan Coil Units, Furnaces, Heat Pumps, and Terminal Units:
      a. Pressure Class: Positive 1-inch wg.
      b. Minimum SMACNA Seal Class: B.
      c. SMACNA Leakage Class for Rectangular: 8.
      d. SMACNA Leakage Class for Round and Flat Oval: 4.
   2. Ducts Connected to Constant-Volume Air-Handling Units:
      a. Pressure Class: Positive 3-inch wg.
      b. Minimum SMACNA Seal Class: A.
      c. SMACNA Leakage Class for Rectangular: 4.
      d. SMACNA Leakage Class for Round and Flat Oval: 2.
   3. Ducts Connected to Variable-Air-Volume Air-Handling Units:
      a. Pressure Class: Positive 3-inch wg.
      b. Minimum SMACNA Seal Class: A.
      c. SMACNA Leakage Class for Rectangular: 4.
      d. SMACNA Leakage Class for Round and Flat Oval: 2.
   4. Ducts Connected to Equipment Not Listed Above:
      a. Pressure Class: Positive 2-inch wg.
      b. Minimum SMACNA Seal Class: A.
      c. SMACNA Leakage Class for Rectangular: 4.
      d. SMACNA Leakage Class for Round and Flat Oval: 2.

B. Return Ducts:
   1. Ducts Connected to Fan Coil Units, Furnaces, Heat Pumps, and Terminal Units:
      a. Pressure Class: Positive or negative 1-inch wg.
      b. Minimum SMACNA Seal Class: B.
      c. SMACNA Leakage Class for Rectangular: 8.
      d. SMACNA Leakage Class for Round and Flat Oval: 4.
   2. Ducts Connected to Air-Handling Units:
      a. Pressure Class: Positive or negative 3-inch wg.
      b. Minimum SMACNA Seal Class: A.
      c. SMACNA Leakage Class for Rectangular: 4.
      d. SMACNA Leakage Class for Round and Flat Oval: 2.
   3. Ducts Connected to Equipment Not Listed Above:
      a. Pressure Class: Positive or negative 2-inch wg.
      b. Minimum SMACNA Seal Class: A.
      c. SMACNA Leakage Class for Rectangular: 4.
      d. SMACNA Leakage Class for Round and Flat Oval: 2.

C. Exhaust Ducts:
   1. Ducts Connected to Fans Exhausting (ASHRAE 62.1, Class 1 and 2) Air:
      a. Pressure Class: Negative 2-inch wg.
      b. Minimum SMACNA Seal Class: B if negative pressure, and A if positive pressure.
      c. SMACNA Leakage Class for Rectangular: 4.
      d. SMACNA Leakage Class for Round and Flat Oval: 2.
   2. Ducts Connected to Air-Handling Units:
      a. Pressure Class: Positive or negative 3-inch wg.
      b. Minimum SMACNA Seal Class: A.
      c. SMACNA Leakage Class for Rectangular: 4.
      d. SMACNA Leakage Class for Round and Flat Oval: 2.
   3. Ducts Connected to Commercial Kitchen Hoods: Comply with NFPA 96.
      a. Exposed to View: Type 304, stainless-steel sheet, No. 4 finish.
      b. Concealed: Type 304, stainless-steel sheet, No. 2D finish.
      c. Welded seams and joints.
      d. Pressure Class: Positive or negative 4-inch wg.
      e. Minimum SMACNA Seal Class: Welded seams, joints, and penetrations.
      f. SMACNA Leakage Class: 3.
   4. Ducts Connected to Dishwasher Hoods:
      a. Type 304L, stainless-steel sheet.
      b. Exposed to View: No. 3 finish.
      c. Concealed: No. 2D finish.
      d. Welded seams and flanged joints with watertight EPDM gaskets.
      e. Pressure Class: Positive or negative 3-inch wg.
      f. Minimum SMACNA Seal Class: Welded seams, joints, and penetrations.
      g. SMACNA Leakage Class: 3.
   5. Ducts Connected to Fans Exhausting Laboratory and Process (ASHRAE 62.1, Class 3 and 4) Air:
      a. Type 316L, stainless-steel sheet.
         1) Exposed to View: No. 4 finish.
         2) Concealed: No. 2D finish.
      b. PVC-coated, galvanized sheet steel with thicker coating on duct interior.
      c. Pressure Class: Positive or negative 4-inch wg.

d. Minimum SMACNA Seal Class: Welded seams, joints, and penetrations.
e. SMACNA Leakage Class: 3.

6. Ducts Connected to Equipment Not Listed Above:
   a. Pressure Class: Positive or negative 3-inch wg.
   b. Minimum SMACNA Seal Class: A if positive pressure.
   c. SMACNA Leakage Class for Rectangular: 4.
   d. SMACNA Leakage Class for Round and Flat Oval: 2.

D. Outdoor-Air (Not Filtered, Heated, or Cooled) Ducts:
1. Ducts Connected to Fan Coil Units, Furnaces, Heat Pumps, and Terminal Units:
   a. Pressure Class: Positive or negative 2-inch wg.
   b. Minimum SMACNA Seal Class: A.
   c. SMACNA Leakage Class for Rectangular: 4.
   d. SMACNA Leakage Class for Round and Flat Oval: 2.
2. Ducts Connected to Air-Handling Units:
   a. Pressure Class: Positive or negative 2-inch wg.
   b. Minimum SMACNA Seal Class: A.
   c. SMACNA Leakage Class for Rectangular: 4.
   d. SMACNA Leakage Class for Round and Flat Oval: 2.
3. Ducts Connected to Equipment Not Listed Above:
   a. Pressure Class: Positive or negative 2-inch wg.
   b. Minimum SMACNA Seal Class: A.
   c. SMACNA Leakage Class for Rectangular: 4.
   d. SMACNA Leakage Class for Round and Flat Oval: 2.

E. Intermediate Reinforcement:
1. Galvanized-Steel Ducts: Galvanized steel.
2. PVC-Coated Ducts:
   a. Exposed to Airstream: Match duct material.
   b. Not Exposed to Airstream: Match duct material.
3. Stainless-Steel Ducts:
   a. Exposed to Airstream: Match duct material.
   b. Not Exposed to Airstream: Match duct material.
4. Aluminum Ducts: Aluminum.

F. Liner:
1. Supply Air Ducts: 2 inches thick.
2. Return Air Ducts: 2 inches thick.
3. Supply Fan Plenums: 2 inches thick.
4. Return Fan Plenums: 2 inches thick.
5. Transfer Ducts: 2 inches thick.

G. Double-Wall Duct Interstitial Insulation:
1. Supply Air Ducts: 2 inches thick.
2. Return Air Ducts: 2 inches thick.
3. Exhaust Air Ducts: 2 inches thick.

H. Elbow Configuration:
1. Rectangular Duct: Comply with SMACNA's "HVAC Duct Construction Standards - Metal and Flexible," Figure 4-2, "Rectangular Elbows."

a. Velocity 1000 fpm or Lower:
   1) Radius Type RE 1 with minimum 1.0 radius-to-diameter ratio.
   2) Mitered Type RE 4 with single-thickness turning vanes.
b. Velocity 1000 to 1500 fpm:
   1) Radius Type RE 1 with minimum 1.0 radius-to-diameter ratio.
   2) Radius Type RE 3 with minimum 1.0 radius-to-diameter ratio and single-thickness turning vanes.
   3) Mitered Type RE 2 with single-thickness vanes complying with SMACNA's "HVAC Duct Construction Standards - Metal and Flexible," Figure 4-3, "Vanes and Vane Runners," and Figure 4-4, "Vane Support in Elbows."
c. Velocity 1500 fpm or Higher:
   1) Radius Type RE 1 with minimum 1.5 radius-to-diameter ratio.
   2) Radius Type RE 3 with minimum 1.5 radius-to-diameter ratio and single-thickness turning vanes.
   3) Mitered Type RE 2 with single-thickness vanes complying with SMACNA's "HVAC Duct Construction Standards - Metal and Flexible," Figure 4-3, "Vanes and Vane Runners," and Figure 4-4, "Vane Support in Elbows."

2. Rectangular Duct: Comply with SMACNA's "HVAC Duct Construction Standards - Metal and Flexible," Figure 4-2, "Rectangular Elbows."
   a. Radius Type RE 1 with minimum 1.5 radius-to-diameter ratio.
   b. Radius Type RE 3 with minimum 1.0 radius-to-diameter ratio and single-thickness turning vanes.
   c. Mitered Type RE 2 with single-thickness vanes complying with SMACNA's "HVAC Duct Construction Standards - Metal and Flexible," Figure 4-3, "Vanes and Vane Runners," and Figure 4-4, "Vane Support in Elbows."
3. Round Duct: Comply with SMACNA's "HVAC Duct Construction Standards - Metal and Flexible," Figure 3-4, "Round Duct Elbows."
   a. Minimum Radius-to-Diameter Ratio and Elbow Segments: Comply with SMACNA's "HVAC Duct Construction Standards - Metal and Flexible," Table 3-1, "Mitered Elbows." Elbows with less than 90-degree change of direction have proportionately fewer segments.
      1) Velocity 1000 fpm or Lower: 1.0 radius-to-diameter ratio and three segments for 90-degree elbow.
      2) Velocity 1000 to 1500 fpm: 1.5 radius-to-diameter ratio and four segments for 90-degree elbow.
      3) Velocity 1500 fpm or Higher: 1.5 radius-to-diameter ratio and five segments for 90-degree elbow.
      4) Radius-to Diameter Ratio: 1.5.
   b. Round Elbows, 10 Inches and Smaller in Diameter: Stamped or pleated.
   c. Round Elbows, 12 Inches and Larger in Diameter: Welded.

I. Branch Configuration:
   1. Rectangular Duct: Comply with SMACNA's "HVAC Duct Construction Standards - Metal and Flexible," Figure 4-6, "Branch Connection."
      a. Rectangular Main to Rectangular Branch: 45-degree entry.
      b. Rectangular Main to Round Branch: Spin in.
   2. Taps shall be the more stringent of what is shown on the mechanical drawings and the criteria listed below. Round and Flat Oval: Comply with SMACNA's "HVAC Duct Construction Standards - Metal and Flexible," Figure 3-5, "90 Degree Tees and Laterals," and Figure 3-6, "Conical Tees." Saddle taps are permitted in existing duct.

a. Velocity 900 fpm or Lower: 90-degree tap.
b. Velocity 901 to 1500 fpm: Conical tap.
c. Velocity 1501 fpm or Higher: 45-degree lateral.

END OF SECTION 233113

SECTION 233300 - AIR DUCT ACCESSORIES

PART 1 - GENERAL

1.1 RELATED DOCUMENTS

A. Drawings and general provisions of the Contract, including General and Supplementary Conditions and Division 01 Specification Sections, apply to this Section.

1.2 SUMMARY

A. Section Includes:
1. Backdraft and pressure relief dampers.
2. Barometric relief dampers.
3. Manual volume dampers.
4. Combination fire and smoke dampers.
5. Duct silencers.
6. Turning vanes.
7. Cable-operated remote damper operators.
8. Duct-mounted access doors.
9. Flexible connectors.
10. Duct accessory hardware.

B. Related Requirements:
1. Section 233346 "Flexible Ducts" for insulated and non-insulated flexible ducts.
2. Section 233723 "HVAC Gravity Ventilators" for roof-mounted ventilator caps.
3. Section 284621.11 "Addressable Fire-Alarm Systems" for duct-mounted fire and smoke detectors.

1.3 ACTION SUBMITTALS

A. Submittals shall be formatted per Section 230000 “General Mechanical Requirements”. The manufacturer shall resubmit the specification section showing compliance with each respective paragraphs and specified items and features in that particular specification section. All **exceptions** shall be clearly identified by referencing respective paragraph and other requirements. Next to each specification item, indicate the following:
1. “No Exception Taken”.
2. “Exception”. All exceptions shall be clearly identified by referencing respective paragraph and other requirements along with proposed alternative.

B. Product Data: For each type of product.
1. For duct silencers, include pressure drop and dynamic insertion loss data. Include breakout noise calculations for high transmission loss casings.

C. Sustainable Design Submittals:
1. Product data showing compliance with ASHRAE 62.1.

D. Shop Drawings: For duct accessories. Include plans, elevations, sections, details and attachments to other work.
   1. Detail duct accessories fabrication and installation in ducts and other construction. Include dimensions, weights, loads, and required clearances; and method of field assembly into duct systems and other construction. Include the following:
      a. Special fittings.
      b. Manual volume damper installations.
      c. Combination fire- and smoke-damper, including sleeves; and duct-mounted access doors and remote damper operators.
   2. Contractor shall provide a detailed plan for review and approval by the Design Professional. The plan shall include:
      a. The location and routing of remote damper operator controls.
      b. The termination points of operator hubs.
      c. The type, size, and placement of access panels, if required.

1.4 INFORMATIONAL SUBMITTALS

A. Coordination Drawings: Reflected ceiling plans, drawn to scale, on which ceiling-mounted access panels and access doors required for access to duct accessories are shown and coordinated with each other, using input from Installers of the items involved.

B. Source quality-control reports.

1.5 CLOSEOUT SUBMITTALS

A. Operation and Maintenance Data: For air duct accessories to include in operation and maintenance manuals.

B. Provide as-built drawings and documentation detailing the location and routing of all remote operator hubs and associated components.

1.6 MAINTENANCE MATERIAL SUBMITTALS

A. Furnish extra materials that match products installed and that are packaged with protective covering for storage and identified with labels describing contents.
   1. Fusible Links: Furnish quantity equal to 10 percent of amount installed.

PART 2 - PRODUCTS

2.1 ASSEMBLY DESCRIPTION

A. Comply with NFPA 90A, "Installation of Air Conditioning and Ventilating Systems," and with NFPA 90B, "Installation of Warm Air Heating and Air Conditioning Systems."

B. Comply with SMACNA's "HVAC Duct Construction Standards - Metal and Flexible" for acceptable materials, material thicknesses, and duct construction methods unless otherwise indicated. Sheet metal materials shall be free of pitting, seam marks, roller marks, stains, discolorations, and other imperfections.

2.2 MATERIALS

A. Galvanized Sheet Steel: Comply with ASTM A 653/A 653M.
   1. Galvanized Coating Designation: G60.
   2. Exposed-Surface Finish: Mill phosphatized.

B. Stainless-Steel Sheets: Comply with ASTM A 480/A 480M, Type 304, and having a No. 2D finish for concealed ducts and No. 4 finish for exposed ducts.

C. Aluminum Sheets: Comply with ASTM B 209, Alloy 3003, Temper H14; with mill finish for concealed ducts and standard, 1-side bright finish for exposed ducts.

D. Extruded Aluminum: Comply with ASTM B 221, Alloy 6063, Temper T6.

E. Reinforcement Shapes and Plates: Galvanized-steel reinforcement where installed on galvanized sheet metal ducts; compatible materials for aluminum and stainless-steel ducts.

F. Tie Rods: Galvanized steel, 1/4-inch minimum diameter for lengths 36 inches or less; 3/8-inch minimum diameter for lengths longer than 36 inches.

2.3 BACKDRAFT AND PRESSURE RELIEF DAMPERS

A. Manufactures shall be Ruskin, Greenheck or equal.

B. Frame: 8 inches x minimum 0.125 inch 6063-T5 extruded aluminum channel with front flange and galvanized steel braces at mitered corners.

C. Blades:
   1. Style: 2V.
   2. Action: Parallel.
   3. Orientation: Horizontal.
   4. Material: Minimum 0.070 inch 6063-T5 extruded aluminum.
   5. Width: Maximum 6 inches.

D. Bearings: Galvanized Steel Ball Axle Bearings.

E. Blade Seals: Extruded vinyl, mechanically attached to blade edge.

F. Linkage: External heavy duty type with steel clevis arms and plated steel tie bars & pivot pins with nylon pivot bearings.

G. Axles: [Nonferrous metal] [Galvanized steel] [Plated steel] [Stainless steel] [Nonmetallic] [Aluminum].

H. Counterbalances: Adjustable externally mounted counterbalance weights mechanically attached to blade enabling damper to operate over wide range of pressures.

I. Finish: Mill aluminum.

J. Performance Data:
1. Temperature Rating: Withstand -20° to 180°F.
2. Capacity: Demonstrate capacity of damper to withstand HVAC system operating conditions.
   a. Closed Position: Maximum differential pressure of 5 inches w.g..
   b. Open Position: Maximum air velocity of 3,900 feet per minute.
3. Pressure Drop: Maximum 0.3 inch w.g. at 10,000 CFM through 36 inch x 36 inch damper.

2.4 BAROMETRIC RELIEF DAMPERS

A. Manufactures shall be Ruskin, Greenheck or equal.

B. Construction:
1. Frame: Damper frame shall be 16 ga. Galvanized steel. Aluminum or 304 stainless steel is an option.
2. Blades: Damper blades shall be a minimum 0.063 inch thick aluminum.
3. Blade Stops: Each blade stop (at top and bottom of damper frame) shall occupy no more than 3 1/2” of the damper opening area to allow for maximum free area and to minimize pressure loss across the damper.
4. Seals:
5. Blade Edge: Vinyl is standard. None is an option.
6. Jamb: None is standard. EPDM is an option.
7. Linkage: External, steel tie bars
8. Axles: Plated steel stub axles are standard. Stainless steel is optional.
9. Bearings: Galvanized steel press fit. Acetal with stainless steel ball is optional
10. Finish: Mill finish. Paint coatings are optional.
11. Counterbalance: Blade mounted with adjustable weights.

2.5 MANUAL VOLUME DAMPERS

A. Fabricate in accordance with SMACNA Low Pressure Duct Construction Standards, and as indicated.

B. Fabricate splitter dampers of material same gage as duct to 24 inches size in either direction, and two gages heavier for sizes over 24 inches.

C. Fabricate splitter dampers of single thickness sheet metal to streamline shape. Secure blade with continuous hinge or rod. Operate with minimum 1/4 inch diameter rod in self aligning, universal joint action flanged bushing with set screw.

D. Fabricate single blade dampers for duct sizes to 12 x 48 inch.

E. Fabricate multi-blade damper of opposed blade pattern with maximum blade sizes 12 x 72 inch. Assemble center and edge crimped blades in prime coated or galvanized channel frame with suitable hardware.

F. Except in round ductwork 12 inches and smaller, provide end bearings. On multiple blade dampers, provide oil-impregnated nylon or sintered bronze bearings.

G. Provide locking, indicating quadrant regulators on single and multi-blade dampers. Where rod lengths exceed 30 inches provide regulator at both ends.

H. On insulated ducts mount quadrant regulators on stand-off mounting brackets, bases, or adapters.

2.6 COMBINATION FIRE AND SMOKE DAMPERS

A. Manufacturers:
   1. Greenheck Type FSD-212 or equal for 1500 feet per minute and below.
   2. Greenheck Type FSD-311 or equal for above 1500 feet per minute.
   3. Or equal by Ruskin or Pottoff.

B. Combination Smoke/Fire Dampers shall be furnished and installed at all locations shown on the plans and/or as described on the drawing details and suitable for closure against duct operating pressure up to Design Static Pressure class.

C. Damper shall meet the requirements of NFPA 90A, 92A, and 92B and further shall be tested, rated and labeled in accordance with the latest edition on UL Standard 555 and 555S. Dampers shall be UL rated per the CBC 717.3.1.

D. Damper shall be of low leakage design qualified to UL 555S Leakage Class II.

E. Damper actuator combination shall have a UL 555S elevated temperature rating of 350 degrees Fahrenheit minimum and shall be operational and dynamic rated to operate at maximum design airflow rate at its installed location.

F. Damper shall be supplied with an appropriate actuator installed by the damper manufacturer at the time of damper fabrication. Damper actuator shall be electric type for 120-volt operation.

G. Damper blades shall be 16-gauge galvanized steel 3 Vee type with three longitudinal grooves for reinforcement. Damper frame shall be galvanized steel formed into a structural hat channel shape with reinforced corners. Bearing shall be sintered bronze sleeve type rotating in extruded holes in the damper frame. Blade seals shall be silicone rubber designed to inflate and provide a tighter seal against leakage as pressure on either side of the damper increases. Jamb seals shall be stainless steel compression type with silicone rubber backing. Blades shall be completely symmetrical relative to their axle pivot point, presenting identical resistance to airflow in either direction or pressure on either side of the damper.

H. Damper must be rated for mounting vertically (with blades running horizontally) or horizontally and be UL 555S rated for leakage and airflow in either direction through the damper.

I. Damper shall be supplied with a 165-degree Fahrenheit fusible link. Provide access doors at either side of the combination smoke/fire damper for viewing of the fusible links.

J. The specified combination smoke/fire damper shall meet the requirements for fire dampers, smoke dampers and combination fire smoke dampers established by:
   1. National Fire Protection Association NFPA Standard 90A, 92A, 92B and 101
   2. Underwriters Laboratories Standard 555 Listing #R-13317
   3. Underwriters Laboratories Standard 555S Listing #R-13447
   4. California State Fire Marshall CSFM Fire Damper Listing #3225-0981:103
   5. California State Fire Marshall CSFM Leakage Smoke Damper Listing #3230-0981:104

K. Smoke Detector will be provided by the electrical contractor to be compatible with the fire alarm system. Mechanical contractor shall install all duct-mounted smoke detectors. Electrical contractor shall connect smoke detector to smoke dampers and fire alarm panel. After installation is complete, electrical contractor shall test and verify that smoke detectors are active and functional.

2.7 DUCT SILENCERS

A. Manufacturer shall be Vibro-Acoustics, IMI Acoustics Corp, or equal.

B. General Requirements:
   1. Factory fabricated.
   2. Fire-Performance Characteristics: Adhesives, sealants, packing materials, and accessory materials shall have flame-spread index not exceeding 25 and smoke-developed index not exceeding 50 when tested according to ASTM E 84.
   3. Airstream Surfaces: Surfaces in contact with the airstream shall comply with requirements in ASHRAE 62.1.

C. Shape:
   1. Rectangular straight with splitters or baffles.
   2. Round straight with center bodies or pods.
   3. Rectangular elbow with splitters or baffles.
   4. Round elbow with center bodies or pods.
   5. Rectangular transitional with splitters or baffles.

D. Rectangular Silencer Outer Casing: ASTM A 653/A 653M, G90, galvanized sheet steel, 0.040 inch thick.

E. Round Silencer Outer Casing: ASTM A 653/A 653M, G90, galvanized sheet steel.
   1. Sheet Metal Thickness for Units up to 24 Inches in Diameter: 0.034 inch thick.
   2. Sheet Metal Thickness for Units 26 through 40 Inches in Diameter: 0.040 inch thick.
   3. Sheet Metal Thickness for Units 42 through 52 Inches in Diameter: 0.05 inch thick.
   4. Sheet Metal Thickness for Units 54 through 60 Inches in Diameter: 0.064 inch thick.

F. Inner Casing and Baffles: ASTM A 653/A 653M, G60 galvanized sheet metal, 0.034 inch thick, and with 1/8-inch- diameter perforations.

G. Special Construction:

1. Suitable for outdoor use.
2. High transmission loss to achieve STC 45.

H. Connection Sizes: Match connecting ductwork unless otherwise indicated.

I. Principal Sound-Absorbing Mechanism:
1. Controlled impedance membranes and broadly tuned resonators without absorptive media. Film-lined type with fill material.
   a. Fill Material: Moisture-proof nonfibrous material.
   b. Erosion Barrier: Polymer bag enclosing fill, and heat sealed before assembly.
2. Lining: Mylar.

J. Fabricate silencers to form rigid units that will not pulsate, vibrate, rattle, or otherwise react to system pressure variations. Do not use mechanical fasteners for unit assemblies.
1. Joints: Lock formed and sealed.
2. Suspended Units: Factory-installed suspension hooks or lugs attached to frame in quantities and spaced to prevent deflection or distortion.
3. Reinforcement: Cross or trapeze angles for rigid suspension.

K. Accessories:
1. Integral **2**-hour fire damper with access door
2. Factory-installed end caps to prevent contamination during shipping.
3. Removable splitters.
4. Airflow measuring devices.

L. Source Quality Control: Test according to ASTM E 477.
1. Record acoustic ratings, including dynamic insertion loss and generated-noise power levels with an airflow of at least 2000-fpm face velocity.
2. Leak Test: Test units for airtightness at 200 percent of associated fan static pressure or 6-inch wg static pressure, whichever is greater.

M. Capacities and Characteristics:
1. Configuration: Straight and 90-degree elbow.
2. Shape: Rectangular and Round.
3. Attenuation Mechanism: Acoustical glass fiber with protective film liner
4. Maximum Pressure Drop: Refer to schedule.
5. Casing:
   a. Attenuation: Standard .
   b. Outer Material: Galvanized steel
   c. Inner Material: Galvanized steel.[
6. Length: Refer to schedule.
7. Dimensions: Refer to schedule.
8. Face Velocity: Refer to schedule.
9. Dynamic Insertion Loss: Refer to schedule.
10. Generated Noise: Refer to schedule.
11. Accessories:
   a. Access door.
   b. Birdscreen.

2.8 TURNING VANES

A. Manufacturer shall be Ductmate, CL WARD, or equal.

B. Manufactured Turning Vanes for Metal Ducts: Curved blades of galvanized sheet steel; support with bars perpendicular to blades set; set into vane runners suitable for duct mounting.

C. General Requirements: Comply with SMACNA's "HVAC Duct Construction Standards - Metal and Flexible"; Figures 4-3, "Vanes and Vane Runners," and 4-4, "Vane Support in Elbows."

D. Vane Construction: [Single] [Double] wall.

E. Vane Construction: Single wall for ducts up to [48 inches] <Insert dimension> wide and double wall for larger dimensions.

2.9 CABLE-OPERATED REMOTE DAMPER OPERATORS

A. Manufacturer shall be Young Regulator, Pottorff or equal.

B. Description: Cable system designed for remote manual damper adjustment.

C. Tubing: Brass or galvanized spiral wire sheath.

D. Cable: Stainless steel wire with a tensile strength of at least 200,000 lbs.

E. Wall-Box:
   1. Mounting: Recessed.
   2. Wall-Box Cover Plate Material: Stainless Steel.

F. In-Ceiling Terminations
   1. Mounting: Recessed
   2. Ceiling cup and cover embedded in sheetrock ceiling.

G. Above-Ceiling Terminations:
   1. Rack and pinion controller with angle bracket.

2.10 DUCT-MOUNTED ACCESS DOORS

A. Manufacturers shall be Ventfrabrics, Ductmate, Pottorf Company or equal.

B. Fabricate in accordance with SMACNA Low Pressure Duct Construction Standards and as indicated.

C. Review locations prior to fabrication.

D. Fabricate rigid and close-fitting doors of galvanized steel with sealing gaskets and quick fastening locking devices. For insulated ductwork, install minimum one inch thick insulation with sheet metal cover.

E. Access doors smaller than 12 inches square may be secured with sash locks.

F. Provide two hinges and two sash locks for sizes up to 18 inches square, three hinges and two compression latches with outside and inside handles for sizes up to 24 x 48 inches. Provide an additional hinge for larger sizes.

G. Access doors with sheet metal screw fasteners are not acceptable.

2.11 FLEXIBLE CONNECTORS

A. Manufacturer: Ventfrabrics, Duro Dyne or equal.

B. Materials: Flame-retardant or noncombustible fabrics.

C. Coatings and Adhesives: Comply with UL 181, Class 1.

D. Metal-Edged Connectors: Factory fabricated with a fabric strip 5-3/4 inches wide attached to two strips of 2-3/4-inch- wide, 0.028-inch- thick, galvanized sheet steel or 0.032-inch thick aluminum sheets. Provide metal compatible with connected ducts.

E. Indoor System, Flexible Connector Fabric: Glass fabric double coated with neoprene.
   1. Minimum Weight: 26 oz./sq. yd.
   2. Tensile Strength: 480 lbf/inch in the warp and 360 lbf/inch in the filling.
   3. Service Temperature: Minus 40 to plus 200 deg F.

F. Outdoor System, Flexible Connector Fabric: Glass fabric double coated with weatherproof, synthetic rubber resistant to UV rays and ozone.
   1. Minimum Weight: 24 oz./sq. yd.
   2. Tensile Strength: 530 lbf/inch in the warp and 440 lbf/inch in the filling.
   3. Service Temperature: Minus 50 to plus 250 deg F.

G. High-Corrosive-Environment System, Flexible Connectors: Glass fabric with chemical-resistant coating.
   1. Minimum Weight: 14 oz./sq. yd.
   2. Tensile Strength: 450 lbf/inch in the warp and 340 lbf/inch in the filling.
   3. Service Temperature: Minus 67 to plus 500 deg F.

H. Thrust Limits: Combination coil spring and elastomeric insert with spring and insert in compression, and with a load stop. Include rod and angle-iron brackets for attaching to fan discharge and duct.
   1. Frame: Steel, fabricated for connection to threaded rods and to allow for a maximum of 30 degrees of angular rod misalignment without binding or reducing isolation efficiency.
   2. Outdoor Spring Diameter: Not less than 80 percent of the compressed height of the spring at rated load.
   3. Minimum Additional Travel: 50 percent of the required deflection at rated load.
   4. Lateral Stiffness: More than 80 percent of rated vertical stiffness.
   5. Overload Capacity: Support 200 percent of rated load, fully compressed, without deformation or failure.
   6. Elastomeric Element: Molded, oil-resistant rubber or neoprene.

7. Coil Spring: Factory set and field adjustable for a maximum of 1/4-inch (6-mm) movement at start and stop.

2.12 DUCT ACCESSORY HARDWARE

A. Instrument Test Holes: Cast iron or cast aluminum to suit duct material, including screw cap and gasket. Size to allow insertion of pitot tube and other testing instruments and of length to suit duct-insulation thickness.

B. Adhesives: High strength, quick setting, neoprene based, waterproof, and resistant to gasoline and grease.

PART 3 - EXECUTION

3.1 INSTALLATION

A. Install duct accessories according to applicable details in SMACNA's "HVAC Duct Construction Standards - Metal and Flexible" for metal ducts and in NAIMA AH116, "Fibrous Glass Duct Construction Standards," for fibrous-glass ducts.

B. Install duct accessories of materials suited to duct materials; use galvanized-steel accessories in galvanized-steel and fibrous-glass ducts, stainless-steel accessories in stainless-steel ducts, and aluminum accessories in aluminum ducts.

C. Compliance with ASHRAE/IESNA 90.1-2004 includes Section 6.4.3.3.3 - "Shutoff Damper Controls," restricts the use of backdraft dampers, and requires control dampers for certain applications. Install backdraft and control dampers at inlet of exhaust fans or exhaust ducts as close as possible to exhaust fan unless otherwise indicated.

D. Install volume dampers at points on supply, return, and exhaust systems where branches extend from larger ducts. Where dampers are installed in ducts having duct liner, install dampers with hat channels of same depth as liner, and terminate liner with nosing at hat channel.
   1. Install steel volume dampers in steel ducts.
   2. Install aluminum volume dampers in aluminum ducts.

E. Set dampers to fully open position before testing, adjusting, and balancing.

F. Install test holes at fan inlets and outlets and elsewhere as indicated.

G. Install fire and smoke dampers according to UL listing.

H. Connect ducts to duct silencers rigidly.

I. Install duct access doors on sides of ducts to allow for inspecting, adjusting, and maintaining accessories and equipment at the following locations:
   1. On both sides of duct coils.
   2. Upstream from duct filters.

3. At outdoor-air intakes and mixed-air plenums.
4. At drain pans and seals.
5. Downstream from backdraft dampers.
6. Adjacent to and close enough to fire or smoke dampers, to reset or reinstall fusible links. Access doors for access to fire or smoke dampers having fusible links shall be pressure relief access doors and shall be outward operation for access doors installed upstream from dampers and inward operation for access doors installed downstream from dampers.
7. At each change in direction and at maximum 50-foot spacing.
8. Upstream from turning vanes.
9. Upstream or downstream from duct silencers.
10. Control devices requiring inspection.
11. Elsewhere as indicated.

J. Install access doors with swing against duct static pressure.

K. Access Door Sizes:
1. One-Hand or Inspection Access: 8 by 5 inches
2. Two-Hand Access: 12 by 6 inches
3. Head and Hand Access: 18 by 10 inches
4. Head and Shoulders Access: 21 by 14 inches
5. Body Access: 25 by 14 inches
6. Body plus Ladder Access: 25 by 17 inches

L. Label access doors according to Section 230553 "Identification for HVAC Piping and Equipment" to indicate the purpose of access door.

M. Install flexible connectors to connect ducts to equipment.

N. For fans developing static pressures of 5-inch wg and more, cover flexible connectors with loaded vinyl sheet held in place with metal straps.

O. Where indicated on Drawings, connect diffusers or light troffer boots to ducts directly or with maximum 60-inch lengths of flexible duct clamped or strapped in place.

P. Connect flexible ducts to metal ducts with draw bands.

Q. Install duct test holes where required for testing and balancing purposes.

R. Install thrust limits at centerline of thrust, symmetrical on both sides of equipment. Attach thrust limits at centerline of thrust and adjust to a maximum of 1/4-inch movement during start and stop of fans.

S. REMOTE DAMPER OPERATORS
1. Install remote damper operators for balancing dampers above hard-lid ceilings, dampers concealed behind walls, and dampers concealed within shafts to facilitate ease of access and adjustment.
2. Ensure that remote damper operator routing does not interfere with other building systems, such as electrical, plumbing, or fire suppression systems.
3. Coordinate with other trades to avoid conflicts and ensure a clean and organized installation.

4. Electronically-operated remote damper operators:
   a. Remote damper operator wall/ceiling plate accessory requirements:
      1) One to six port options are available. Contractor to use the maximum number of ports to minimize the number of wall/ceiling plates based on the maximum allowable cable lengths.
      2) Wall/ceiling plates to be located in the ceiling. Contractor to align all wall plates within a room/corridor to maintain a uniform appearance.
      3) Provide a minimum of three battery-operated remotes for the Owner's use after installation.
5. Cable-operated remote damper operators;
   a. Terminate operator hubs at access panels serving other equipment access and service needs to minimize the number of access panels required in any area.
   b. Where multiple operator hubs serve a single room or zone, consolidate terminations to a common access panel or service point to reduce ceiling penetrations.
   c. For ceilings where access panels are undesirable, the contractor may propose to terminate operator hubs above the ceiling grid in an adjacent space with a T-bar ceiling, subject to Design Professional approval.
   d. In such cases, label the ceiling in the adjacent space to indicate the location and purpose of the remote operator access.
   e. Refer to the plans for locations of ceiling-embedded termination points. Unless noted otherwise, above-ceiling termination or termination in a mechanical room is preferred.
6. Labeling and Identification
   a. All remote operator hubs shall be permanently labeled with durable, legible tags. Labels shall indicate:
      1) The service provided by the hub (e.g., "Remote Operator for Damper D-101").
      2) The associated damper location and identification number.
   b. Labels must be visible and positioned to facilitate rapid identification during maintenance or service activities.

3.2 FIELD QUALITY CONTROL

A. Tests and Inspections:
   1. Operate dampers to verify full range of movement.
   2. Inspect locations of access doors and verify that purpose of access door can be performed.
   3. Operate fire, smoke, and combination fire and smoke dampers to verify full range of movement and verify that proper heat-response device is installed.
   4. Inspect turning vanes for proper and secure installation.
   5. Verify the functionality of all remote damper operators during the commissioning process. Operate remote damper operators to verify full range of movement of operator and damper.

END OF SECTION 233300

SECTION 233346 - FLEXIBLE DUCTS

PART 1 - GENERAL

1.1 RELATED DOCUMENTS

A. Drawings and general provisions of the Contract, including General and Supplementary Conditions and Division 01 Specification Sections, apply to this Section.

1.2 SUMMARY

A. Section Includes:
   1. Non-insulated flexible ducts.
   2. Insulated flexible ducts.

1.3 ACTION SUBMITTALS

A. Submittals shall be formatted per Section 230000 “General Mechanical Requirements”. The manufacturer shall resubmit the specification section showing compliance with each respective paragraphs and specified items and features in that particular specification section. All **exceptions** shall be clearly identified by referencing respective paragraph and other requirements. Next to each specification item, indicate the following:
   1. “No Exception Taken”.
   2. “Exception”. All exceptions shall be clearly identified by referencing respective paragraph and other requirements along with proposed alternative.

B. Product Data: For each type of product.

C. Shop Drawings: For flexible ducts.
   1. Include plans showing locations and mounting and attachment details.

1.4 INFORMATIONAL SUBMITTALS

A. Coordination Drawings: Reflected ceiling plans, drawn to scale, on which ceiling-mounted access panels and access doors required for access to duct accessories are shown and coordinated with each other, using input from installers of the items involved.

PART 2 - PRODUCTS

2.1 ASSEMBLY DESCRIPTION

A. Comply with NFPA 90A, "Installation of Air Conditioning and Ventilating Systems," and with NFPA 90B, "Installation of Warm Air Heating and Air Conditioning Systems."

B. Comply with SMACNA's "HVAC Duct Construction Standards - Metal and Flexible" for acceptable materials, material thicknesses, and duct construction methods unless otherwise indicated. Sheet metal materials shall be free of pitting, seam marks, roller marks, stains, discolorations, and other imperfections.

C. Comply with the Air Diffusion Council's "ADC Flexible Air Duct Test Code FD 72-R1."

D. Comply with ASTM E 96/E 96M, "Test Methods for Water Vapor Transmission of Materials."

2.2 NON-INSULATED FLEXIBLE DUCTS

A. Manufacturers:
1. Thermaflex S-TL
2. Or submitted equal approved by the Engineer of Record.

B. Non-Insulated, Flexible Duct: UL 181, Class 1, coated woven fiberglass supported by helically wound, coated spring-steel wire.
1. Pressure Rating: 10-inch wg positive and 1.0-inch wg negative.
2. Maximum Air Velocity: 6000 fpm.
3. Temperature Range: Minus 10 to plus 160 deg F.

2.3 INSULATED FLEXIBLE DUCTS

A. Manufacturers:
1. Thermaflex G-KM
2. JP Lamborn Co. MF-05
3. Or submitted equal approved by the Engineer of Record.

B. Insulated, Flexible Duct: UL 181, Class 1, GREENGUARD Gold Certified, black polymer film or coated fiberglass cloth fabric supported by helically wound, spring-steel wire; fibrous-glass insulation; polyethylene fire retardant vapor-barrier film; factory installed collars.
1. Pressure Rating: 3-inch wg positive and 1.0-inch wg negative.
2. Maximum Air Velocity: 4000 fpm.
3. Temperature Range: 0 to 160 deg F.
4. Insulation R-Value: R4.2.

2.4 FLEXIBLE DUCT CONNECTORS

A. Clamps: Stainless-steel band with stainless steel hex screw to tighten band with a worm-gear action in sizes 3 through 18 inches, to suit duct size.

B. For flexible duct connectors with metal collars, use minimum three sheet metal screws and duct sealer

PART 3 - EXECUTION

3.1 INSTALLATION

A. Install flexible ducts according to applicable details in SMACNA's "HVAC Duct Construction Standards - Metal and Flexible" for metal ducts and in NAIMA AH116, "Fibrous Glass Duct Construction Standards," for fibrous-glass ducts.

B. Install in indoor applications only. Flexible ductwork should not be exposed to UV lighting.

C. As indicated on Drawings, connect diffusers or light troffer boots to ducts directly or with maximum 60-inch lengths of flexible duct clamped or strapped in place.

D. Connect flexible ducts to metal ducts with bands.

E. Install duct test holes where required for testing and balancing purposes.

F. Installation:
1. Install ducts fully extended.
2. Do not bend ducts across sharp corners.
3. Bends of flexible ducting shall not exceed a minimum of one duct diameter.
4. Avoid contact with metal fixtures, water lines, pipes, or conduits.
5. Install flexible ducts in a direct line, without sags, twists, or turns.

G. Supporting Flexible Ducts:
1. Suspend flexible ducts with bands 1-1/2 inches wide or wider and spaced a maximum of 48 inches apart. Maximum centerline sag between supports shall not exceed 1/2 inch per 12 inches.
2. Install extra supports at bends placed approximately one duct diameter from center line of the bend.
3. Ducts may rest on ceiling joists or truss supports. Spacing between supports shall not exceed the maximum spacing per manufacturer's written installation instructions.
4. Vertically installed ducts shall be stabilized by support straps at a maximum of 72 inches o.c.

END OF SECTION 233346

SECTION 233423 - HVAC FANS

PART 1 - GENERAL

1.1 RELATED DOCUMENTS

A. Drawings and general provisions of the Contract, including General and Supplementary Conditions and Division 01 Specification Sections, apply to this Section.

1.2 SUMMARY

A. Section Includes:
1. Centrifugal roof ventilators.
2. Ceiling-mounted ventilators.
3. Propeller fans.
4. Mixed-flow fans

1.3 ACTION SUBMITTALS

A. Submittals shall be formatted per Section 230000 “General Mechanical Requirements”. The manufacturer shall resubmit the specification section showing compliance with each respective paragraphs and specified items and features in that particular specification section. All **exceptions** shall be clearly identified by referencing respective paragraph and other requirements. Next to each specification item, indicate the following:
1. “No Exception Taken”.
2. “Exception”. All exceptions shall be clearly identified by referencing respective paragraph and other requirements along with proposed alternative.

B. Product Data: For each type of product indicated. Include rated capacities, operating characteristics, and furnished specialties and accessories. Also include the following:
1. Certified fan performance curves with system operating conditions indicated.
2. Certified fan sound-power ratings.
3. Motor ratings and electrical characteristics, plus motor and electrical accessories.
4. Material thickness and finishes, including color charts.
5. Dampers, including housings, linkages, and operators.
6. Roof curbs.
7. Fan speed controllers.

C. Shop Drawings:
1. Include plans, elevations, sections, and attachment details.
2. Include details of equipment assemblies. Indicate dimensions, weights, loads, required clearances, method of field assembly, components, and location and size of each field connection.
3. Include diagrams for power, signal, and control wiring.

1.4 INFORMATIONAL SUBMITTALS

A. Field quality-control reports.

1.5 CLOSEOUT SUBMITTALS

A. Operation and Maintenance Data: For HVAC fans to include in emergency, operation, and maintenance manuals.

1.6 MAINTENANCE MATERIAL SUBMITTALS

A. Furnish extra materials that match products installed and that are packaged with protective covering for storage and identified with labels describing contents.
   1. Belts: One set(s) for each belt-driven unit.

1.7 QUALITY ASSURANCE

A. Electrical Components, Devices, and Accessories: Listed and labeled as defined in NFPA 70, by a qualified testing agency, and marked for intended location and application.

B. AMCA Compliance: Fans shall have AMCA-Certified performance ratings and shall bear the AMCA-Certified Ratings Seal.

C. UL Standards: HVAC fans shall comply with UL 705. HVAC fans for use for restaurant kitchen exhaust shall also comply with UL 762.

1.8 COORDINATION

A. Coordinate size and location of structural-steel support members.

B. Coordinate sizes and locations of concrete bases with actual equipment provided.

C. Coordinate sizes and locations of roof curbs, equipment supports, and roof penetrations with actual equipment provided.

D. Provide access around equipment as specified on plans and/or according to manufacturer’s requirements.

1.9 WARRANTY

A. Manufacturer's Warranty: Submit, for Owner's acceptance, manufacturer's standard warranty document executed by authorized company official. Manufacturer's warranty is in addition to, and not a limitation of, other rights Owner may have under Contract Documents

B. The warranty of this equipment is to be free from defects in material and workmanship for a period of one year from the purchase date. Any units or parts which prove defective during the

warranty period will be replaced at the Manufacturers option when returned to Manufacturer, transportation prepaid.

PART 2 - PRODUCTS

2.1 PERFORMANCE REQUIREMENTS

A. Unusual Service Conditions
   1. Base fan-performance ratings on the following:
      a. Ambient Temperature: 70 deg F.
      b. Altitude: 0 feet above sea level.

B. Delegated Design: Engage a qualified professional engineer, as defined in Section 014000 "Quality Requirements," to design vibration isolation and seismic restraints, including comprehensive engineering analysis by a qualified professional engineer, using performance requirements and design criteria indicated.

C. Seismic Performance: HVAC power ventilators shall withstand the effects of earthquake motions determined according to ASCE/SEI 7.
   1. The term "withstand" means "the unit will remain in place without separation of any parts from the device when subjected to the seismic forces specified and the unit will be fully operational after the seismic event."
   2. Component Importance Factor: 1.5.

2.2 AXIAL ROOF VENTILATORS

A. Manufacturers:
   1. Greenheck Fan Company.
   2. Loren Cook Company.
   3. PennBarry
   4. Twin City Fans

B. Housing: Heavy-gauge, removable, spun-aluminum dome top and outlet baffle; square, one-piece, hinged, aluminum base.

C. Fan Wheel: Steel hub and blades.

D. Accessories:
   1. Disconnect Switch: Nonfusible type, with thermal-overload protection mounted outside fan housing and weather rated, factory wired through an internal aluminum conduit.
   2. Bird Screens: Removable, 1/2-inch mesh, aluminum or brass wire.
   3. Dampers: Counterbalanced, parallel-blade, backdraft dampers mounted in curb base; factory set to close when fan stops.
   4. Motorized Dampers: Parallel-blade dampers mounted in curb base with electric actuator; wired to close when fan stops.
   5. Stack hood with built-in backdraft dampers.
   6. Extended lubrication lines.

E. Prefabricated Roof Curbs: Galvanized steel; mitered and welded corners; 1-1/2-inch- thick, rigid, fiberglass insulation adhered to inside walls; and 1-1/2-inch wood nailer. Size as required to suit roof opening and fan base.
   1. Overall Height: 18 inches.
   2. Sound Curb: Curb with sound-absorbing insulation.
   3. Pitch Mounting: Manufacture curb for roof slope.
   4. Metal Liner: Galvanized steel.
   5. Burglar Bars: 1/2-inchthick steel bars welded in place to form 6-inch squares.
   6. Mounting Pedestal: Galvanized steel with removable access panel.

2.3 CEILING-MOUNTED VENTILATORS

A. Manufacturers:
   1. Greenheck Fan Company.
   2. Loren Cook Company.
   3. PennBarry
   4. Twin City Fans

B. Housing: Steel, lined with acoustical insulation.

C. Fan Wheel: Centrifugal wheels directly mounted on motor shaft. Fan shrouds, motor, and fan wheel removable for service.

D. Back-draft damper: Integral.

E. Grille: Painted aluminum, louvered grille with flange on intake and thumbscrew or spring retainer attachment to fan housing.

F. Electrical Requirements: Junction box for electrical connection on housing and receptacle for motor plug-in.

G. Accessories:
   1. Variable-Frequency Motor Controller: Solid-state control to reduce speed from 100 to less than 50 percent.
   2. Manual Starter Switch: Single-pole rocker switch assembly with cover and pilot light.
   3. Time-Delay Switch: Assembly with single-pole rocker switch, timer, and cover plate.
   4. Motion Sensor: Motion detector with adjustable shutoff timer.
   5. Ceiling Radiation Damper: Fire-rated assembly with ceramic blanket, stainless steel springs, and fusible link.
   6. Filter: Washable aluminum to fit between fan and grille.
   7. Isolation: Rubber-in-shear vibration isolators.
   8. Manufacturer's standard roof jack or wall cap, and transition fittings.

2.4 CENTRIFUGAL VENTILATORS - ROOF DOWNBLAST

A. Manufacturers:
   1. Greenheck Fan Company.

2. Loren Cook Company.
3. PennBarry
4. Twin City Fans

B. Housing: Downblast; removable galvanized-steel mushroom-domed top; square, one-piece aluminum base with venturi inlet cone.

C. Fan Wheels: Aluminum hub and wheel with backward-inclined blades[**;**

D. Accessories:
1. Variable-Frequency Motor Controller: Solid-state control to reduce speed from 100 to less than 50 percent.
2. Disconnect Switch: Nonfusible type, with thermal-overload protection mounted outside fan housing and weather rated, factory wired through an internal aluminum conduit.
3. Bird Screens: Removable, 1/2-inch mesh, aluminum or brass wire.
4. Dampers: Counterbalanced, parallel-blade, backdraft dampers mounted in curb base; factory set to close when fan stops.
5. Motorized Dampers: Parallel-blade dampers mounted in curb base with electric actuator; wired to close when fan stops.
6. Spark-resistant, all-aluminum wheel construction.
7. Mounting Pedestal: Galvanized steel with removable access panel.

E. Prefabricated Roof Curbs: Galvanized steel; mitered and welded corners; 1-1/2-inch- thick, rigid, fiberglass insulation adhered to inside walls; and 1-1/2-inch wood nailer. Size as required to suit roof opening and fan base.
1. Overall Height: 18 inches.
2. Sound Curb: Curb with sound-absorbing insulation.
3. Hinged sub-base to provide access to damper or as cleanout for grease applications.
4. Burglar Bars: 1/2 inch thick steel bars welded in place to form 6-inch squares.
5. Pitch Mounting: Manufacture curb for roof slope.
6. Metal Liner: Galvanized steel.
7. Mounting Pedestal: Galvanized steel with removable access panel.

2.5 CENTRIFUGAL VENTILATORS - ROOF UPBLAST OR SIDEWALL

A. Manufacturers:
1. Greenheck Fan Company.
2. Loren Cook Company.
3. PennBarry
4. Twin City Fans

B. Configuration: Centrifugal roof upblast ventilator.

C. Housing: Removable galvanized-steel, mushroom-domed top; square, one-piece aluminum base with venturi inlet cone.
1. Upblast Units: Provide spun-aluminum discharge baffle to direct discharge air upward, with rain and snow drains.

D. Fan Wheels: Aluminum hub and wheel with backward-inclined blades**.**

E. Accessories:
   1. Variable-Frequency Motor Controller: Solid-state control to reduce speed from 100 to less than 50 percent.
   2. Disconnect Switch: Nonfusible type, with thermal-overload protection mounted outside fan housing and weather rated, factory wired through an internal aluminum conduit.
   3. Bird Screens: Removable, 1/2-inch mesh, aluminum or brass wire.
   4. Dampers: Counterbalanced, parallel-blade, backdraft dampers mounted in curb base; factory set to close when fan stops.
   5. Motorized Dampers: Parallel-blade dampers mounted in curb base with electric actuator; wired to close when fan stops.
   6. Spark-resistant, all-aluminum wheel construction.
   7. Mounting Pedestal: Galvanized steel with removable access panel.
   8. Wall Mount Adapter: Attach wall-mounted fan to wall.
   9. Restaurant Kitchen Exhaust: UL 762 listed for grease-laden air exhaust.

F. Prefabricated Roof Curbs: Galvanized steel; mitered and welded corners; 1-1/2-inch- thick, rigid, fiberglass insulation adhered to inside walls; and 1-1/2-inch wood nailer. Size as required to suit roof opening and fan base.
   1. Configuration: Built-in raised cant and mounting flange

G. Prefabricated Kitchen Exhaust Roof Curbs: Galvanized steel; mitered and welded corners; ventilation openings on all sides to ventilate curb interstitial space. Size as required to suit roof opening and fan base.
   1. Configuration: Built-in raised cant and mounting flange.
   2. Overall Height: 18 inches.
   3. Sound Curb: Curb with sound-absorbing insulation and galvanized metal liner.
   4. Hinged sub-base to provide access to damper or as cleanout for grease applications.
   5. Burglar Bars: 1/2-inch thick steel bars welded in place to form 6-inch squares.
   6. Pitch Mounting: Manufacture curb for roof slope.
   7. Metal Liner: Galvanized steel.
   8. Mounting Pedestal: Galvanized steel with removable access panel.
   9. Vented Curb: For kitchen exhaust; 12-inch- high galvanized steel; unlined, with louvered vents in vertical sides.
   10. NFPA 96 code requirements for commercial cooking operations.
   11. Kitchen Hood Exhaust: UL 762 listed for grease-laden air.

2.6 SIDEWALL PROPELLER FANS

A. Manufacturers:
   1. Greenheck Fan Company.
   2. Loren Cook Company.
   3. PennBarry
   4. Twin City Fans

B. Housing: Galvanized-steel sheet with flanged edges and integral orifice ring, with baked-enamel finish coat applied after assembly.

C. Fan Wheels: Formed-steel blades riveted to heavy-gauge steel spider bolted to cast-iron hub.

D. Fan Wheel: Replaceable, cast-aluminum, airfoil blades fastened to cast-aluminum hub; factory set pitch angle of blades.

E. Fan Drive: Direct-drive motor mounted in airstream, factory wired to disconnect switch located on outside of fan housing.

F. Accessories:
1. Disconnect Switch: Nonfusible type, with thermal-overload protection mounted inside fan housing, factory wired through an internal aluminum conduit.
2. Dampers: Counterbalanced, parallel-blade, backdraft dampers factory set to close when fan stops.
3. Motorized Dampers: Parallel-blade dampers with electric actuator wired to close when fan stops.
4. Motor-Side Back Guard: Galvanized steel, complying with OSHA specifications, removable for maintenance.
5. Wall Sleeve: Galvanized steel to match fan and accessory size.
6. Weathershield Hood: Galvanized steel to match fan and accessory size.
7. Weathershield Front Guard: Galvanized steel with expanded metal screen.

2.7 UPBLAST PROPELLER ROOF EXHAUST FANS

A. Manufacturers:
1. Greenheck Fan Company.
2. Loren Cook Company.
3. PennBarry
4. Twin City Fans

B. Configuration: Upblast propeller ventilator.

C. Wind Band, Fan Housing, and Base: Reinforced and braced galvanized-steel , containing galvanized-steel butterfly dampers and rain trough, motor and drive assembly, and fan wheel.
1. Damper Rods: Steel with bronze bearings.
2. Hinged Subbase: Galvanized-steel hinged arrangement permitting service and maintenance.

D. Fan Wheel: Replaceable, cast-aluminum, airfoil blades fastened to cast-aluminum hub; factory set pitch angle of blades

E. Accessories:
1. Disconnect Switch: Nonfusible type, with thermal-overload protection mounted outside fan housing and weather rated, factory wired through an internal aluminum conduit.
2. Bird Screens: Removable, 1/2-inch mesh, aluminum or brass wire.
3. Inspection Door: Hinged.
4. Dampers: Counterbalanced, parallel-blade, backdraft dampers mounted in curb base; factory set to close when fan stops.
5. Motorized Dampers: Parallel-blade dampers mounted in curb base with electric actuator; wired to close when fan stops.
6. Extended Lubrication Lines.
7. Kitchen Hood Exhaust: UL 762 listed for grease-laden air exhaust.

F. Prefabricated Roof Curbs: Galvanized steel; mitered and welded corners; 1-1/2-inch- thick, rigid, fiberglass insulation adhered to inside walls; and 1-1/2-inch wood nailer. Size as required to suit roof opening and fan base.
   1. Configuration: Built-in raised cant and mounting flange.

G. Prefabricated Kitchen Exhaust Roof Curbs: Galvanized steel; mitered and welded corners; ventilation openings on all sides to ventilate curb interstitial space. Size as required to suit roof opening and fan base.
   1. Configuration: Built-in raised cant and mounting flange.
   2. Overall Height: 18 inches.
   3. Sound Curb: Curb with sound-absorbing insulation.
   4. Hinged sub-base to provide access to damper or as cleanout for grease applications.
   5. Burglar Bars: 1/2-inch thick steel bars welded in place to form 6-inch squares.
   6. Pitch Mounting: Manufacture curb for roof slope.
   7. Metal Liner: Galvanized steel.
   8. Mounting Pedestal: Galvanized steel with removable access panel.
   9. Vented Curb: For kitchen exhaust; 12-inch- high galvanized steel; unlined, with louvered vents in vertical sides.
   10. NFPA 96 code requirements for commercial cooking operations.
   11. UL 762 listed for grease-laden air.

2.8 MOTORS

A. Comply with NEMA designation, temperature rating, service factor, and efficiency requirements for motors specified in Section 230513 "Common Motor Requirements for HVAC Equipment."
   1. Motor Sizes: Minimum size as indicated. If not indicated, large enough so driven load will not require motor to operate in service factor range above 1.0.

2.9 SOURCE QUALITY CONTROL

A. Electrical Components, Devices, and Accessories: Listed and labeled as defined in NFPA 70, by an NRTL, and marked for intended location and application.

B. AMCA Certification: Fans shall comply with AMCA 11 and bear the AMCA-Certified Ratings Seal.

C. Fan Sound Ratings: Comply with AMCA 311, and label fans with the AMCA-Certified Ratings Seal. Sound ratings shall comply with AMCA 301. The fans shall be tested according to AMCA 300.

D. Fan Performance Ratings: Comply with AMCA 211 and label fans with AMCA-Certified Rating Seal. The fans shall be tested for air performance - flow rate, fan pressure, power, fan efficiency, air density, speed of rotation, and fan efficiency - according to AMCA 210/ASHRAE 51.

E. Operating Limits: Classify according to AMCA 99.

F. UL Standards: Power ventilators shall comply with UL 705. Power ventilators for use for restaurant kitchen exhaust shall also comply with UL 762.

PART 3 - EXECUTION

3.1 INSTALLATION

A. Install HVAC fans level and plumb.

B. Equipment Mounting:
   1. Comply with requirements for vibration isolation and seismic control devices specified in Section 230548 "Vibration and Seismic Controls for HVAC."
   2. Comply with requirements for vibration isolation devices specified in Section 230548.13 "Vibration Controls for HVAC."

C. Secure roof-mounted fans to roof curbs with cadmium-plated hardware. See Section 077200 "Roof Accessories" for installation of roof curbs.

D. Ceiling Units: Suspend units from structure per Drawings.

E. Support suspended units from structure using threaded steel rods and spring hangers having a static deflection of 1 inch. Vibration-control devices are specified in Section 230548 "Vibration and Seismic Controls for HVAC."

F. Install units with clearances for service and maintenance of fans, motors and all other components that may need access

G. Label units according to requirements specified in Section 230553 "Identification for HVAC Piping and Equipment."

3.2 CONNECTIONS

A. Drawings indicate general arrangement of ducts and duct accessories. Make final duct connections with flexible connectors. Flexible connectors are specified in Section 233300 "Air Duct Accessories."

B. Install ducts adjacent to HVAC fans to allow service and maintenance.

C. Ground equipment according to Section 260526 "Grounding and Bonding for Electrical Systems."

D. Connect wiring according to Section 260519 "Low-Voltage Electrical Power Conductors and Cables."

3.3 FIELD QUALITY CONTROL

A. Perform tests and inspections.

1. Manufacturer's Field Service: Engage a factory-authorized service representative to inspect components, assemblies, and equipment installations, including connections, and to assist in testing.

B. Tests and Inspections:
1. Verify that shipping, blocking, and bracing are removed.
2. Verify that unit is secure on mountings and supporting devices and that connections to ducts and electrical components are complete. Verify that proper thermal-overload protection is installed in motors, starters, and disconnect switches.
3. Verify that cleaning and adjusting are complete.
4. Disconnect fan drive from motor, verify proper motor rotation direction, and verify fan wheel free rotation and smooth bearing operation. Reconnect fan drive system, align and adjust belts, and install belt guards.
5. Adjust belt tension.
6. Adjust damper linkages for proper damper operation.
7. Verify lubrication for bearings and other moving parts.
8. Verify that manual and automatic volume control and fire and smoke dampers in connected ductwork systems are in fully open position.
9. Disable automatic temperature-control operators, energize motor and adjust fan to indicated rpm, and measure and record motor voltage and amperage.
10. Shut unit down and reconnect automatic temperature-control operators.
11. Remove and replace malfunctioning units and retest as specified above.

C. Test and adjust controls and safeties. Replace damaged and malfunctioning controls and equipment.

D. Prepare test and inspection reports.

3.4 ADJUSTING

A. Adjust damper linkages for proper damper operation.

B. Adjust belt tension.

C. Comply with requirements in Section 230593 "Testing, Adjusting, and Balancing for HVAC" for testing, adjusting, and balancing procedures.

D. Replace fan and motor pulleys as required to achieve design airflow.

E. Lubricate bearings.

END OF SECTION 233423

SECTION 233713 – DIFFUSERS, REGISTERS, AND GRILLES

PART 1 - GENERAL

1.1 RELATED DOCUMENTS

A. Drawings and general provisions of the Contract, including General and Supplementary Conditions and Division 01 Specification Sections, apply to this Section.

1.2 SUMMARY

A. Section Includes:
1. Round ceiling diffusers.
2. Architectural plaque diffusers.
3. Perforated diffusers.
4. Louver face diffusers.
5. Linear bar diffusers.
6. Linear slot diffusers.
7. High-capacity drum louver diffusers.
8. Modular-core supply grille diffusers.
9. Radial diffusers for critical environment applications
10. Nozzle diffusers.
11. Spiral duct grilles.
12. Adjustable blade face grilles.
13. Fixed face grilles.
14. Security Registers

B. Related Requirements:
1. Section 233300 "Air Duct Accessories" for fire and smoke dampers and volume-control dampers not integral to diffusers.

1.3 ACTION SUBMITTALS

A. Submittals shall be formatted per Section 230000 “General Mechanical Requirements”. The manufacturer shall resubmit the specification section showing compliance with each respective paragraphs and specified items and features in that particular specification section. All **exceptions** shall be clearly identified by referencing respective paragraph and other requirements. Next to each specification item, indicate the following:
1. “No Exception Taken”.
2. “Exception”. All exceptions shall be clearly identified by referencing respective paragraph and other requirements along with proposed alternative.

B. Product Data: For each type of product.
1. Data Sheet: Indicate materials of construction, finish, and mounting details; and performance data including throw and drop, static-pressure drop, and noise ratings.

2. Diffuser and Grille Schedule: Indicate drawing designation, room location, quantity, model number, size, and accessories furnished.

1.4 INFORMATIONAL SUBMITTALS

A. Coordination Drawings: Reflected ceiling plans, drawn to scale, on which the following items are shown and coordinated with each other, using input from installers of the items involved:
   1. Ceiling-mounted items including lighting fixtures, diffusers, grilles, speakers, sprinklers, access panels, and special moldings.
   2. Duct access panels.

B. Source quality-control reports.

PART 2 - PRODUCTS

2.1 ROUND CEILING DIFFUSERS

A. Manufacturers:
   1. Titus R-OMNI .
   2. Krueger.
   3. Price Industries.

B. Devices shall be specifically designed for variable-air-volume flows.

C. Material: Steel.

D. Finish: Baked enamel, white

E. Face Style: Two cone.

F. Mounting: Duct connection.

G. Accessories:
   1. Equalizing grid.
   2. Plaster ring.
   3. Safety chain.
   4. Wire guard.
   5. Sectorizing baffles.
   6. Operating rod extension.

2.2 ARCHITECTURAL PLAQUE DIFFUSERS

A. Manufacturers:
   1. Titus OMNI.
   2. Krueger.
   3. Price Industries.

B. Devices shall be specifically designed for variable-air-volume flows.

C. Material: Steel.

D. Finish: Baked enamel, white

E. Face Style: Refer to Drawings.

F. Mounting: Per schedule.

G. Accessories:
1. Equalizing grid.
2. Plaster ring.
3. Safety chain.
4. Wire guard.
5. Sectorizing baffles.
6. Operating rod extension.

2.3 PERFORATED DIFFUSERS

A. Manufacturers:
1. Titus PAR
2. Krueger.
3. Price Industries.

B. Devices shall be specifically designed for variable-air-volume flows.

C. Material: Steel backpan and pattern controllers, with steel face.

D. Finish: Baked enamel, white.

E. Duct Inlet: Refer to Drawings.

F. Face Style: Refer to Drawings.

G. Mounting: Per schedule. Per schedule.

H. Accessories:
1. Equalizing grid.
2. Plaster ring.
3. Safety chain.
4. Wire guard.
5. Sectorizing baffles.
6. Operating rod extension.

2.4 GRILLES

A. Manufacturers:

1. Titus.
2. Krueger.
3. Price Industries.

B. Fixed Face Grille EG-3 and RG-3:
1. Material: Steel.
2. Finish: color selected by Architect.
3. Face Blade Arrangement: Horizontal ½ inch. apart.
4. Face Arrangement: Perforated core. Retain first subparagraph below if mounting frame is required.
5. Mounting Frame: Per schedule.

C. Security Grille CD-3, RG-3, and EG-2
1. Security Level: Security risk resistant.
2. Application: Ducted return
3. Material: Steel
4. Material Thickness: 0.19 inch.
5. Finish: Per architect's direction
6. Face Arrangement:
   a. Shape: Square and/or Rectangular.
   b. Design: Perforated.
   c. Frame: Yes.
   d. Deflection: Zero degrees.
   e. Core: Louvered.
   f. 3/16 inch thick, front lattice plate with square holes and 1-inchfrets, 0.135-inch wire mesh, and 1/4-inch thick backer plate.
7. Wall Sleeve: 3/16 inch welded to face.
8. Mounting: 1-1/4-by-1-1/4-by-3/16-inch cast-in-place frame and tamperproof machine screws.

2.5 ACCESSORIES

A. Flexible Duct Support
1. Manufacturers: Titus FlexRight (no known equal)
   a. Radius forming brace to support 4-inch through 16-inch diameter flexible air ducts.
   b. Provide nylon cable ties to secure flex duct to FlexRight brace.

2.6 SOURCE QUALITY CONTROL

A. Verification of Performance: Rate diffusers according to ASHRAE 70, "Method of Testing for Rating the Performance of Air Outlets and Inlets."

PART 3 - EXECUTION

3.1 EXAMINATION

A. Examine areas where diffusers are installed for compliance with requirements for installation tolerances and other conditions affecting performance of equipment.

B. Proceed with installation only after unsatisfactory conditions have been corrected.

3.2 INSTALLATION

A. Install diffusers level and plumb.

B. Ceiling-Mounted Outlets and Inlets: Drawings indicate general arrangement of ducts, fittings, and accessories. Air outlet and inlet locations have been indicated to achieve design requirements for air volume, noise criteria, airflow pattern, throw, and pressure drop. Make final locations where indicated, as much as practical. For units installed in lay-in ceiling panels, locate units in the center of panel. Where architectural features or other items conflict with installation, notify Architect for a determination of final location.

C. Install diffusers with airtight connections to ducts and to allow service and maintenance of dampers, air extractors, and fire dampers.

D. Install Titus FlexRight brace at all flexible duct-to-diffuser connections.

3.3 ADJUSTING

A. After installation, adjust diffusers to air patterns indicated, or as directed, before starting air balancing.

END OF SECTION 233713

SECTION 237416 – PACKAGED , ROOFTOP AIR-CONDITIONING UNITS

PART 1 - GENERAL

1.1 RELATED DOCUMENTS

A. Drawings and general provisions of the Contract, including General and Supplementary Conditions and Division 01 Specification Sections, apply to this Section.

1.2 SUMMARY

A. Section includes packaged, large-capacity, rooftop air conditioning units (RTUs) with the following components and accessories:
1. Casings.
2. Fans.
3. Motors.
4. Coils.
5. Refrigerant circuit components.
6. Air filtration.
7. Dampers.
8. Electrical power connections.
9. Controls.
10. Accessories
11. Roof curbs.

1.3 DEFINITIONS

A. DDC: Direct-digital controls.

B. ECM: Electronically commutated motor.

C. Outdoor-Air Refrigerant Coil: Refrigerant coil in the outdoor-air stream to reject heat during cooling operations and to absorb heat during heating operations. "Outdoor air" is defined as the air outside the building or taken from outdoors and not previously circulated through the system.

D. RTU: Rooftop unit. As used in this Section, this abbreviation means packaged, large-capacity, rooftop air-conditioning units. This abbreviation is used regardless of whether the unit is mounted on the roof or on a concrete base on ground.

E. Supply-Air Fan: The fan providing supply air to conditioned space. "Supply air" is defined as the air entering a space from air-conditioning, heating, or ventilating apparatus.

F. Supply-Air Refrigerant Coil: Refrigerant coil in the supply-air stream to absorb heat (provide cooling) during cooling operations and to reject heat (provide heating) during heating operations.

"Supply air" is defined as the air entering a space from air-conditioning, heating, or ventilating apparatus.

1.4 ACTION SUBMITTALS

A. Submittals shall be formatted per Section 230000 “General Mechanical Requirements”. The manufacturer shall resubmit the specification section showing compliance with each respective paragraphs and specified items and features in that particular specification section. All **exceptions** shall be clearly identified by referencing respective paragraph and other requirements. Next to each specification item, indicate the following:
   1. “No Exception Taken”.
   2. “Exception”. All exceptions shall be clearly identified by referencing respective paragraph and other requirements along with proposed alternative.

B. Product Data: Include manufacturer's technical data for each RTU, including rated capacities, dimensions, required clearances, characteristics, furnished specialties, and accessories.
   1. Factory selection calculations for each antimicrobial ultraviolet lamp installation.

C. Shop Drawings:
   1. Include details of equipment assemblies. Indicate dimensions, weights, loads, required clearances, method of field assembly, components, and location and size of each field connection.
   2. Include diagrams for power, signal, and control wiring.

D. Delegated-Design Submittal: For RTU supports indicated to comply with performance requirements and design criteria, including analysis data signed and sealed by the qualified professional engineer responsible for their preparation.
   1. Design Calculations: Calculate requirements for selecting vibration isolators and seismic restraints and for designing vibration isolation bases.
   2. Detail mounting, securing, and flashing of roof curb to roof structure. Indicate coordinating requirements with roof membrane system.
   3. Seismic Restraint Details: Detail fabrication and attachment of wind and seismic restraints and snubbers. Show anchorage details and indicate quantity, diameter, and depth of penetration of anchors.

1.5 INFORMATIONAL SUBMITTALS

A. Coordination Drawings: Plans and other details, drawn to scale, on which the following items are shown and coordinated with each other, using input from installers of the items involved:
   1. Structural members to which RTUs will be attached.
   2. Required roof penetrations for ducts, pipes, and electrical raceways, including size and location of each penetration.
   3. Roof curbs and flashing.
   4. Roof curb mounting details.

B. Seismic Qualification Data: Certificates, for RTUs, accessories, and components, from manufacturer.

1. Basis for Certification: Indicate whether withstand certification is based on actual test of assembled components or on calculation.
2. Dimensioned Outline Drawings of Equipment Unit: Identify center of gravity and locate and describe mounting and anchorage provisions.
3. Detailed description of equipment anchorage devices on which the certification is based and their installation requirements.
4. Restraint of internal components, including fans, coils, and refrigeration components.

C. Field quality-control reports.

D. Startup service report.

E. Sample Warranty: For special warranty.

1.6 CLOSEOUT SUBMITTALS

A. Operation and Maintenance Data: For RTUs to include in emergency, operation, and maintenance manuals.

1.7 MAINTENANCE MATERIAL SUBMITTALS

A. Furnish extra materials described below that match products installed and that are packaged with protective covering for storage and identified with labels describing contents.
1. Fan Belts: One set for each belt-driven fan.
2. Filters: One set of filters for each unit.

1.8 WARRANTY

A. Special Warranty: Manufacturer agrees to repair or replace components of RTUs that fail in materials or workmanship within specified warranty period.
1. Warranty Period for Compressors: Manufacturer's standard, but not less than **five** years from date of Substantial Completion.
2. Warranty Period for Solid-State Ignition Modules: Manufacturer's standard, but not less than **three** years from date of Substantial Completion.
3. Warranty Period for Control Boards: Manufacturer's standard, but not less than **three** years from date of Substantial Completion.
4. Warranty Period for Antimicrobial Ultraviolet Lamp System: Lifetime with exception of lamps.
5. Warranty Period for Economizer Dampers and Assembly: Not less than **five** years from date of Substantial Completion.

PART 2 - PRODUCTS

2.1 SYSTEM DESCRIPTION

A. AHRI Compliance:
1. Comply with AHRI 340/360 for testing and rating energy efficiencies for RTUs.
2. Comply with AHRI 270 for testing and rating sound performance for RTUs.
3. Comply with AHRI 1060 for testing and rating performance for air-to-air exchanger.
4. Comply with AHRI 210/240 for testing and rating energy efficiencies for RTUs.

B. AMCA Compliance:
1. Comply with AMCA 11 and bear the AMCA-Certified Ratings Seal for air and sound performance according to AMCA 211 and AMCA 311.
2. Damper leakage tested in accordance with AMCA 500-D.
3. Operating Limits: Classify according to AMCA 99.

C. ASHRAE Compliance:
1. Comply with ASHRAE 15 for refrigeration system safety.
2. Comply with ASHRAE 33 for methods of testing cooling and heating coils.
3. Comply with applicable requirements in ASHRAE 62.1, Section 5 - "Systems and Equipment" and Section 7 - "Construction and Startup."

D. ASHRAE/IES 90.1 Compliance: Applicable requirements in ASHRAE/IES 90.1, Section 6 - "Heating, Ventilating, and Air-Conditioning."

E. NFPA Compliance: Comply with NFPA 90A or NFPA 90B.

F. UL Compliance: Comply with UL 1995.

G. Electrical Components, Devices, and Accessories: Listed and labeled as defined in NFPA 70, by a qualified testing agency, and marked for intended location and application.

2.2 MANUFACTURERS

A. Manufacturers: Subject to compliance with the requirements, provide products by one of the following:
1. Trane
2. Carrier
3. York
4. Or Approved Equal

2.3 PERFORMANCE REQUIREMENTS

A. Delegated Design: Engage a qualified professional engineer, as defined in Section 014000 "Quality Requirements," to design mounting and restraints for RTUs, including comprehensive engineering analysis.
1. Design RTU supports to comply with seismic performance requirements.

B. Seismic Performance: RTUs shall withstand the effects of earthquake motions determined according to ASCE 7.
   1. The term "withstand" means "the unit will remain in place without separation of any parts when subjected to the seismic forces specified"

2.4 CASINGS

A. Cabinet: Galvanized steel, phosphatized, and finished with paint coating certified at 1000 hours in salt spray test in compliance with ASTM B117.

B. Cabinet top cover shall be one piece construction or where seams exits, it shall be double-hemmed and gasket-sealed.

C. Access Panels: Water- and air-tight panels with handles shall provide access to filters, heating section, return air fan section, supply air fan section, evaporator coil section, and unit control section.

D. Units base pan shall have a raised 1 1/8 inch high lip around the supply and return openings for water integrity.

E. Insulation: Provide 1/2 inch thick fiberglass insulation with foil face on all exterior panels in contact with the return and conditioned air stream. All edges must be captured so that there is no insulation exposed in the air stream.

F. Provide openings either on side of unit or through the base for power, control, condensate

G. Condensate Drain Pans: Fabricated using non-corrosive material 0.028-inch thick, a minimum of 2 inches deep, and complying with ASHRAE 62.1 for design and construction of drain pans.
   1. Double-Wall Construction: Fill space between walls with foam insulation and seal moisture tight.
   2. Drain Connections: Threaded nipple.

H. The base of the units shall have rigging/lifting holes for crane maneuvering.

I. Interior Casing: G-90-coated galvanized steel, 0.034 inch thick, perforated 40 percent free area.

J. Airstream Surfaces: Surfaces in contact with the airstream shall comply with requirements in ASHRAE 62.1.

2.5 FANS

A. Supply-Air Fans: Aluminum or painted-steel wheels, and galvanized- or painted-steel fan scrolls.
   1. Direct-Driven Supply-Air Fans: Motor shall be resiliently mounted in the fan inlet.
   2. Where direct-drive fans are not available by manufacturer, belt-driven fans shall be used. For belt-driven fans motors shall be installed on an adjustable fan base resiliently mounted in the casing.

B. Condenser-Coil Fan: Variable-speed propeller, mounted on shaft of permanently lubricated multispeed] motors.

C. Relief-air Fan: Propeller shaft mounted on permanently lubricated motor.

D. For units with modulating power exhaust fan shall be centrifugal type.

E. Seismic Fabrication Requirements: Fabricate fan section, internal mounting frame and attachment to fans, fan housings, motors, casings, accessories, and other fan section components with reinforcement strong enough to withstand seismic forces defined in Section 230548 "Vibration and Seismic Controls for HVAC" when fan-mounted frame and RTU-mounted frame are anchored to building structure.

2.6 MOTORS

A. Comply with Section 230513 "Common Motor Requirements for HVAC Equipment" and the requirements of this Article.

B. Motor Sizes: Minimum size as indicated. If not indicated, large enough so driven load will not require motor to operate in service factor range above 1.0.

2.7 COILS

A. Supply-Air Refrigerant Coil:
   1. Aluminum plate fin and seamless copper tube in steel casing with equalizing-type vertical distributor.
   2. Polymer strip shall prevent all copper coils from contacting steel coil frame or condensate pan.
   3. Coil Split: Interlaced.
   4. Condensate Drain Pan: Galvanized steel with corrosion-resistant coating, formed with pitch and drain connections complying with ASHRAE 62.

B. Outdoor-Air Refrigerant Coil:
   1. Aluminum-plate fin and seamless copper tube in steel casing with equalizing-type vertical distributor.
   2. Polymer strip shall prevent all copper coils from contacting steel coil frame or condensate pan.

2.8 REFRIGERANT CIRCUIT COMPONENTS

A. Compressor: Hermetic, 2-stage scroll compressor, mounted on vibration isolators; with internal overcurrent and high-temperature protection, internal pressure relief.

B. Refrigeration Specialties:
   1. Refrigerant: R-410A
   2. Expansioni valve with replaceable thermostatic element.
   3. Refrigeratn filter/dryer.

4. Manual-reset high-pressure safety switch.
5. Automatic-reset low-pressure safety switch.
6. Minimum off-time relay.
7. Automatic-reset compressor motor thermal overload.
8. Brass service valves installed in compressor suction and liquid lines.
9. Low-ambient kit high-pressure sensor.
10. Four-way reversing valve with a replaceable magnetic coil, thermostatic expansion valves with bypass check valves, and a suction line accumulator.

2.9 AIR FILTRATION

A. General: Each filter section shall be designed and constructed to house specific type of filter indicated on equipment schedule. Provide filters of type indicated on schedule. A hinged access door shall be provided on side of section. Internal blank-offs shall be provided to prevent air bypass around filters.
   1. Filters shall be standard, commercially available sies.

B. Filter tracks in flat or cartridge filter sections: Filter tracks in flat or cartridge filter sections shall be upstream loaded Type 8 constructed from galvanized steel to ensure rigidity and tight tolerances. Tracks must be field adjustable without tools and designed to accept standard-size filters with one inch, 2-inch, or 4-inch widths.

C. Filter tracks in angle filter sections: Filter tracks in angle filter sections shall be constructed from galvanized steel to ensure rigidity and tight tolerances. Angle filter sections shall be designed to hold 2-inch filters of standard sizes, arranged in horizontal V-formation.

D. Bag or cartridge filter sections: Bag or cartridge filter sections shall be capable of accepting standard size 12-inch deep rigid media or bag filters. When bag/cartridge filters are installed in a positive pressure application, section shall be furnished with upstream service filter access and doors shall open inward against pressure for safety and leak integrity. For filters with lengths longer than 12 inches, additional plenum sections shall be furnished. Filter sizes shall be 24 by 24-inch or 12 by 24-inch only.

2.10 ANTIMICROBIAL ULTRAVIOLET LAMP SYSTEM

2.11 DAMPERS

A. Outdoor- and Return-Air Mixing Dampers: Parallel blade galvanized-steel dampers mechanically fastened to cadmium plated or galvanized-steel operating rod in reinforced cabinet.
   1. Leakage Rate: Damper leakage shall not exceed 7 CFM/ft2 at 1.0” of static pressure when tested in accordance with AMCA standard 500.
   2. Damper Reliability Testing: Comply with current version California Title 24, Part 6
   3. Damper Motor: Modulating with adjustable minimum position.

B. Relief-Air Damper: Gravity actuated or motorized.

2.12 ELECTRICAL POWER CONNECTIONS

A. RTU shall have a single connection of power to unit with unit-mounted disconnect switch accessible from outside unit and control-circuit transformer with built-in overcurrent protection.

B. For units with power exhaust that require separate power connection contractor shall provide disconnect switch and field mount near power exhaust.

2.13 CONTROLS

A. Control of equipment and sequence of operation are specified in Section 230923 "Direct Digital Control (DDC) System for HVAC" and Section 230993 "Sequence of Operation for HVAC Controls.

B. Thermostat
   1. Control Voltage Transformer
   2. Wall-mounted thermostat or sensor with the following features:
      a. Heat-cool-off switch.
      b. Fan on-auto switch.
      c. Fan-speed switch.
      d. Automatic changeover.
      e. Adjustable deadband.
      f. Exposed set point.
      g. Exposed indication.
      h. Degree F indication.
      i. Unoccupied-period-override push button with maximum 4-hour override.
      j. Data entry and access port to input temperature set points, occupied and unoccupied periods, and output room temperature, supply-air temperature, operating mode, and status.
      k. Occupied and unoccupied periods on seven day clock with a minimum of four programmable periods within 24 hours.

C. Integral controller
   1. Unit shall be complete with low-voltage control circuit protected by a resettable circuit breaker on the 24-volt transformer side.
   2. Unit shall incorporate a lockout circuit which provides reset capability at the space thermostat or base unit should any of the following standard safety devices trip and shut off compressor:
      a. Loss-of-charge/Low-pressure switch.
      b. High-pressure switch.
      c. Freeze-protection thermostat, evaporator coil. If any of the above safety devices trip, an LED (light-emitting diode) indicator shall flash a diagnostic code that indicates which safety switch has tripped.
   3. Unit shall incorporate "AUTO RESET" compressor over temperature, over current protection.
   4. Unit shall operate with conventional thermostat designs and have a low voltage terminal strip for easy hook-up.
   5. Unit control board shall have on-board diagnostics and fault code display.

6. Standard controls shall include anti-short cycle and low voltage protection, and permit cooling operation down to 0 ºF.
7. Control board shall monitor each refrigerant safety switch independently.
8. Control board shall retain last 5 fault codes in non-volatile memory, which will not be lost in the event of a power loss.

D. Interface Requirements for HVAC Instrumentation and Control System:
1. Interface relay for scheduled operation.
2. Interface relay to provide indication of fault at the central workstation and diagnostic code storage.
3. Provide BACNET compatible interface for central HVAC control workstation for setpoint adjustment and system monitoring.

E. Fault Detection: Provide Fault Detection and Diagnostics (FDD) system in accordance with Title 24.

2.14 ACCESSORIES

A. Filter differential pressure switch with sensor tubing on either side of filter. Set for final filter pressure loss.

B. Remote potentiometer to adjust minimum economizer damper position.

C. Return-air bypass damper.

D. Factory- or field-installed demand-controlled ventilation.

E. Safeties:
1. Smoke detector. Shall be capable of interfacing with fire-alarm control panel.
2. Condensate overflow switch.
3. Phase-loss protection.
4. High pressure control.
5. Gas furnace airflow-proving switch.

F. Concentric diffuser with white louvers and polished aluminum return grilles, insulated diffuser box with mounting flanges, and interior transition.

G. Door switches to disable heating or reset set point when open.

H. Outdoor air intake weather hood.

I. Duplex, 115-V, ground-fault-interrupter outlet with 15-A overcurrent protection. Include transformer if required

2.15 ROOF CURBS

A. Roof curbs with vibration isolators and wind or seismic restraints are specified in Section 230548 "Vibration and Seismic Controls for HVAC."

B. Materials: Galvanized steel with corrosion-protection coating, watertight gaskets, and factory-installed wood nailer; complying with NRCA standards.
   1. Curb Insulation and Adhesive: Comply with NFPA 90A or NFPA 90B.
      a. Materials: ASTM C 1071, Type I or II.
      b. Thickness:1 inch
   2. Application: Factory applied with adhesive and mechanical fasteners to the internal surface of curb.
      a. Liner Adhesive: Comply with ASTM C 916, Type I.
      b. Mechanical Fasteners: Galvanized steel, suitable for adhesive attachment, mechanical attachment, or welding attachment to duct without damaging liner when applied as recommended by manufacturer and without causing leakage in cabinet.
      c. Liner materials applied in this location shall have air-stream surface coated with a temperature-resistant coating or faced with a plain or coated fibrous mat or fabric depending on service air velocity.
      d. Liner Adhesive: Comply with ASTM C 916, Type I.

PART 3 - EXECUTION

3.1 EXAMINATION

A. Examine substrates, areas, and conditions, with Installer present, for compliance with requirements for installation tolerances and other conditions affecting performance of RTUs.

B. Examine roughing-in for RTUs to verify actual locations of piping and duct connections before equipment installation.

C. Examine roofs for suitable conditions where RTUs will be installed.

D. Proceed with installation only after unsatisfactory conditions have been corrected.

3.2 INSTALLATION

A. Roof Curb: Install on roof structure or concrete base, level and secure, according to NRCA's "NRCA Roofing Manual: Membrane Roof Systems. Install RTUs on curbs and coordinate roof penetrations and flashing with roof construction specified in Section 077200 "Roof Accessories." Secure RTUs to upper curb rail, and secure curb base to roof framing or concrete base with anchor bolts.

B. Equipment Mounting:
   1. Comply with requirements for vibration isolation and seismic control devices specified in Section 230548 "Vibration and Seismic Controls for HVAC."

3.3 CONNECTIONS

A. Install condensate drain, minimum connection size, with trap and indirect connection to nearest roof drain or area drain.

B. Duct installation requirements are specified in other HVAC Sections. Drawings indicate the general arrangement of ducts. The following are specific connection requirements:
   1. Install ducts to termination at top of roof curb.
   2. Remove roof decking only as required for passage of ducts. Do not cut out decking under entire roof curb.
   3. Connect supply ducts to RTUs with flexible duct connectors specified in Section 233300 "Air Duct Accessories."
   4. Install return-air duct continuously through roof structure.

C. Connect electrical wiring according to Section 260519 "Low-Voltage Electrical Power Conductors and Cables."

D. Ground equipment according to Section 260526 "Grounding and Bonding for Electrical Systems."

E. Install nameplate for each electrical connection, indicating electrical equipment designation and circuit number feeding connection.
   1. Nameplate shall be laminated acrylic or melamine plastic signs as specified in Section 260553 "Identification for Electrical Systems."
   2. Locate nameplate where easily visible.

3.4 FIELD QUALITY CONTROL

A. Manufacturer's Field Service: Engage a factory-authorized service representative to test and inspect components, assemblies, and equipment installations, including connections.

B. RTU will be considered defective if it does not pass tests and inspections.

C. Prepare test and inspection reports.

3.5 STARTUP SERVICE

A. Engage a factory-authorized service representative to perform startup service.

B. Complete installation and startup checks according to manufacturer's written instructions.
   1. Inspect for visible damage to unit casing.
   2. Inspect for visible damage to furnace combustion chamber.
   3. Inspect for visible damage to compressor, coils, and fans.
   4. Inspect internal insulation.
   5. Verify that labels are clearly visible.
   6. Verify that clearances have been provided for servicing.
   7. Verify that controls are connected and operable.
   8. Verify that filters are installed.
   9. Clean condenser coil and inspect for construction debris.
   10. Clean furnace flue and inspect for construction debris.
   11. Remove packing from vibration isolators.
   12. Inspect operation of barometric relief dampers.
   13. Verify lubrication on fan and motor bearings.

14. Inspect fan-wheel rotation for movement in correct direction without vibration and binding.
15. Adjust fan belts to proper alignment and tension.
16. Start unit according to manufacturer's written instructions.
    a. Start refrigeration system.
    b. Do not operate below recommended low-ambient temperature.
    c. Complete startup sheets and attach copy with Contractor's startup report.
17. Inspect and record performance of interlocks and protective devices; verify sequences.
18. Operate unit for an initial period as recommended or required by manufacturer.
19. Perform the following operations for both minimum and maximum firing. Adjust burner for peak efficiency.
    a. Inspect operation of power vents.
    b. Measure combustion-air temperature at inlet to combustion chamber.
    c. .
    d. Measure supply-air temperature and volume when burner is at maximum firing rate and when burner is off. Calculate useful heat to supply air.
20. Calibrate thermostats.
21. Adjust and inspect high-temperature limits.
22. Inspect outdoor-air dampers for proper stroke and interlock with return-air dampers.
23. Start refrigeration system and measure and record the following when ambient is a minimum of 15 deg F above return-air temperature:
    a. Coil leaving-air, dry- and wet-bulb temperatures.
    b. Coil entering-air, dry- and wet-bulb temperatures.
    c. Outdoor-air, dry-bulb temperature.
    d. Outdoor-air-coil, discharge-air, dry-bulb temperature.
24. Inspect controls for correct sequencing of heating, mixing dampers, refrigeration, and normal and emergency shutdown.
25. Measure and record the following minimum and maximum airflows. Plot fan volumes on fan curve.
    a. Supply-air volume.
    b. Return-air volume.
    c. Relief-air volume.
    d. Outdoor-air intake volume.
26. Simulate maximum cooling demand and inspect the following:
    a. Short circuiting of air through condenser coil or from condenser fans to outdoor-air intake.
27. Verify operation of remote panel including pilot-light operation and failure modes. Inspect the following:
    a. Low-temperature safety operation.
    b. Filter high-pressure differential alarm.
    c. Economizer to minimum outdoor-air changeover.
    d. Relief-air fan operation.
    e. Smoke and firestat alarms.
28. After startup and performance testing and prior to Substantial Completion, replace existing filters with new filters.

3.6 CLEANING AND ADJUSTING

A. Occupancy Adjustments: When requested within 12 months from date of Substantial Completion, provide on-site assistance in adjusting system to suit actual occupied conditions. Provide up to two visits to Project during other-than-normal occupancy hours for this purpose.

B. After completing system installation and testing, adjusting, and balancing RTU and air-distribution systems, clean filter housings and install new filters.

3.7 DEMONSTRATION

A. Engage a factory-authorized service representative to train Owner's maintenance personnel to adjust, operate, and maintain RTUs.

END OF SECTION 237416

SECTION 238126 - SPLIT-SYSTEM AIR-CONDITIONERS

PART 1 - GENERAL

1.1 RELATED DOCUMENTS

A. Drawings and general provisions of the Contract, including General and Supplementary Conditions and Division 01 Specification Sections, apply to this Section.

1.2 SUMMARY

A. Section includes split-system air-conditioning and heat-pump units consisting of separate evaporator-fan and compressor-condenser components.

1.3 ACTION SUBMITTALS

A. Submittals shall be formatted per Section 230000 “General Mechanical Requirements”. The manufacturer shall resubmit the specification section showing compliance with each respective paragraphs and specified items and features in that particular specification section. All **exceptions** shall be clearly identified by referencing respective paragraph and other requirements. Next to each specification item, indicate the following:
   1. “No Exception Taken”.
   2. “Exception”. All exceptions shall be clearly identified by referencing respective paragraph and other requirements along with proposed alternative.

B. Product Data: For each type of product indicated. Include rated capacities, operating characteristics, and furnished specialties and accessories. Include performance data in terms of capacities, outlet velocities, static pressures, sound power characteristics, motor requirements, and electrical characteristics.

C. Shop Drawings: Include plans, elevations, sections, details, and attachments to other work.
   1. Detail equipment assemblies and indicate dimensions, weights, loads, required clearances, method of field assembly, components, and location and size of each field connection.
   2. Wiring Diagrams: For power, signal, and control wiring.

D. Samples for Initial Selection: For units with factory-applied color finishes.

1.4 INFORMATIONAL SUBMITTALS

A. Field quality-control reports.

B. Warranty: Sample of special warranty.

1.5 CLOSEOUT SUBMITTALS

A. Operation and Maintenance Data: For split-system air-conditioning units to include in emergency, operation, and maintenance manuals.

B. Warranty

C. Start-up reports

1.6 MAINTENANCE MATERIAL SUBMITTALS

A. Furnish extra materials that match products installed and that are packaged with protective covering for storage and identified with labels describing contents.
   1. Filters: One extra set for each air-handling unit.
   2. Fan Belts: One extra set for each air-handling unit fan.

1.7 QUALITY ASSURANCE

A. Electrical Components, Devices, and Accessories: Listed and labeled as defined in NFPA 70, by a qualified testing agency, and marked for intended location and application.

B. ASHRAE Compliance:
   1. Fabricate and label refrigeration system to comply with ASHRAE 15, "Safety Standard for Refrigeration Systems."
   2. ASHRAE Compliance: Applicable requirements in ASHRAE 62.1, Section 4 - "Outdoor Air Quality," Section 5 - "Systems and Equipment," Section 6 - " Procedures," and Section 7 - "Construction and System Start-up."

C. ASHRAE/IESNA Compliance: Applicable requirements in ASHRAE/IESNA 90.1.

1.8 COORDINATION

A. Coordinate sizes and locations of concrete bases with actual equipment provided. Cast anchor-bolt inserts into bases. Concrete, reinforcement, and formwork are specified in Section 033000 "Cast-in-Place Concrete."

B. Coordinate sizes and locations of roof curbs, equipment supports, and roof penetrations with actual equipment provided.

1.9 WARRANTY

A. Special Warranty: Manufacturer's standard form in which manufacturer agrees to repair or replace components of split-system air-conditioning units that fail in materials or workmanship within specified warranty period.
   1. Warranty Period:
      a. For Compressor: Five year(s) from date of Substantial Completion.

b. For Parts: One year(s) from date of Substantial Completion.
c. For Labor: One year(s) from date of Substantial Completion.

PART 2 - PRODUCTS

2.1 MANUFACTURERS

A. Manufacturers: Subject to compliance with requirements, provide products by one of the following:
1. Trane
2. Carrier
3. Daikin
4. Mitsubishi

2.2 INDOOR UNITS

A. Concealed Evaporator-Fan Components:
1. Chassis: Galvanized steel with flanged edges, removable panels for servicing, and insulation on back of panel.
2. Insulation: Faced, glass-fiber duct liner.
3. Refrigerant Coil: Copper tube, with mechanically bonded aluminum fins and thermal-expansion valve. Comply with ARI 206/110.
4. Fan: Forward-curved, double-width wheel of galvanized steel; directly connected to motor.
5. Fan Motors:
a. Comply with NEMA designation, temperature rating, service factor, enclosure type, and efficiency requirements specified in Section 230513 "Common Motor Requirements for HVAC Equipment."
b. ECM, or multispeed with internal thermal protection and permanent lubrication.
c. Wiring Terminations: Connect motor to chassis wiring with plug connection.
6. Airstream Surfaces: Surfaces in contact with the airstream shall comply with requirements in ASHRAE 62.1.
7. Condensate Drain Pans:
a. Fabricated with one percent slope in at least two planes to collect condensate from cooling coils (including coil piping connections, coil headers, and return bends) and humidifiers, and to direct water toward drain connection.
1) Length: Extend drain pan downstream from leaving face to comply with ASHRAE 62.1.
2) Depth: A minimum of 2 inches deep.
b. Single-wall, stainless-steel sheet.
c. Drain Connection: Located at lowest point of pan and sized to prevent overflow. Terminate with threaded nipple on one end of pan.
1) Minimum Connection Size: NPS 3/4

B. Floor-Mounted, Evaporator-Fan Components:
1. Cabinet: Enameled steel with removable panels on front and ends in color selected by Architect.
a. Discharge Grille: Steel with surface-mounted frame.

b. Insulation: Faced, glass-fiber duct liner.
c. Drain Pans: Galvanized steel, with connection for drain; insulated.

2. Refrigerant Coil: Copper tube, with mechanically bonded aluminum fins and thermal-expansion valve. Comply with ARI 206/110.
3. Fan: Direct drive, centrifugal
4. Fan Motors:
   a. Comply with NEMA designation, temperature rating, service factor, enclosure type, and efficiency requirements specified in Section 230513 "Common Motor Requirements for HVAC Equipment."
   b. Multitapped, multispeed with internal thermal protection and permanent lubrication.
5. Air Filtration Section:
   a. General Requirements for Air Filtration Section:
      1) Comply with NFPA 90A.
      2) Minimum Arrestance: According to ASHRAE 52.1 and MERV according to ASHRAE 52.2.
      3) Filter-Holding Frames: Arranged for flat or angular orientation, with access doors on both sides of unit. Filters shall be removable from one side or lifted out from access plenum.
   b. Disposable Panel Filters:
      1) Factory-fabricated, viscous-coated, flat-panel type.
      2) Thickness: 2 inches. (
      3) Arrestance according to ASHRAE 52.1: 80
      4) MERV according to ASHRAE 52.2: 13
      5) Media: Interlaced glass fibers sprayed with nonflammable adhesive and antimicrobial agent.

C. Wall-Mounted, Evaporator-Fan Components:
1. Cabinet: Enameled steel with removable panels on front and ends in color selected by Architect, and discharge drain pans with drain connection.
2. Refrigerant Coil: Copper tube, with mechanically bonded aluminum fins and thermal-expansion valve. Comply with ARI 206/110.
3. Fan: Direct drive, centrifugal.
4. Fan Motors:
   a. Comply with NEMA designation, temperature rating, service factor, enclosure type, and efficiency requirements specified in Section 230513 "Common Motor Requirements for HVAC Equipment."
   b. ECM or Multitapped, multispeed with internal thermal protection and permanent lubrication.
   c. Enclosure Type: Totally enclosed, fan cooled.
   d. NEMA Premium (TM) efficient motors as defined in NEMA MG 1.
   e. Controllers, Electrical Devices, and Wiring: Comply with requirements for electrical devices and connections specified in electrical Sections.
   f. Mount unit-mounted disconnect switches on exterior of unit.
5. Airstream Surfaces: Surfaces in contact with the airstream shall comply with requirements in ASHRAE 62.1.
6. Condensate Drain Pans:
   a. Fabricated with one percent slope in at least two planes to collect condensate from cooling coils (including coil piping connections, coil headers, and return bends) and humidifiers, and to direct water toward drain connection.

1) Length: Extend drain pan downstream from leaving face to comply with ASHRAE 62.1.
2) Depth: A minimum of 1 inch deep.

b. Single-wall, stainless-steel sheet.

c. Drain Connection: Located at lowest point of pan and sized to prevent overflow. Terminate with threaded nipple on one end of pan.

1) Minimum Connection Size: NPS 3/4

7. Air Filtration Section:

a. General Requirements for Air Filtration Section:

1) Comply with NFPA 90A.
2) Minimum Arrestance: According to ASHRAE 52.1 and MERV according to ASHRAE 52.2.
3) Filter-Holding Frames: Arranged for flat or angular orientation, with access doors on both sides of unit. Filters shall be removable from one side or lifted out from access plenum.

b. Disposable Panel Filters:

1) Factory-fabricated, viscous-coated, flat-panel type.
2) Thickness: 2 inches.
3) Arrestance according to ASHRAE 52.1: 80
4) MERV according to ASHRAE 52.2: 13
5) Media: Interlaced glass fibers sprayed with nonflammable adhesive and antimicrobial agent.

2.3 OUTDOOR UNITS

A. Air-Cooled, Compressor-Condenser Components:

1. Casing: Steel, finished with baked enamel, with removable panels for access to controls, weep holes for water drainage, and mounting holes in base. Provide brass service valves, fittings, and gage ports on exterior of casing.
2. Compressor: Hermetically sealed with crankcase heater and mounted on vibration isolation device. Compressor motor shall have thermal- and current-sensitive overload devices, start capacitor, relay, and contactor.

a. Compressor Type: Scroll.

b. Two-speed compressor motor with manual-reset high-pressure switch and automatic-reset low-pressure switch.

c. Refrigerant Charge: R-410A

d. Refrigerant Coil: Copper tube, with mechanically bonded aluminum fins and liquid subcooler. Comply with ARI 206/110.

3. Heat-Pump Components: Reversing valve and low-temperature-air cutoff thermostat.
4. Fan: Aluminum-propeller type, directly connected to motor.
5. Motor: Permanently lubricated, with integral thermal-overload protection.
6. Low Ambient Kit: Permits operation down to 45 deg F.
7. Mounting Base: Polyethylene.

2.4 ACCESSORIES

A. Control equipment and sequence of operation are specified in Section 230923 "Direct Digital Control (DDC) System for HVAC" and Section 230993.11 "Sequence of Operations for HVAC DDC."

B. Thermostat: Low voltage with subbase to control compressor and evaporator fan. Thermostat: (Wireless infrared functioning) to remotely control compressor and evaporator fan, with the following features:
   1. Compressor time delay.
   2. 24-hour time control of system stop and start.
   3. Liquid-crystal display indicating temperature, set-point temperature, time setting, operating mode, and fan speed.
   4. Fan-speed selection including auto setting.

D. Automatic-reset timer to prevent rapid cycling of compressor.

E. Refrigerant Line Kits: Type ACR, Soft-annealed copper suction and liquid lines factory cleaned, dried, pressurized, and sealed; factory-insulated suction line with flared fittings at both ends.

F. Drain Hose: For condensate.

G. Additional Monitoring:
   1. Monitor constant and variable motor loads.
   2. Monitor variable-frequency-drive operation.
   3. Monitor economizer cycle.
   4. Monitor cooling load.
   5. Monitor air distribution static pressure and ventilation air volumes.

PART 3 - EXECUTION

3.1 INSTALLATION

A. Install units level and plumb.

B. Install evaporator-fan components using manufacturer's standard mounting devices securely fastened to building structure as detailed on the drawings.

C. Install roof-mounted, compressor-condenser components on equipment supports as detailed on the drawings.

D. Equipment Mounting:
   1. Install ground-mounted, compressor-condenser components on cast-in-place concrete equipment base(s). Comply with requirements for equipment bases and foundations specified as required.
   2. Install ground-mounted, compressor-condenser components on polyethylene mounting base.

3. Comply with requirements for vibration isolation and seismic control devices specified in Section 230548 "Vibration and Seismic Controls for HVAC."
4. Comply with requirements for vibration isolation devices specified in Section 230548.13 "Vibration Controls for HVAC."

E. Install and connect (pre-charged) refrigerant tubing to component's quick-connect fittings. Install tubing to allow access to unit.

3.2 CONNECTIONS

A. Piping installation requirements are specified in other Sections. Drawings indicate general arrangement of piping, fittings, and specialties.

B. Where piping is installed adjacent to unit, allow space for service and maintenance of unit.

C. Duct Connections: Duct installation requirements are specified in Section 233113 "Metal Ducts." Drawings indicate the general arrangement of ducts. Connect supply and return ducts to split-system air-conditioning units with flexible duct connectors. Flexible duct connectors are specified in Section 233300 "Air Duct Accessories."

3.3 FIELD QUALITY CONTROL

A. Manufacturer's Field Service: Engage a factory-authorized service representative to inspect, test, and adjust components, assemblies, and equipment installations, including connections.

B. Perform tests and inspections.
1. Manufacturer's Field Service: Engage a factory-authorized service representative to inspect components, assemblies, and equipment installations, including connections, and to assist in testing.

C. Tests and Inspections:
1. Leak Test: After installation, charge system and test for leaks. Repair leaks and retest until no leaks exist.
2. Operational Test: After electrical circuitry has been energized, start units to confirm proper motor rotation and unit operation.
3. Test and adjust controls and safeties. Replace damaged and malfunctioning controls and equipment.

D. Remove and replace malfunctioning units and retest as specified above.

E. Prepare test and inspection reports.

3.4 STARTUP SERVICE Perform startup service.

1. Complete installation and startup checks according to manufacturer's written instructions.

3.5 DEMONSTRATION

A. Train Owner's maintenance personnel to adjust, operate, and maintain units.

END OF SECTION 238126

SECTION 260000 – GENERAL ELECTRICAL REQUIREMENTS

PART 1 - GENERAL

1.1 RELATED DOCUMENTS

A. Drawings and general provisions of the Contract, including General and Supplementary Conditions and Division 01 Specification Sections, apply to this Section.

1.2 SCOPE

A. Basic electrical requirements specifically applicable to Division 26 Sections.

B. Work includes but is not necessarily limited to the following:
   1. Labor, materials, services, equipment, and appliances required for completion of tasks as indicated on drawing or in specification or as inherently necessary to provide complete and operational electrical systems including:
      a. All temporary construction power including test power, temporary heat and lighting;
      b. Incidental items not indicated on the drawings nor mentioned in the Specifications that belong to the work described, or are required to provide complete and operable systems, as though called out here in every detail;
      c. Cleaning, cutting, patching, repairing and painting;
      d. Testing and commissioning;
      e. The Contractor shall coordinate this Section with all other Sections of the Specification.

1.3 DRAWINGS AND SPECIFICATIONS

A. Drawings accompanying these Specifications show intent of Work to be done. Specifications shall identify quality and grade of installation and where equipment and hardware is not particularly specified, Contractor shall provide submittals for all products and install them per manufacturers' recommendations, and in a workmanlike manner.

B. Examine Drawings and Specifications for elements in connection with this Work; determine existing and new general construction conditions and be familiar with all limitations caused by such conditions.

C. In the event of a conflict or inconsistency between items indicated on the plans and/or specifications or with code requirements, the note, specification or code which prescribes and establishes the more complete job or the higher standard prevail.

D. Plans are intended to show general arrangement and extent of Work contemplated. Exact location and arrangement of parts shall be determined after the Owner has reviewed equipment, as Work progresses, to conform in best possible manner with surroundings, and as directed by the Owner's Representative.

E. For purposes of clearness and legibility, the electrical drawings are essentially diagrammatic. The size and location of equipment is shown to scale where possible. The contractor shall verify all conditions, data information as indicated on the drawings and in the specification sections where electrical work interfaces with other trades.

F. Contract Documents are intended to show the scope and general arrangement of the Work under this Contract. Drawings are not intended to be scaled for roughing in measurements or to serve as shop drawings. Where job conditions require minor changes or adjustments in the indicated locations or arrangement of the Work, such changes shall be made without change in the Contract amount.

G. The contractor shall maintain as built drawings to reflect all changes made during construction and any deviations from the electrical drawings. This includes deviations from circuit numbers and any addition, deletion or relocation of fixtures/outlets shown on working drawings.

1.4 UTILITIES

A. Location and sizes of electrical, mechanical and plumbing service facilities are shown in accordance with data secured from existing record drawings and site observations. Data shown are offered as an estimating guide without guarantee of accuracy. Check and verify all data given, and verify exact location of all utility services pertaining to Work prior to excavation or performing Work.

1.5 APPLICABLE REFERENCE STANDARDS, CODES AND REGULATIONS

A. Meet requirements of all state codes having jurisdiction.

B. State of California Code of Regulations:
   1. Title 8, Chapter 4. Division of Industrial Safety, Subchapter 5. Electrical Safety Orders (Cal/OSHA):
      a. Low-Voltage Electrical Safety Orders (Sections 2299 - 2599)
      b. High-Voltage Electrical Safety Orders (Sections 2700 - 2989)
   2. Title 19, State Fire Marshal Regulations
   3. Current California Building Code (CBC), Title 24, Part 2
   4. Current California Electrical Code, Title 24, Part 3
   5. Current California Mechanical Code, Title 24, Part 4
   6. Current California Plumbing Code, Title 24, Part 5
   7. Current California Energy Code, Title 24, Part 6
   8. Current California Fire Code, Title 24, Part 9
   9. Current California Standards Code, Title 24, Part 12

C. Additional Referenced Standards:
   1. ANSI American National Standards Institute
   2. IEEE Institute of Electrical and Electronic Engineers
   3. NEMA National Electrical Manufacturer's Association
   4. NFPA National Fire Protection Association Standards
   5. UL Underwriters Laboratories

D. Codes and ordinances having jurisdiction over Work are minimum requirements; but, if Contract Documents indicate requirements, which are in excess of those minimum requirements, then requirements of the Contract Documents shall be followed. Nothing in these drawings and specifications shall be construed to permit work not conforming to governing codes or regulations. Should there be any conflicts between Contract Documents or codes or any ordinances having jurisdiction, report these to the Owner's Representative.

E. Obtain permits, and request inspections from authority having jurisdiction.

1.6 PROJECT AND SITE CONDITIONS

A. The arrangement of and connection to equipment shown on the Drawings is based upon information available and is not intended to show exact dimensions peculiar to a specific manufacturer. The Drawings are, in part, diagrammatic and some features of the illustrated equipment installations may require revision to meet actual equipment installation requirements. Structural supports, housekeeping pads, piping connections and adjacent equipment may have to be altered to accommodate the equipment provided. No additional payment will be made for such revisions or alterations.

B. Examine all Drawings and Specifications to be fully cognizant of all work required under this Division.

C. Examine site related work and surfaces before starting work of any Section.

D. Install Work in locations shown on approved Drawings, unless prevented by Project conditions.

E. Prepare drawings showing proposed rearrangement of Work to meet Project conditions, including changes to Work specified in other Sections. Obtain permission from the Owner's Representative before proceeding.

1.7 COOPERATION WITH WORK UNDER OTHER DIVISIONS

A. Cooperate with other trades to facilitate general progress of Work. Allow all other trades every reasonable opportunity for installation of their work.

B. Work under this Division shall follow general building construction closely. Set pipe sleeves and inserts and verify that openings for chases and pipes are provided.

C. Work with other trades in determining exact location of outlets, conduits, pipes, and pieces of equipment to avoid interference with lines required to maintain proper installation of Work.

D. Make such progress in the Work to not delay work of other trades.

1.8 DISCREPANCIES

A. The contractor shall check all drawings furnished to him immediately upon their receipt and shall promptly notify the owner of any discrepancies. Figures marked on drawings shall in general be

followed in preference to scale measurements. Large scale drawings in general govern small scale drawings. The contractor shall compare all drawings and verify the figures before laying out the work and will be responsible for any errors which might have been avoided thereby. Where no figures or notations are given, the plans shall be followed

B. Omissions from the Drawings or Specifications or the erroneous description of details of work which are manifestly necessary to carry out the intent of the Drawings and Specifications, or which are customarily performed, shall not relieve the Contractor from performing such omitted or erroneously described details of the work but they shall be performed as if fully and correctly set forth and described in the drawings and specifications.

C. If any part of the Specifications or Drawings appears unclear or contradictory, apply to Owner's Representative for interpretation and decision as early as possible, including during bidding period. Do not proceed with such work without Owner Representatives decision. Beginning work of any Section constitutes acceptance of conditions.

1.9 CHANGES

A. The Contractor shall be responsible to make and obtain approval from the Owner's Representative for all necessary adjustments in piping and equipment layouts as required to accommodate the relocations of equipment and/or devices, which are affected by any approved authorized changes or Product substitutions. All changes shall be clearly indicated on the "Record" drawings.

1.10 SUBMITTALS

A. Refer to Division 01 for additional requirements.

B. The manufacturer, contractor or supplier shall include a written statement that the submitted equipment, hardware or accessory complies with the requirement of that particular specification section.

C. The manufacturer shall resubmit the specification section showing compliance with each respective paragraphs and specified items and features in that particular specification section.

D. All exceptions shall be clearly identified by referencing respective paragraph and other requirements along with proposed alternative.

E. Note that prior to acceptance of submittals for review, a submittal schedule shall be submitted to the Owner's Representative.

F. Submit all Division 26 shop drawings and product data grouped and referenced by the specification technical section number in one complete submittal package.

G. Shop Drawings:
   1. Include installation details of equipment indicating proposed location, layout and arrangement, accessories, piping, and other items that must be shown to assure a coordinated installation.

2. Indicate adequate clearance for operation, maintenance, and replacement of operating equipment devices.
3. If equipment is rejected, revise drawings to show acceptable equipment and resubmit.
4. Whenever more than one (1) manufacturer's product is specified, the first named product is the basis of design used in the Drawings and the use of alternate-named manufacturer's products or substitutes may require modifications to the design.
5. The Contractor shall be responsible for all equipment ordered and/or installed prior to receipt of shop drawings returned from the Owner's Representative bearing the Owner's Representative stamp of "Reviewed". All corrections or modifications to the equipment as noted on the shop drawings shall be performed and equipment removed from the job site at the request of the Owner's Representative without additional compensation.
6. Manufacturer's Data: For each manufactured item, provide current manufacturer's descriptive literature of cataloged products, certified equipment drawings, diagrams, performance and characteristic curves if applicable, and catalog cuts.
7. Standard Compliance: When materials or equipment provided by the Contractor must conform to the standards of organizations such as American National Standards Institute (ANSI) or UL, submit proof of such conformance to the Owner Representative for approval. If an organization uses a label or listing to indicate compliance with a particular standard, the label or listing will be acceptable evidence, unless otherwise specified. In lieu of the label or listing, submit a certificate from an independent testing organization, which is competent to perform acceptance testing and is approved by the Owner Representative. The certificate shall state that the item has been tested in accordance with the specified organization's test methods and that the item conforms to the specified organization's standard.
8. Certified Test Reports: Before delivery of materials and equipment, certified copies of all test reports specified in individual sections shall be submitted for approval.
9. Certificates of Compliance or Conformance: Submit manufacturer's certifications as required on products, materials, finish, and equipment indicated in the technical sections. Certifications shall be documents prepared specifically for this Contract. Pre-printed certifications and copies of previously submitted documents will not be acceptable. The manufacturer's certifications shall name the appropriate products, equipment, or materials and the publication specified as controlling the quality of that item. Certification shall not contain statements to imply that the item does not meet requirements specified, such as "as good as"; or "achieve the same end use and results as materials formulated in accordance with the referenced publications"; or "equal or exceed the service and performance of the specified material." Certifications shall simply state that the item conforms to the requirements specified. Certificates shall be printed on the manufacturer's letterhead and shall be signed by the manufacturer's official authorized to sign certificates of compliance or conformance.

H. The Contractor shall submit all passcodes and passwords for any hardware and software required for the operations and troubleshooting in all systems and components no less than fourteen (14) calendar days prior to Final Completion.

1.11 PROJECT RECORD DOCUMENTS

A. Refer to Division 01 for additional requirements.

1. All changes, deviations and information recorded on the “Project Record Drawings” set during Construction shall be redrafted using the latest version of AutoCAD or Revit, where applicable.
2. Submit completed shop drawings to the Owner prior to completion in digital format.
3. Contractor hand-marked or drafted redlined “Project Record Drawings” will not be accepted.

1.12 PRODUCT ALTERNATIVES OR SUBSTITUTIONS

A. Refer to General Conditions and Division 01 for additional requirements.

1.13 OPERATING INSTRUCTIONS

A. Furnish approved operating instructions for systems and equipment indicated in the technical sections for use by operation and maintenance personnel.

1.14 MANUFACTURER'S RECOMMENDATIONS

A. Where installation procedures or any part thereof are required to be in accordance with manufacturer's recommendations, furnish printed copies of the recommendations prior to installation. Installation of the item shall not proceed until recommendations are received. Failure to furnish recommendations shall be cause for rejection of the equipment or material.

1.15 DELIVERY AND STORAGE

A. Refer to Division 01 for additional requirements.

B. Handle, store, and protect equipment and materials in accordance with the manufacturer's recommendations and with the requirements of NFPA 70B P, Appendix I, titled "Equipment Storage and Maintenance During Construction." Replace damaged or defective items with new items.

1.16 GUARANTEE

A. Except as may be specified under other sections in the Specifications, guarantee all equipment furnished under the Specifications for a period of one year from date of project acceptance against defective workmanship and material and improper installation. Upon notification of failure, correct deficiency immediately and without cost to the Owner.

B. Standard warranty of manufacturer shall apply for replacement of parts after expiration of the above period. Manufacturer shall furnish replacement parts to the Owner for their service agency as directed.

PART 2 - PRODUCTS

2.1 COMPETITIVE PRODUCTS

A. Unless otherwise noted, any reference in the Specification to any article, device, product, material, fixture, form, or type of construction by name, make, or catalog number shall be interpreted as establishing a standard of quality and shall not be construed as limiting competition. The Contractor may at his option propose substitutions for such material in accordance with the substitution procedure outlined in the Contract Documents.

B. Equipment specified in the following SECTIONS shall all be provided by the same manufacturer.
   1. 261200 Medium-Voltage Transformers
   2. 261300 Medium-Voltage Switchgear
   3. 262300 Low-Voltage Switchgear

2.2 MATERIALS

A. Provide all new materials and equipment, free from any defects, in first-class condition, and suitable for the space provided. Provide materials and equipment approved by UL authority having jurisdiction approved testing agency, wherever standards have been established by that agency.

B. Where two or more units of the same class of material or equipment are required, provide products of a single manufacturer. Component parts of units or equipment need not be products of the same manufacturer.

C. Unless otherwise indicated, provide materials and equipment which are the standard products of manufacturers regularly engaged in the production of such materials and equipment. Provide the manufacturers' latest standard design that conforms to these Specifications.

D. Provide materials and equipment with manufacturers' standard finish system, except where otherwise specified. Provide manufacturers' standard finish color, except where specific color is indicated. If manufacturer has no standard color, finish equipment with ANSI Number 61, light gray color.

E. Environmental and Seismic Conditions: Material and Equipment shall be designed to insure satisfactory operation and operational life in the environmental and seismic conditions which will prevail where they are being installed. Electrical equipment and enclosures shall be designed, constructed and certified to withstand external loading conditions as prescribed by the California Building Code for the locations of the equipment. Supplied equipment shall either be shake table tested and certified or comprehensive seismic calculations shall be provided. All seismic calculations and structural drawings shall bear the seal of a Structural Professional Engineer currently licensed in the State of California. Earthquake design shall be based on the equivalent lateral force analysis procedure (ASCE 7-05 Section 12.8) with the following factors:
   1. Location: 33.74765 LAT, -118.19099 LONG
      Site Class E
      S_S = 1.592 g, S_1 = 0.600 g,

S_{MS} = 1.433 g, S_{M1} = 1.440 g, S_{DS} = 0.955 g, S_{D1} = 0.960 g

2. R = 2 (Enclosure Attachment) R = 1.5 (Transformer Attachment)
3. CS = 0.51
4. SDC = D
5. V = 52 k (Enclosure and Electrical Equipment)

PART 3 - EXECUTION

3.1 GENERAL

A. Obtain and pay for all permits and inspections, including any independent testing required to verify standard compliance, and deliver certificates for same to the Owner's Representative.

3.2 WORK RESPONSIBILITIES

A. The drawings indicate diagrammatically the desired locations or arrangement of piping, equipment, etc., and are to be followed as closely as possible. Proper judgment must be exercised in executing the work to secure the best possible installation in the available space and to overcome local difficulties due to space limitations or interference with structural conditions.

B. The Contractor is responsible for the correct placing of Work and the proper location and connection of Work in relation to the work of other trades. Advise appropriate trade as to locations of access panels.

C. In the event changes in the indicated locations or arrangements are necessary, due to developed conditions in the construction or rearrangement of furnishings or equipment, such changes shall be made without extra cost, providing the change is ordered before the conduit runs, etc. and work directly connected to same is installed and no extra materials are required.

D. Where equipment is furnished by others, verify dimensions and the correct locations of this equipment before proceeding with the roughing-in of connections.

E. All scaled and figured dimensions are approximate of typical equipment of the class indicated. Before proceeding with any work, carefully check and verify all dimensions, sizes, etc. with the drawings to see that the equipment will fit into the spaces provided without violation of applicable codes.

F. Should any changes to the Work indicated on the Drawings or described in the Specifications be necessary in order to comply with the above requirements, notify the Owner immediately and cease work on all parts of the contract, which are affected until approval for any required modifications to the construction has been obtained from the Owner.

G. Be responsible for any cooperative work, which must be altered due to lack of proper supervision or failure to make proper provisions in time. Such changes shall be under direction of the Owner and shall be made to his satisfaction. Perform all Work with competent and skilled personnel.

H. The electrical drawings do not indicate all fittings, hardware, or appurtenances required for a complete operating installation.

I. Wiring diagrams are not intended to indicate the exact course of raceways.

J. One-line and riser diagrams are only schematics and do not show physical arrangements of equipment.

K. All workmanship, including aesthetic as well as electrical aspects of the Work, shall be of the highest quality consistent with the best practices of the trade.

L. Replace or repair, without additional compensation, any Work, which, in the opinion of the Owner, does not comply with these requirements.

3.3 CLEANING & PAINTING OF EQUIPMENT

A. Refer to Division 09 for additional requirements.

B. Factory Applied:
   1. Electrical equipment shall have factory-applied painting systems, which shall, as a minimum, meet the requirements of NEMA ICS 6 corrosion-resistance test, except equipment specified to meet requirements of ANSI C37.20 shall have a finish as specified in ANSI C37.20.
   2. Refer to individual sections of this Division for more stringent requirements.

C. Field Applied: Paint electrical equipment as required to touch up, to match finish on other equipment in adjacent spaces, or to meet safety criteria.

D. After installation, all metal finishes shall be polished and cleaned of all dirt, rust, cement, plaster, grease, and paint.

END OF SECTION 260000

SECTION 260519 - LOW-VOLTAGE ELECTRICAL POWER CONDUCTORS AND CABLES

PART 1 - GENERAL

1.1 RELATED DOCUMENTS

A. Drawings and general provisions of the Contract, including General and Supplementary Conditions and Division 01 Specification Sections, apply to this Section.

1.2 SUMMARY

A. Section Includes:
1. Building wires and cables rated 600 V and less.
2. Connectors, splices, and terminations rated 600 V and less.

B. Related Requirements:
1. Section 260513 "Medium-Voltage Cables" for single-conductor and multiconductor cables, cable splices, and terminations for electrical distribution systems with 2001 to 35,000 V.
2. Section 260523 "Control-Voltage Electrical Power Cables" for control systems communications cables and Classes 1, 2 and 3 control cables.
3. Section 260533 “Raceways and Boxes for Electrical Systems"
4. Section 271500 "Communications Horizontal Cabling" for cabling used for voice and data circuits.
5. Section 260553 "Identification for Electrical Systems."

1.3 DEFINITIONS

A. ASTM: American Society of Testing Materials.

B. ICEA: Insulated Cable Engineers Association.

C. IEEE: Institute of Electrical & Electronics Engineers.

D. NEMA: National Electrical Manufacturers Association.

E. NETA ATS: InterNational Electrical Testing Association - Acceptance Testing Specification.

F. VFD: Variable frequency drive.

1.4 ACTION SUBMITTALS

A. Product Data: Submit manufacturer’s technical data for each type of product, indicating conductor/cable construction, insulation material, thickness of insulation, jacket, cable

stranding, and voltage rating of each type of conductor/cable specified, splices and terminations. Indicate date and place of manufacture for each conductor/cable, cable, splice and termination.

B. Manufacturer's ISO certification.

C. Product Cable Schedule: Indicate type, use, location, and termination locations.

1.5 INFORMATIONAL SUBMITTALS

A. Qualification Data: For Independent Testing Agency.

B. Field quality-control reports. Perform field testing of cables per para 3.8. Submit six (6) copies of field test reports to owner's representative within two (2) weeks of completion of test.

1.6 QUALITY ASSURANCE

A. General Requirements: The low voltage power conductors and cable shall be copper, minimum 600V rated unless otherwise indicated. Aluminum conductors and cables shall not be accepted unless otherwise indicated.

B. Materials and installation shall meet or exceed requirements in the following referenced standards and shall be listed and labelled by UL.
   1. ICEA S-95-658/ NEMA WC 70.
   2. AEIC CS8.
   3. UL 1072.
   4. IEEE.
   5. ASTM.
   6. NEMA.

C. Conductors and cables shall be of the same manufacturer and shipped to the job site in original unbroken reels.

D. Conductors and cables shall be manufactured with in twelve (12) months of installation. Date of manufacture shall be clearly marked on conductors or conductor reels.

E. Manufacturer shall have minimum ten (10) years experience in the manufacturer of conductors and cables similar to those specified on this project.

F. Manufacturer shall have ISO 9001 and ISO 9002 certification.

G. All conductors and cables shall be new and supplied by a local distributor.

H. If alternate manufacturer of products other than what are specified in this section are submitted, all necessary documents not limited to cut sheets, technical information, test reports from recognized testing labs and factory test reports shall be submitted to the satisfaction of the owner/engineer to ensure quality and conformance to the specifications. Additional testing shall be undertaken if it is concluded by the owner/engineer that the submitted test reports are either insufficient or do not include all tests necessary for product acceptance. The tests shall be

conducted by a recognized lab acceptable to the owner/engineer and all tests shall be witnessed by owner's/engineer's personnel. All testing procedures and test results shall be satisfactory to the owner/engineer. Contractor shall be responsible for arranging the tests, for transportation, food and lodging for minimum of one owner's/engineer's representative to witness the test at the testing lab. Include all costs for the above in the bid.

I. Testing: Provide the services of an independent qualified testing laboratory to perform the specified field tests. Notify the University's Representative fourteen (14) days in advance of performance of work requiring testing.

J. Conductors, cables, splices and terminations shall be manufactured within twelve (12) months of installation. Each item shall have a permanent marking on the product or the original manufacturers' package indicating the date of manufacture unless otherwise noted.

K. Testing Agency Qualifications:
   1. Testing agency shall be an independent company; shall have been a member of NETA for a minimum of last ten (10) years and has permanent in-house testing engineers and technicians involved with testing of low voltage electrical power conductors and cables similar to those specified on this project.
   2. Testing company shall be located with 50 miles radius of the project.
   3. Testing Agency's Field Supervisor: Certified by NETA to supervise on-site testing.
   4. Field Testing technician and supervisor shall have minimum ten (10) years' experience in field testing of low voltage power conductors and cables of the type and rating similar to the conductors and cables to be tested on this project.

PART 2 - PRODUCTS

2.1 CONDUCTORS AND CABLES

A. Manufacturers: Subject to compliance with requirements, provide products by one of the following manufacturers:

B. Basis-of-Design Product: ~~Subject to compliance with requirements, provide [**product indicated on Drawings**] <**Insert manufacturer's name; product name or designation**> or comparable product by one of the following:~~
   1. General Cable Technologies Corporation.
   2. Southwire Incorporated
   3. Alpha Wire.
   4. Belden Inc.
   5. Encore Wire Corporation..

C. Conductor Material: Electrical grade, soft drawn annealed copper, 98 percent conductivity, and fabricated in accordance with ASTM and ICEA standards. Minimum size is number 12 for branch circuits, number 14 stranded for control wiring. Aluminum conductors are not permitted. **Copper** Conductors: Comply with NEMA WC 70/ICEA S-95-658.

D. Conductor Insulation: Comply with NEMA WC 70/ICEA S-95-658 for Type THHN-2-THWN-2

E. VFD Cable:
   1. Comply with UL 1277, UL 1685, and NFPA 70 for Type TC-ER cable.

F. Provide separate neutral with each branch circuit serving outlets. When dedicated neutrals are provided, use color spiral to match associated phase.

2.2 CONNECTORS AND SPLICES

A. Manufacturers: Subject to compliance with requirements, provide products by one of the following manufacturers:
   1. Ideal Industries, Inc.
   2. Ilsco
   3. NSi Industries LLC.
   4. O-Z/Gedney; a brand of Emerson Industrial Automation.
   5. 3M; Electrical Markets Division.
   6. TE Connectivity - Raychem.

B. Description: Factory-fabricated connectors and splices of size, ampacity rating, material, type, and class for application and service indicated.

C. Copper conductors shall be terminated in copper or bronze mechanical connectors or lugs or tool applied compression connections made of copper for all connections except those on wiring devices.

D. Splices in wires No. 10 and smaller shall be made with twist-on splicing connector in accordance with UL486-C. Connections in wires No. 8 and larger shall be made with compression type connectors in accordance with UL486-A and wrapped with insulated tape in accordance with UL501. Insulating tape shall be applied in a minimum of two layers of half wrap or built to match the overall insulation of the wire.

E. Splices in underground pull boxes shall be made submersible type and made using “3M” Scotch-cast epoxy kits.

F. Pressure type connectors are not permitted.

2.3 SYSTEM DESCRIPTION

A. Electrical Components, Devices, and Accessories: UL Listed and labeled as defined in NFPA 70, by a qualified testing agency, and marked for intended location and application.

B. Comply with NFPA 70.

PART 3 - EXECUTION

3.1 CONDUCTOR MATERIAL APPLICATIONS

A. Feeders: [Copper. Solid for No. 10 AWG and smaller; stranded for No. 8 AWG and larger.

B. Branch Circuits: Copper. Solid for No. 10 AWG and smaller; stranded for No. 8 AWG and larger, except VFD cable, which shall be extra flexible stranded.

3.2 CONDUCTOR INSULATION AND MULTICONDUCTOR CABLE APPLICATIONS AND WIRING METHODS

A. Service Entrance: Type XHHW-2, single conductors in raceway.

B. Exposed Feeders: Type XHHW-2, single conductors in raceway.

C. Feeders Concealed in Ceilings, Walls, Partitions, and Crawlspaces: Type THHN-2-THWN-2, single conductors in raceway.

D. Feeders Concealed in Concrete, below Slabs-on-Grade, and Underground: Type THHN-2-THWN-2, single conductors in raceway.

E. Feeders Installed below Raised Flooring: Type THHN-2-THWN-2, single conductors in raceway.

F. Branch Circuits Concealed in Ceilings, Walls, and Partitions: Type THHN-2-THWN-2, single conductors in raceway.

G. Branch Circuits Concealed in Concrete, below Slabs-on-Grade, and Underground: Type THHN-2-THWN-2, single conductors in raceway.

H. Cord Drops and Portable Appliance Connections: Type SO, hard service cord with stainless-steel, wire-mesh, strain relief device at terminations to suit application.

I. VFD Output Circuits: Type XHHW-2 in metal conduit Type TC-ER cable with braided shield.

3.3 INSTALLATION OF CONDUCTORS AND CABLES

A. All conductors and cables shall be installed in a raceway.

B. Before installing conductors and cables in existing conduits, verify the continuity of each conduit; each surface conduit is properly supported per code and clear of any debris.

C. Complete raceway installation between conductor and cable termination points according to Section 260533 "Raceways and Boxes for Electrical Systems" prior to pulling conductors and cables.

D. Use manufacturer-approved pulling compound or lubricant where necessary; compound used must not deteriorate conductor or insulation. Do not exceed manufacturer's recommended maximum pulling tensions and sidewall pressure values.

E. Use pulling means, including fish tape, cable, rope, and basket-weave wire/cable grips, that will not damage cables or raceway.

F. Install exposed cables parallel and perpendicular to surfaces of exposed structural members and follow surface contours where possible.

G. Support cables according to Section 260529 "Hangers and Supports for Electrical Systems."

H. Complete cable tray systems installation according to Section 260536 "Cable Trays for Electrical Systems" prior to installing conductors and cables.

3.4 CONNECTIONS

A. Tighten electrical connectors and terminals according to manufacturer's published torque-tightening values. If manufacturer's torque values are not indicated, use those specified in UL 486A-486B.

B. Make splices, terminations, and taps that are compatible with conductor material and that possess equivalent or better mechanical strength and insulation ratings than unspliced conductors].
   1. Use oxide inhibitor in each splice, termination, and tap for aluminum conductors.

C. Wiring at Outlets: Install conductor at each outlet, with at least 6 inches (150 mm) of slack.

3.5 IDENTIFICATION

A. Each conductor shall be factory color coded by conductor manufacturer. Identify and color-code conductors and cables according to Section 260553 "Identification for Electrical Systems."

B. Identify each spare conductor at each end with identity number and location of other end of conductor and identify as spare conductor.

3.6 SLEEVE AND SLEEVE-SEAL INSTALLATION FOR ELECTRICAL PENETRATIONS

A. Install sleeves and sleeve seals at penetrations of exterior floor and wall assemblies. Comply with requirements in Section 260544 "Sleeves and Sleeve Seals for Electrical Raceways and Cabling."

3.7 FIRESTOPPING

A. Apply firestopping to electrical penetrations of fire-rated floor and wall assemblies to restore original fire-resistance rating of assembly according to Section 078413 "Penetration Firestopping."

3.8 FIELD QUALITY CONTROL

A. Testing Agency: Engage an independent qualified testing agency to perform tests and inspections.

B. Manufacturer's Field Service: Engage a factory-authorized service representative to test and inspect components, assemblies, and equipment installations, including connections.

C. Perform the following tests and inspections:
   1. After installing conductors and cables and before electrical circuitry has been energized, test service entrance conductors, feeder conductors and the conductors feeding the following critical equipment and services] for compliance with requirements.
      a. Generator and generator fed panels.
      b. Automatic transfer switch and load bank

   2. Perform each visual and mechanical inspection and electrical tests stated in latest NETA Acceptance Testing Specification section 7.3.2 (Inspection and Test Procedures-Cables, Low Voltage-600V Maximum). Certify compliance with test parameters per NETA tables.
   3. Infrared Scanning: After Substantial Completion, but not more than 60 days after Final Acceptance, perform an infrared scan of each splice in conductors No. 3 AWG and larger. Remove box and equipment covers so splices are accessible to portable scanner. Correct deficiencies determined during the scan.
      a. Follow-up Infrared Scanning: Perform an additional follow-up infrared scan of each splice 11 months after date of Substantial Completion.
      b. Instrument: Use an infrared scanning device designed to measure temperature or to detect significant deviations from normal values. Provide calibration record for device.
      c. Record of Infrared Scanning: Prepare a certified report that identifies splices checked and that describes scanning results. Include notation of deficiencies detected, remedial action taken, and observations after remedial action.

D. Test and Inspection Reports: Prepare a written report to record the following:
   1. Procedures used.
   2. Results that comply with requirements. Include color scan images.
   3. Results that do not comply with requirements and corrective action taken to achieve compliance with requirements.

E. Cables will be considered defective if they do not pass tests and inspections.

END OF SECTION 260519

SECTION 260526 - GROUNDING AND BONDING FOR ELECTRICAL SYSTEMS

PART 1 - GENERAL

1.1 RELATED DOCUMENTS

A. Drawings and general provisions of the Contract, including General and Supplementary Conditions and Division 01 Specification Sections, apply to this Section.

1.2 SUMMARY

A. Section Includes: Grounding systems and equipment.

B. Section includes grounding systems and equipment, plus the following special applications:
   1. Overhead-line grounding.
   2. Underground distribution grounding.
   3. Ground bonding common with lightning protection system.

1.3 Definitions:

A. NETA ATS: InterNational Electrical Testing Association - Acceptance Testing Specification.

B. NETA MTS: InterNational Electrical Testing Association - Maintenance Testing Specification.

C. NFPA : National Fire Protection Association.

D. IEEE: Institute of Electrical and Electronics Engineers

1.4 ACTION SUBMITTALS

A. Product Data: Submit manufacturer's technical catalog cuts for each type of product indicated.

B. Shop Drawings: Site drawings to scale including details showing location and size of each field connection of grounding system.
   1. Wiring Diagrams: Differentiate between manufacturer installed and field installed wiring.

C. Sustainable Design Submittals:
   1. Product Data: For each conductor and cable indicating lead content.

1.5 INFORMATIONAL SUBMITTALS

A. Informational Submittals: Plans drawn to scale (1/4”=1’-0”) showing dimensioned ~~as-built~~ locations of grounding features specified in "Field Quality Control" Article, including the following:
   1. Test wells.
   2. Ground rods.
   3. Ground rings.
   4. Grounding conductors, connectors.
   5. Grounding arrangements and connections for separately derived systems.
   6. Grounding for sensitive electronic equipment.

B. Qualification Data: For qualified independent testing agency and testing agency's field supervisor.

C. Field quality-control reports. Submit written test reports including the following:
   1. Test procedures used.
   2. Test results that comply with requirements.
   3. Results of failed tests and corrective action taken to achieve test results that comply with requirements.

1.6 CLOSEOUT SUBMITTALS

A. Operation and Maintenance Data: For grounding to include in emergency, operation, and maintenance manuals. In addition to items specified in Section 017823 "Operation and Maintenance Data," include the following:
   1. Instructions for periodic testing and inspection of grounding features at test wells ground rings grounding connections for separately derived systems based on NETA MTS and NFPA 70B.
      a. Tests shall determine if ground-resistance or impedance values remain within specified maximums, and instructions shall recommend corrective action if values do not.
      b. Include recommended testing intervals.

1.7 QUALITY ASSURANCE

A. Testing Agency Qualifications:
   1. Testing agency shall be an independent company; shall have been a member of NETA for a minimum of last ten (10) years and has permanent in-house testing engineers and technicians involved with testing of grounding systems similar to those specified on this project.
   2. Testing company shall be located with 50 miles radius of the project.
   3. Testing Agency's Field Supervisor: Currently certified by NETA to supervise on-site testing.
   4. Field Testing technician and supervisor shall have minimum ten (10) years’ experience in field testing of rounding systems of the type and rating similar to the systems to be tested on this project.

B. Electrical Components, Devices, and Accessories: Listed and labeled as defined in NFPA 70, by a qualified testing agency, and marked for intended location and application.

C. Comply with UL 467 for grounding and bonding materials and equipment.

PART 2 - PRODUCTS

2.1 GROUNDING ELECTRODES, CONDUCTORS, CONNECTOR, BUS:

A. Manufacturers: Subject to compliance with requirements, provide products by one of the following, or equal:
   1. Grounding Connectors, Bars and Rods:
      a. Erico - Pentair Electrical Fastening Solutions
      b. Burndy – A Hubbell Company.
      c. Ideal Industries, Inc.
      d. O-Z/Gedney Co. - A brand of Emerson Industrial Automation.
      e. Thomas & Betts - A Member of the ABB Group.
   2. Grounding Conductors and cables:
      a. Southwire
      b. American Insulated Wire
      c. Okonite

2.2 CONDUCTORS

A. Insulated Conductors: Copper wire or cable insulated for 600 V unless otherwise required by applicable Code or authorities having jurisdiction.

B. Bare Copper Conductors:
   1. Solid Conductors: ASTM B 3.
   2. Stranded Conductors: ASTM B 8.
   3. Tinned Conductors: ASTM B 33.
   4. Bonding Cable: 28 kcmil, 14 strands of No. 17 AWG conductor, 1/4 inch (6 mm) in diameter.
   5. Bonding Conductor: No. 4 or No. 6 AWG, stranded conductor.
   6. Bonding Jumper: Copper tape, braided conductors terminated with copper ferrules; 1-5/8 inches (41 mm) wide and 1/16 inch (1.6 mm) thick.
   7. Tinned Bonding Jumper: Tinned-copper tape, braided conductors terminated with copper ferrules; 1-5/8 inches (41 mm) wide and 1/16 inch (1.6 mm) thick.

C. Bare Grounding Conductor and Conductor Protector for Wood Poles:
   1. No. 4 AWG minimum, soft-drawn copper.
   2. Conductor Protector: Half-round PVC or wood molding; if wood, use pressure-treated fir, cypress, or cedar.

D. Grounding Bus: Predrilled rectangular bars of annealed copper, 1/4 by 4 inches (6.3 by 100 mm) in cross section, with 9/32-inch (7.14-mm) holes spaced 1-1/8 inches (28 mm) apart. Stand-off insulators for mounting shall comply with UL 891 for use in switchboards, 600 V. Lexan or PVC, impulse tested at 5000 V.

E. Lead Content: Less than 300 parts per million

2.3 CONNECTORS

A. Listed and labeled by UL for applications in which used and for specific types, sizes, and combinations of conductors and other items connected.

B. Bolted Connectors for Conductors, Rods and Pipes: Copper or copper alloy, pressure type with at least two bolts.
   1. Pipe Connectors: Clamp type, sized for pipe.

C. Welded Connectors: Exothermic-welding kits of types recommended by kit manufacturer for materials being joined and installation conditions.

D. Bus-bar Connectors: Mechanical type, cast silicon bronze, solderless compression-type wire terminals, and long-barrel, two-bolt connection to ground bus bar.

E. Lead Content: Less than 300 parts per million

2.4 GROUNDING ELECTRODES

A. Ground Rods: **Copper-clad 3/4 inch by 10 feet (19 mm by 3 m)** in diameter.

PART 3 - EXECUTION

3.1 APPLICATIONS

A. Conductors: Install solid conductor for No. **8** AWG and smaller, and stranded conductors for No. **6** AWG and larger unless otherwise indicated.

B. Underground Grounding Conductors: Install bare tinned-copper conductor, No. 2/0 AWG minimum.
   1. Bury at least 24 inches (600 mm) below grade.
   2. Duct-Bank Grounding Conductor: Bury 12 inches (300 mm) above duct bank when indicated as part of duct-bank installation.

C. Isolated Grounding Conductors: Green-colored insulation with continuous yellow stripe. On feeders with isolated ground, identify grounding conductor where visible to normal inspection, with alternating bands of green and yellow tape, with at least three bands of green and two bands of yellow.

D. Grounding Bus: Install in electrical and telephone equipment rooms, in rooms housing service equipment or IT rooms, and elsewhere as indicated.
   1. Install bus on insulated spacers 2 inches (50 mm) minimum from wall, 6 inches (150 mm) above finished floor unless otherwise indicated.
   2. Where indicated on both sides of doorways, route bus up to top of door frame, across top of doorway, and down to specified height above floor; connect to horizontal bus.

E. Conductor Terminations and Connections:
   1. Pipe and Equipment Grounding Conductor Terminations: Bolted connectors.

2. Underground Connections: Welded connectors except at test wells and as otherwise indicated.
3. Connections to Ground Rods at Test Wells: Bolted connectors.
4. Connections to Structural Steel: Welded connectors.

3.2 GROUNDING UNDERGROUND DISTRIBUTION SYSTEM COMPONENTS

A. Comply with IEEE C2 grounding requirements.

B. Grounding Manholes and Handholes: Install a driven ground rod through manhole or handhole floor, close to wall, and set rod depth so 4 inches (100 mm) will extend above finished floor. If necessary, install ground rod before manhole is placed and provide No. 1/0 AWG bare, tinned-copper conductor from ground rod into manhole through a waterproof sleeve in manhole wall. Protect ground rods passing through concrete floor with a double wrapping of pressure-sensitive insulating tape or heat-shrunk insulating sleeve from 2 inches (50 mm) above to 6 inches (150 mm) below concrete. Seal floor opening with waterproof, nonshrink grout.

C. Install #4/0 bare copper ground wire loop around the outside perimeter of the manhole, in soil, 12” above bottom of manhole. Cadweld ground wire loop to #4/0 bare copper ground wire connecting all exposed metal parts inside the manhole through a 1” opening at the top of manhole wall. Seal and waterproof opening after wire installation.

D. Grounding Connections to Manhole Components: Bond exposed-metal parts such as inserts, cable racks, pulling irons, ladders, and cable shields within each manhole or handhole, to ground rod or grounding conductor. Make connections with No. 4 AWG minimum, stranded, hard-drawn copper bonding conductor. Train conductors level or plumb around corners and fasten to manhole walls. Connect to cable armor and cable shields according to written instructions by manufacturer of splicing and termination kits.

E. Pad-Mounted Transformers and Medium Voltage Switches: Install two ground rods and ground ring around the pad. Ground pad-mounted equipment and noncurrent-carrying metal items associated with substations by connecting them to underground cable and grounding electrodes. Install tinned-copper conductor not less than No. 1/0 ~~2~~ AWG for ground ring and for taps to equipment grounding terminals. Bury ground ring not less than 6 inches (150 mm) from the foundation.

3.3 EQUIPMENT GROUNDING

A. Install insulated equipment grounding conductors with all feeders and branch circuits in the same conduit containing phase and neutral conductors. Comply with NFPA 70, Article 250, for types, sizes, and quantities of equipment grounding conductors, unless specific types, larger sizes, or more conductors than required by NFPA 70 are indicated.

B. Install insulated equipment grounding conductors with the following items, in addition to those required by NFPA 70. :
1. Feeders and branch circuits.
2. Lighting circuits.
3. Receptacle circuits.

4. Single-phase motor and appliance branch circuits.
5. Three-phase motor and appliance branch circuits.
6. Flexible raceway runs.
7. Armored and metal-clad cable runs.
8. Busway Supply Circuits: Install insulated equipment grounding conductor from grounding bus in the switchgear, switchboard, or distribution panel to equipment grounding bar terminal on busway.
9. Computer and Rack-Mounted Electronic Equipment Circuits: Install insulated equipment grounding conductor in branch-circuit runs from equipment-area power panels and power-distribution units.

C. Air-Duct Equipment Circuits: Install insulated equipment grounding conductor to duct-mounted electrical devices operating at 120 V and more, including air cleaners, heaters, dampers, humidifiers, and other duct electrical equipment. Bond conductor to each unit and to air duct and connected metallic piping.

D. Water Heater, Heat-Tracing, and Antifrost Heating Cables: Install a separate insulated equipment grounding conductor to each electric water heater and heat-tracing cable. Bond conductor to heater units, piping, connected equipment, and components.

E. Isolated Grounding Receptacle Circuits: Install an insulated equipment grounding conductor connected to the receptacle grounding terminal. Isolate conductor from raceway and from panelboard grounding terminals. Terminate at equipment grounding conductor terminal of the applicable derived system or service unless otherwise indicated.

F. Isolated Equipment Enclosure Circuits: For designated equipment supplied by a branch circuit or feeder, isolate equipment enclosure from supply circuit raceway with a nonmetallic raceway fitting listed for the purpose. Install fitting where raceway enters enclosure and install a separate insulated equipment grounding conductor. Isolate conductor from raceway and from panelboard grounding terminals. Terminate at equipment grounding conductor terminal of the applicable derived system or service unless otherwise indicated.

G. Signal and Communication Equipment: In addition to grounding and bonding required by NFPA 70, provide a separate grounding system complying with requirements in TIA/ATIS J-STD-607-A.
1. For telephone, alarm, voice and data, and other communication equipment, provide No. 4 AWG minimum insulated grounding conductor in raceway from grounding electrode system to each service location, terminal cabinet, wiring closet, and central equipment location.
2. Service and Central Equipment Locations and Wiring Closets: Terminate grounding conductor on a 1/4-by-4-by-12-inch (6.3-by-100-by-300-mm) grounding bus.
3. Terminal Cabinets: Terminate grounding conductor on cabinet grounding terminal.
4. All metallic conduits and cable tray shall be continuously bonded to maintain low resistance ground path and bonded back to the central equipment by the use of bonding jumpers where needed.

H. **Metal** Poles Supporting Outdoor Lighting Fixtures: Install grounding electrode next to the pole and a separate insulated equipment grounding conductor in addition to grounding conductor installed with branch-circuit conductors. Provide a handhole for the grounding electrode at each pole.

I. Metallic Fences or Other Metal Structures: Comply with requirements of IEEE C2. Bond metallic fences and other metal structures located within 8 feet (2.5 m) vertically or 16 feet (5 m) horizontally of exposed conductors or equipment.
   1. Grounding Conductor: Bare**, tinned**-copper, not less than **No. 8** AWG.
   2. Gates: Shall be bonded to the gate support post with a flexible bonding jumper. Bond each gate support post to the grounding electrode system in the area.
   3. Provide bond across fence openings with 2 AWG bonding jumper buried 18 inches (460 mm) minimum below finished grade. Extend local grounding electrode system to cover swing of gates.
   4. Barbed Wire: Strands shall be bonded to the grounding conductor.

J. Generator (Non-Separately Derived System): Install grounding electrode(s) at the generator location. The electrode shall be connected to the equipment grounding conductor and to the frame of the generator. Maintain separation of neutral and ground. Provide warning sign at neutral to ground bond location: "WARNING: SHOCK HAZARD EXISTS IF GROUNDING ELECTRODE CONDUCTOR OR BONDING JUMPER CONNECTION IN THIS EQUIPMENT IS REMOVED WHILE ALTERNATE SOURCE IS ENERGIZED."

K. Hospitals and Healthcare Facilities:
   1. Use metal conduits and raceway systems that qualify as a ground return path for feeders and branch circuits serving patient care areas.
   2. Provide a bonded connection at all conduit terminations and junction points for feeders supplying panelboards, switchboards, and switchgear
   3. Bond all panelboards together, serving the same patient care vicinity, with a minimum 10 AWG copper bonding conductor.

L. Isolated ground receptacles are prohibited for use in patient care areas.

3.4 INSTALLATION

A. Grounding Conductors: Route along shortest and straightest paths possible unless otherwise indicated or required by Code. Avoid obstructing access or placing conductors where they may be subjected to strain, impact, or damage.

B. Ground Bonding Common with Lightning Protection System: Comply with NFPA 780 and UL 96 when interconnecting with lightning protection system. Bond electrical power system ground directly to lightning protection system grounding conductor at closest point to electrical service grounding electrode. Use bonding conductor sized same as system grounding electrode conductor and install in conduit.

C. Ground Rods: Drive rods until tops are 2 inches (50 mm) below finished floor or final grade unless otherwise indicated.
   1. Interconnect ground rods with grounding electrode conductor below grade using exothermic welds, except at test wells and as otherwise indicated. Make connections without exposing steel or damaging coating if any.
   2. For grounding electrode system, install ground rods at least **three** rods (unless otherwise indicated on the drawings), spaced at least one-rod length from each other and located at least the same distance from other grounding electrodes, and connect to the service grounding electrode conductor.

D. Test Wells: Ground rod driven through drilled hole in bottom of handhole. Handholes are specified in Section 260543 "Underground Ducts and Raceways for Electrical Systems," and shall be at least 12 inches (300 mm) deep, with cover.
   1. Test Wells: Install at least one test well for each service unless otherwise indicated. Install at the ground rod electrically closest to service entrance. Set top of test well flush with finished grade or floor.
   2. Test Wells near light poles: Coordinate location with landscape drawings and install one at each pole. Test well shall be open bottom and installed on a 12”H bed of gravel or crushed stone (1” size).

E. Bonding Straps and Jumpers: Install in locations accessible for inspection and maintenance except where routed through short lengths of conduit.
   1. Bonding to Structure: Bond straps directly to basic structure, taking care not to penetrate any adjacent parts.
   2. Bonding to Equipment Mounted on Vibration Isolation Hangers and Supports: Install bonding so vibration is not transmitted to rigidly mounted equipment.
   3. Use exothermic-welded connectors for outdoor locations; if a disconnect-type connection is required, use a bolted clamp.

F. Grounding and Bonding for Piping:
   1. Metal Water Service Pipe: Install insulated copper grounding conductors, in conduit, from building's main service equipment, or grounding bus, to main metal water service entrances to building. Connect grounding conductors to main metal water service pipes; use a bolted clamp connector or bolt a lug-type connector to a pipe flange by using one of the lug bolts of the flange. Where a dielectric main water fitting is installed, connect grounding conductor on street side of fitting. Bond metal grounding conductor conduit or sleeve to conductor at each end.
   2. Separately Derived System (SDS): All multiple branch metal water piping laterals originating from outside the area being served by the SDS and which serve the same area being served by the SDS shall be bonded to the common grounding electrode (GE) or the common grounding electrode conductor (GEC). The bonding connection shall be made at each level that the metal water piping serves. When multiple SDS’s are installed or an SDS serves multiple levels of a structure, a copper common GEC shall be installed for the SDS as permitted in NFPA 70 article 250.30 (D)3 and sized per article 250.30 (A) and (B).
   3. Water Meter Piping: Use braided-type bonding jumpers to electrically bypass water meters. Connect to pipe with a bolted connector.
   4. Bond each aboveground portion of gas piping system downstream from equipment shutoff valve.

G. Bonding Interior Metal Ducts: Bond metal air ducts to equipment grounding conductors of associated fans, blowers, electric heaters, and air cleaners. Install [**tinned**]bonding jumper to bond across flexible duct connections to achieve continuity.

H. Grounding for Steel Building Structure: Install a driven ground rod at base of each corner column and at intermediate exterior columns at distances not more than 60 feet (18 m) apart.

I. Ground Ring: Install a grounding conductor, electrically connected to each building structure ground rod and to each steel column, extending around the perimeter of building.

1. Install tinned-copper conductor not less than No. 4/0 AWG for ground ring and for taps to building steel.
2. Bury ground ring not less than 24 inches (600 mm) from building's foundation.

J. Ufer Ground (Concrete-Encased Grounding Electrode): Fabricate according to NFPA 70; use a minimum of 20 feet (6 m) of bare copper conductor not smaller than No. 4 AWG.
1. If concrete foundation is less than 20 feet (6 m) long, coil excess conductor within base of foundation.
2. Bond grounding conductor to reinforcing steel in at least four locations and to anchor bolts. Extend grounding conductor below grade and connect to building's grounding grid or to grounding electrode external to concrete.

3.5 LABELING

A. Comply with requirements in Section 260553 "Identification for Electrical Systems" for instruction signs. The label or its text shall be green.

B. Install labels at the telecommunications bonding conductor and grounding equalizer and at the grounding electrode conductor where exposed.
1. Label Text: "If this connector or cable is loose or if it must be removed for any reason, notify the facility manager."

3.6 FIELD QUALITY CONTROL

A. Testing Agency: Engage an independent qualified testing agency to perform tests and inspections. Refer to section

B. Manufacturer's Field Service: Engage a factory-authorized service representative to inspect, test, and adjust components, assemblies, and equipment installations, including connections.

C. Perform tests and inspections.
1. Manufacturer's Field Service: Engage a factory-authorized service representative to inspect components, assemblies, and equipment installations, including connections, and to assist in testing.

D. Tests and Inspections:
1. After installing grounding system but before permanent electrical circuits have been energized, test for compliance with requirements.
2. Inspect physical and mechanical condition. Verify tightness of accessible, bolted, electrical connections with a calibrated torque wrench according to manufacturer's written instructions.
3. Test completed grounding system at each location where a maximum ground-resistance level is specified, at service disconnect enclosure grounding terminal, at ground test wells, and at individual ground rods. Make tests at ground rods before any conductors are connected.
   a. Measure ground resistance no fewer than two full days after last trace of precipitation and without soil being moistened by any means other than natural

drainage or seepage and without chemical treatment or other artificial means of reducing natural ground resistance.

b. Perform tests by fall-of-potential method according to IEEE 81.

4. Prepare dimensioned Drawings locating each test well, ground rod and ground-rod assembly, and other grounding electrodes. Identify each by letter in alphabetical order, and key to the record of tests and observations. Include the number of rods driven and their depth at each location and include observations of weather and other phenomena that may affect test results. Describe measures taken to improve test results.

E. Grounding system will be considered defective if it does not pass tests and inspections.

F. Prepare test and inspection reports.

G. Report measured ground resistances that exceed the following values:
1. Power and Lighting Equipment or System with Capacity of 500 kVA and Less: 5 ohms.
2. Power and Lighting Equipment or System with Capacity of 500 to 1000 kVA: 5 ohms.
3. Power and Lighting Equipment or System with Capacity More Than 1000 kVA: 3 ohms.
4. Power Distribution Units or Panelboards Serving Electronic Equipment: 3 ohm(s).
5. Substations and Pad-Mounted Equipment: 5 ohms.
6. Manhole Grounds: 5 ohms.

H. Excessive Ground Resistance: If resistance to ground exceeds specified values, notify Architect promptly and include recommendations to reduce ground resistance.

END OF SECTION 260526

SECTION 260529 - HANGERS AND SUPPORTS FOR ELECTRICAL SYSTEMS

PART 1 - GENERAL

1.1 RELATED DOCUMENTS

A. Drawings and general provisions of the Contract, including General and Supplementary Conditions and Division 01 Specification Sections, apply to this Section.

1.2 SUMMARY

A. This Section includes the following:
   1. Hangers and supports for electrical equipment and systems.
   2. Construction requirements for concrete bases.

B. Related Sections include the following:
   1. Section 260548.16 "Seismic Controls for Electrical Systems" for products and installation requirements necessary for compliance with seismic criteria.

1.3 DEFINITIONS

A. EMT: Electrical metallic tubing.

B. IMC: Intermediate metal conduit.

C. RMC: Rigid metal conduit.

1.4 PERFORMANCE REQUIREMENTS

A. Delegated Design: Design supports for multiple raceways, including comprehensive engineering analysis by a qualified professional engineer, using performance requirements and design criteria indicated.

B. Design supports for multiple raceways capable of supporting combined weight of supported systems and its contents.

C. Design equipment supports capable of supporting combined operating weight of supported equipment and connected systems and components.

D. Rated Strength: Adequate in tension, shear, and pullout force to resist maximum loads calculated or imposed for this Project, with a minimum structural safety factor of **five** times the applied force.

1.5 ACTION SUBMITTALS

A. Product Data: For the following:
   1. Steel slotted support systems.
   2. Nonmetallic slotted support systems.

B. Shop Drawings: **Signed and sealed by a qualified professional engineer.** Show fabrication and installation details and include calculations for the following:
   1. Trapeze hangers. Include Product Data for components.
   2. Steel slotted channel systems. Include Product Data for components.
   3. Nonmetallic slotted channel systems. Include Product Data for components.
   4. Equipment supports.

1.6 INFORMATIONAL SUBMITTALS

A. Welding certificates.

1.7 QUALITY ASSURANCE

A. Welding: Qualify procedures and personnel according to AWS D1.1/D1.1M, "Structural Welding Code - Steel."

B. Comply with NFPA 70.

1.8 COORDINATION

A. Coordinate size and location of concrete bases. Cast anchor-bolt inserts into bases. Concrete, reinforcement, and formwork requirements are specified together with concrete Specifications.

B. Coordinate installation of roof curbs, equipment supports, and roof penetrations. These items are specified in Section 077200 "Roof Accessories."

PART 2 - PRODUCTS

2.1 SUPPORT, ANCHORAGE, AND ATTACHMENT COMPONENTS

A. Steel Slotted Support Systems: Comply with MFMA-4, factory-fabricated components for field assembly.
   1. Available Manufacturers: Subject to compliance with requirements, manufacturers offering products that may be incorporated into the Work include, but are not limited to, the following:
   2. Manufacturers: Subject to compliance with requirements, provide products by one of the following:

a. Allied Tube & Conduit: Part of Atkore International
b. Cooper B-Line, Inc.; a division of Eaton Inc.
c. ERICO International Corporation.
d. GS Metals Corp.
e. Thomas & Betts Corporation: A Member of the ABB Group.
f. Unistrut; Part of Atkore International,
g. Wesanco, Inc.

3. Metallic Coatings: Hot-dip galvanized after fabrication and applied according to MFMA-4.
4. Nonmetallic Coatings: Manufacturer's standard PVC, polyurethane, or polyester coating applied according to MFMA-4.
5. Painted Coatings: Manufacturer's standard painted coating applied according to MFMA-4.
6. Channel Dimensions: Selected for applicable load criteria.

B. Raceway and Cable Supports: As described in NECA 1 and NECA 101.

C. Conduit and Cable Support Devices: **Steel** hangers, clamps, and associated fittings, designed for types and sizes of raceway or cable to be supported.

D. Support for Conductors in Vertical Conduit: Factory-fabricated assembly consisting of threaded body and insulating wedging plug or plugs for non-armored electrical conductors or cables in riser conduits. Plugs shall have number, size, and shape of conductor gripping pieces as required to suit individual conductors or cables supported. Body shall be malleable iron.

E. Structural Steel for Fabricated Supports and Restraints: ASTM A 36/A 36M, steel plates, shapes, and bars; black and galvanized.

F. Mounting, Anchoring, and Attachment Components: Items for fastening electrical items or their supports to building surfaces include the following:
1. Powder-Actuated Fasteners: Threaded-steel stud, for use in hardened portland cement concrete, steel, or wood, with tension, shear, and pullout capacities appropriate for supported loads and building materials where used.

a. Available Manufacturers: Subject to compliance with requirements, manufacturers offering products that may be incorporated into the Work include, but are not limited to, the following:
b. <u>Manufacturers</u>: Subject to compliance with requirements, provide products by one of the following:

1) Hilti Inc.
2) ITW Ramset/Red Head; a division of Illinois Tool Works, Inc.
3) MKT Fastening, LLC.
4) Simpson Strong-Tie Co., Inc.; Masterset Fastening Systems Unit.

2. Mechanical-Expansion Anchors: Insert-wedge-type, **zinc-coated** steel, for use in hardened portland cement concrete with tension, shear, and pullout capacities appropriate for supported loads and building materials in which used.

a. Available Manufacturers: Subject to compliance with requirements, manufacturers offering products that may be incorporated into the Work include, but are not limited to, the following:
b. Manufacturers: Subject to compliance with requirements, provide products by one of the following:

1) Cooper B-Line, Inc.; a division of Cooper Industries.
2) Empire Tool and Manufacturing Co., Inc.
3) Hilti Inc.
4) ITW Ramset/Red Head; a division of Illinois Tool Works, Inc.
5) MKT Fastening, LLC.
6)

3. Concrete Inserts: Steel or malleable-iron, slotted support system units similar to MSS Type 18; complying with MFMA-4 or MSS SP-58.
4. Clamps for Attachment to Steel Structural Elements: MSS SP-58, type suitable for attached structural element.
5. Through Bolts: Structural type, hex head, and high strength. Comply with ASTM A 325.
6. Toggle Bolts: All-steel springhead type.
7. Hanger Rods: Threaded steel.

2.2 FABRICATED METAL EQUIPMENT SUPPORT ASSEMBLIES

A. Description: Welded or bolted, structural-steel shapes, shop or field fabricated to fit dimensions of supported equipment.

B. Materials: Comply with requirements in Section 055000 "Metal Fabrications" for steel shapes and plates.

PART 3 - EXECUTION

3.1 APPLICATION

A. Comply with NECA 1 and NECA 101 for application of hangers and supports for electrical equipment and systems except if requirements in this Section are stricter.

B. Maximum Support Spacing and Minimum Hanger Rod Size for Raceway: Space supports for EMT, IMC, and RMC as scheduled in NECA 1, where its Table 1 lists maximum spacings less than stated in NFPA 70. Minimum rod size shall be 1/4 inch in diameter.

C. Multiple Raceways or Cables: Install trapeze-type supports fabricated with steel slotted support system, sized so capacity can be increased by at least 25 percent in future without exceeding specified design load limits.
1. Secure raceways and cables to these supports with two-bolt conduit clamps

D. Spring-steel clamps designed for supporting single conduits without bolts may be used for 1-1/2-inch and smaller raceways serving branch circuits and communication systems above suspended ceilings and for fastening raceways to trapeze supports.

3.2 SUPPORT INSTALLATION

A. Comply with NECA 1 and NECA 101 for installation requirements except as specified in this Article.

B. Raceway Support Methods: In addition to methods described in NECA 1, EMT or RMC may be supported by openings through structure members, as permitted in NFPA 70.

C. Strength of Support Assemblies: Where not indicated, select sizes of components so strength will be adequate to carry present and future static loads within specified loading limits. Minimum static design load used for strength determination shall be weight of supported components plus 200 lb.

D. Mounting and Anchorage of Surface-Mounted Equipment and Components: Anchor and fasten electrical items and their supports to building structural elements by the following methods unless otherwise indicated by code:
   1. To Wood: Fasten with lag screws or through bolts.
   2. To New Concrete: Bolt to concrete inserts.
   3. To Masonry: Approved toggle-type bolts on hollow masonry units and expansion anchor fasteners on solid masonry units. HILTI KB TZ Expansion Anchors (ICC ESR 3785) or Equivalent
   4. To Steel: Beam clamps (MSS Type 19, 21, 23, 25, or 27) complying with MSS SP-69.
   5. To Light Steel: Sheet metal screws.
   6. Items Mounted on Hollow Walls and Nonstructural Building Surfaces: Mount cabinets, panelboards, disconnect switches, control enclosures, pull and junction boxes, transformers, and other devices on slotted-channel racks attached to substrate by means that meet seismic-restraint strength and anchorage requirements.

E. Drill holes for expansion anchors in concrete at locations and to depths that avoid reinforcing bars.

3.3 INSTALLATION OF FABRICATED METAL SUPPORTS

A. Comply with installation requirements in Section 055000 "Metal Fabrications" for site-fabricated metal supports.

B. Cut, fit, and place miscellaneous metal supports accurately in location, alignment, and elevation to support and anchor electrical materials and equipment.

C. Field Welding: Comply with AWS D1.1/D1.1M.

3.4 CONCRETE BASES

A. Construct concrete bases of dimensions indicated but not less than 4 inches larger in both directions than supported unit, and so anchors will be a minimum of 10 bolt diameters from edge of the base.

B. Use 3000-psi, 28-day compressive-strength concrete. Concrete materials, reinforcement, and placement requirements are specified in Section 033000 "Cast-in-Place Concrete."

C. Anchor equipment to concrete base.
   1. Place and secure anchorage devices. Use supported equipment manufacturer's setting drawings, templates, diagrams, instructions, and directions furnished with items to be embedded.
   2. Install anchor bolts to elevations required for proper attachment to supported equipment.
   3. Install anchor bolts according to anchor-bolt manufacturer's written instructions.

3.5 PAINTING

A. Touchup: Clean field welds and abraded areas of shop paint. Paint exposed areas immediately after erecting hangers and supports. Use same materials as used for shop painting. Comply with SSPC-PA 1 requirements for touching up field-painted surfaces.
   1. Apply paint by brush or spray to provide minimum dry film thickness of 2.0 mils.

B. Touchup: Comply with requirements in Section 099000 "Painting" and Section 099623 “Graffiti Resistant Coatings for cleaning and touchup painting of field welds, bolted connections, and abraded areas of shop paint on miscellaneous metal.

C. Galvanized Surfaces: Clean welds, bolted connections, and abraded areas and apply galvanizing-repair paint to comply with ASTM A 780.

END OF SECTION 260529

SECTION 260533 - RACEWAYS AND BOXES FOR ELECTRICAL SYSTEMS

PART 1 - GENERAL

1.1 RELATED DOCUMENTS

A. Drawings and general provisions of the Contract, including General and Supplementary Conditions and Division 01 Specification Sections, apply to this Section.

1.2 SUMMARY

A. Section Includes:
1. Metal conduits, tubing, and fittings.
2. Nonmetal conduits, tubing, and fittings.
3. Metal wireways and auxiliary gutters.
4. Nonmetal wireways and auxiliary gutters.
5. Surface raceways.
6. Boxes, enclosures, and cabinets.
7. Handholes and boxes for exterior underground cabling.

B. Related Requirements:
1. Section 260543 "Underground Ducts and Raceways for Electrical Systems" for exterior ductbanks, manholes, and underground utility construction.
2. Section 270528 "Pathways for Communications Systems" for conduits, wireways, surface pathways, innerduct, boxes, faceplate adapters, enclosures, cabinets, and handholes serving communications systems.
3. Section 280528 "Pathways for Electronic Safety and Security" for conduits, surface pathways, innerduct, boxes, and faceplate adapters serving electronic safety and security.

1.3 DEFINITIONS

A. ARC: Aluminum rigid conduit.

B. EMT: Electrical metal tubing

C. ENT: Electrical non-metallic tubing

D. GRC: Galvanized rigid steel conduit.

E. HDPE: High density polyethylene pipe

F. IMC: Intermediate metal conduit.

G. LFMC: Liquidtite flexible metal conduit

H. LFNC: Liquitite flexible non-metallic conduit.

I. RNC: Rigid non-metallic conduit

J. RTRC: Reinforced thermosetting resin conduit

1.4 QUALITY ASSURANCE:

A. Each conduit shall bear manufacturer's trademark and UL label.

B. Each type of conduit and fittings shall be of a single manufacturer. Multiple manufacturer's of the same material are not acceptable.

C. Comply with California Electric Code (CEC)

1.5 ACTION SUBMITTALS

A. Product Data: For surface raceways, wireways and fittings, floor boxes, hinged-cover enclosures, and cabinets.

B. LEED Submittals:
   1. Product Data for Credit IEQ 4.1: For solvent cements and adhesive primers, documentation including printed statement of VOC content.
   2. Laboratory Test Reports for Credit IEQ 4: For solvent cements and adhesive primers, documentation indicating that products comply with the testing and product requirements of the California Department of Health Services' "Standard Practice for the Testing of Volatile Organic Emissions from Various Sources Using Small-Scale Environmental Chambers."

C. Shop Drawings: For custom enclosures and cabinets. Include plans, elevations, sections, and attachment details.

1.6 INFORMATIONAL SUBMITTALS

A. Coordination Drawings: Conduit routing plans, drawn to scale, on which the following items are shown and coordinated with each other, using input from installers of items involved:
   1. Structural members in paths of conduit groups with common supports.
   2. HVAC and plumbing items and architectural features in paths of conduit groups with common supports.

B. Qualification Data: For professional engineer.

C. Seismic Qualification Certificates: For enclosures, cabinets, and conduit racks and their mounting provisions, including those for internal components, from manufacturer.
   1. Basis for Certification: Indicate whether withstand certification is based on actual test of assembled components or on calculation.
   2. Dimensioned Outline Drawings of Equipment Unit: Identify center of gravity and locate and describe mounting and anchorage provisions.

3. Detailed description of equipment anchorage devices on which the certification is based and their installation requirements.
4. Detailed description of conduit support devices and interconnections on which the certification is based and their installation requirements.

D. Source quality-control reports.

PART 2 - PRODUCTS

2.1 METAL CONDUITS, TUBING, AND FITTINGS

A. Manufacturers: Subject to compliance with requirements provide products by one of the following:
1. Allied Tube & Conduit; a Tyco International Ltd. Co.
2. Electri-Flex Company.
3. O-Z/Gedney; a brand of EGS Electrical Group.
4. Republic Conduit.
5. Robroy Industries.
6. Thomas & Betts Corporation.
7. Western Tube and Conduit Corporation.
8. Wheatland Tube Company; a division of John Maneely Company.

B. Listing and Labeling: Metal conduits, tubing, and fittings shall be UL listed and labeled as defined in NFPA 70, ~~by a qualified testing agency~~, and marked for intended location and application.

C. GRC: Comply with ANSI C80.1 and UL 6.

D. ARC: Comply with ANSI C80.5 and UL 6A.

E. IMC: Comply with ANSI C80.6 and UL 1242.

F. PVC-Coated Steel Conduit: PVC-coated rigid steel conduit.
1. Comply with NEMA RN 1.
2. Coating Thickness: 0.040 inch, minimum.

G. EMT: Comply with ANSI C80.3 and UL 797.

H. FMC: Comply with UL 1; zinc-coated steel.

I. LFMC: Flexible steel conduit with PVC jacket and complying with UL 360.

J. Fittings for Metal Conduit: Comply with NEMA FB 1 and UL 514B.
1. Coordinate "Conduit Fittings for Hazardous (Classified) Locations" Subparagraph below with Drawings.
2. Conduit Fittings for Hazardous (Classified) Locations: Comply with UL 886 and NFPA 70.
   1. Fittings for EMT:

a. Material: Steel.
b. Type: Compression.

2. Expansion Fittings: PVC or steel to match conduit type, complying with UL 651, rated for environmental conditions where installed, and including flexible external bonding jumper.

3. Coating for Fittings for PVC-Coated Conduit: Minimum thickness of 0.040 inch, with overlapping sleeves protecting threaded joints.

B. Joint Compound for IMC, GRC, or ARC: Approved, as defined in NFPA 70, by authorities having jurisdiction for use in conduit assemblies, and compounded for use to lubricate and protect threaded conduit joints from corrosion and to enhance their conductivity.

K. Joint Compound for IMC, GRC, or ARC: Approved, as defined in NFPA 70, by authorities having jurisdiction for use in conduit assemblies, and compounded for use to lubricate and protect threaded conduit joints from corrosion and to enhance their conductivity.

2.2 NONMETALLIC CONDUITS, TUBING, AND FITTINGS

A. Manufacturers: Subject to compliance with requirements provide products by one of the following:
1. CANTEX Inc.
2. Condux International, Inc.
3. Electri-Flex Company.
4. Lamson & Sessions; Carlon Electrical Products.
5. RACO; a Hubbell company.
6. Thomas & Betts Corporation.

B. Listing and Labeling: Nonmetallic conduits, tubing, and fittings shall be listed and labeled as defined in NFPA 70, by a qualified testing agency, and marked for intended location and application.

C. ENT: Comply with NEMA TC 13 and UL 1653.

D. RNC: Type EPC-40-PVC, complying with NEMA TC 2 and UL 651 unless otherwise indicated.

E. LFNC: Comply with UL 1660.

F. Rigid HDPE: Comply with UL 651A.

G. Continuous HDPE: Comply with UL 651B.

H. Coilable HDPE: Preassembled with conductors or cables, and complying with ASTM D 3485.

I. RTRC: Comply with UL 1684A and NEMA TC 14.

J. Fittings for ENT and RNC: Comply with NEMA TC 3; match to conduit or tubing type and material.

K. Fittings for LFNC: Comply with UL 514B.

L. Solvent cements and adhesive primers shall have a VOC content of 510 and 550 g/L or less, respectively, when calculated according to 40 CFR 59, Subpart D (EPA Method 24).

M. Solvent cements and adhesive primers shall comply with the testing and product requirements of the California Department of Health Services' "Standard Practice for the Testing of Volatile Organic Emissions from Various Sources Using Small-Scale Environmental Chambers."

2.3 METAL WIREWAYS AND AUXILIARY GUTTERS

A. Manufacturers: Subject to compliance with requirements provide products by one of the following:
   1. Cooper B-Line, Inc.
   2. Hoffman; a Pentair company.
   3. Mono-Systems, Inc.
   4. Square D; a brand of Schneider Electric.

B. Description: Sheet metal, complying with UL 870 and NEMA 250, Type 1 or Type 3R unless otherwise indicated, and sized according to NFPA 70.
   1. Metal wireways installed outdoors shall be listed and labeled as defined in NFPA 70, by a qualified testing agency, and marked for intended location and application.

C. Fittings and Accessories: Include covers, couplings, offsets, elbows, expansion joints, adapters, hold-down straps, end caps, and other fittings to match and mate with wireways as required for complete system.

D. Wireway Covers: Hinged type, screw-cover type, and flanged-and-gasketed type unless otherwise indicated.

E. Finish: Manufacturer's standard enamel finish.

2.4 NONMETALLIC WIREWAYS AND AUXILIARY GUTTERS

A. Manufacturers: Subject to compliance with requirements provide products by one of the following:
   1. Allied Moulded Products, Inc.
   2. Hoffman; a Pentair company.
   3. Lamson & Sessions; Carlon Electrical Products.

B. Listing and Labeling: Nonmetallic wireways and auxiliary gutters shall be listed and labeled as defined in NFPA 70, by a qualified testing agency, and marked for intended location and application.

C. Description: Fiberglass polyester, extruded and fabricated to required size and shape, without holes or knockouts. Cover shall be gasketed with oil-resistant gasket material and fastened with captive screws treated for corrosion resistance. Connections shall be flanged and have stainless-steel screws and oil-resistant gaskets.

D. Description: PVC, extruded and fabricated to required size and shape, and having snap-on cover, mechanically coupled connections, and plastic fasteners.

E. Fittings and Accessories: Couplings, offsets, elbows, expansion joints, adapters, hold-down straps, end caps, and other fittings shall match and mate with wireways as required for complete system.

F. Solvent cements and adhesive primers shall have a VOC content of 510 and 550 g/L or less, respectively, when calculated according to 40 CFR 59, Subpart D (EPA Method 24).

G. Solvent cements and adhesive primers shall comply with the testing and product requirements of the California Department of Health Services' "Standard Practice for the Testing of Volatile Organic Emissions from Various Sources Using Small-Scale Environmental Chambers."

2.5 SURFACE RACEWAYS

A. Listing and Labeling: Surface raceways and tele-power poles shall be UL listed and labeled as defined in NFPA 70, and marked for intended location and application.

B. Surface Metal Raceways: Galvanized steel with snap-on covers complying with UL 5. Manufacturer's standard enamel finish in color selected by Architect.
   1. Manufacturers: Subject to compliance with requirements provide products by one of the following:
      a. Hubbell Wiring Systems
      b. Wiremold / Legrand.
      c. Mono-Systems, Inc.
      d. Panduit Corp.

C. Surface Nonmetallic Raceways: Two- or three-piece construction, complying with UL 5A, and manufactured of rigid PVC with texture and color selected by Architect from manufacturer's standard colors. Product shall comply with UL 94 V-0 requirements for self-extinguishing characteristics.
   1. Manufacturers: Subject to compliance with requirements provide products by one of the following:
      a. Hubbell Incorporated; Wiring Device-Kellems Division.
      b. Wiremold / Legrand.
      c. Mono-Systems, Inc.
      d. Panduit Corp.

BOXES, ENCLOSURES, AND CABINETS

A. Manufacturers: Subject to compliance with requirements provide products by one of the following:
   1. Cooper Technologies Company; Cooper Crouse-Hinds.
   2. EGS/Appleton Electric.
   3. Hoffman; a Pentair company.
   4. Hubbell Incorporated; Killark Division.
   5. O-Z/Gedney; a brand of EGS Electrical Group.

6. RACO; a Hubbell Company.
7. Robroy Industries.
8. Thomas & Betts Corporation.
9. Wiremold / Legrand.

B. General Requirements for Boxes, Enclosures, and Cabinets: Boxes, enclosures, and cabinets installed in wet locations shall be listed for use in wet locations.

C. Sheet Metal Outlet and Device Boxes: Comply with NEMA OS 1 and UL 514A.

D. Cast-Metal Outlet and Device Boxes: Comply with NEMA FB 1, aluminum, Type FD, with gasketed cover.

E. Nonmetallic Outlet and Device Boxes: Comply with NEMA OS 2 and UL 514C.

F. Metal Floor Boxes:
1. Material: Cast metal.
2. Type: Fully adjustable.
3. Shape: Rectangular.
4. Listing and Labeling: Metal floor boxes shall be listed and labeled as defined in NFPA 70, by a qualified testing agency, and marked for intended location and application.

G. Nonmetallic Floor Boxes are prohibited.

H. Luminaire Outlet Boxes: Nonadjustable, designed for attachment of luminaire weighing 50 lb. Outlet boxes designed for attachment of luminaires weighing more than 50 lb shall be listed and marked for the maximum allowable weight.

I. Small Sheet Metal Pull and Junction Boxes: NEMA OS 1.

J. Cast-Metal Access, Pull, and Junction Boxes: Comply with NEMA FB 1 and UL 1773, cast aluminum / galvanized with gasketed cover.

K. Box extensions used to accommodate new building finishes shall be of same material as recessed box.

L. Device Box Dimensions: 4 inches square by 2-1/8 inches deep.

M. Gangable boxes are prohibited.

N. Hinged-Cover Enclosures: Comply with UL 50 and NEMA 250, Type 1 and Type 3R with continuous-hinge cover with flush latch unless otherwise indicated.
1. Metal Enclosures: Steel, finished inside and out with manufacturer's standard enamel.
2. Nonmetallic Enclosures: Plastic.
3. Interior Panels: Steel; all sides finished with manufacturer's standard enamel.

O. Cabinets:
1. NEMA 250, Type 1 and Type 3R galvanized-steel box with removable interior panel and removable front, finished inside and out with manufacturer's standard enamel.

2. Hinged door in front cover with flush latch and concealed hinge.
3. Key latch to match panelboards.
4. Metal barriers to separate wiring of different systems and voltage.
5. Accessory feet where required for freestanding equipment.
6. Nonmetallic cabinets shall be listed and labeled as defined in NFPA 70, by a qualified testing agency, and marked for intended location and application.

2.6 HANDHOLES AND BOXES FOR EXTERIOR UNDERGROUND WIRING

A. General Requirements for Handholes and Boxes:
   1. Boxes and handholes for use in underground systems shall be designed and identified as defined in NFPA 70, for intended location and application.
   2. Boxes installed in wet areas shall be listed and labeled as defined in NFPA 70, by a qualified testing agency, and marked for intended location and application.

B. Polymer-Concrete Handholes and Boxes with Polymer-Concrete Cover: Molded of sand and aggregate, bound together with polymer resin, and reinforced with steel, fiberglass, or a combination of the two.
   1. Manufacturers: Subject to compliance with requirements, provide products by one of the following:
      a. Jensen Precast Inc.
      b. CDR Systems Corporation; Hubbell Power Systems.
      c. Oldcastle Precast, Inc.; Christy Concrete Products.
      d. Synertech Moulded Products; a division of Oldcastle Precast, Inc.
   2. Standard: Comply with SCTE 77.
   3. First option in "Configuration" Subparagraph below facilitates bottom conduit entry. Second option may be provided by a separate slab placed in the excavation under an open-bottom enclosure; third option is obtained by molding or fabricating the bottom integrally with the body of unit.
   4. Configuration: Designed for flush burial with open bottom unless otherwise indicated.
   5. Cover: Weatherproof, secured by tamper-resistant locking devices and having structural load rating consistent with enclosure and handhole location.
   6. Cover Finish: Nonskid finish shall have a minimum coefficient of friction of 0.50.
   7. Cover Legend: Molded lettering, "ELECTRIC.". Boxes containing conductors and cables over 600V, the cover shall include permanently engraved name of the utility company (e.g SBVC), type of utility (e.g. ELECTRIC), DANGER-HIGH VOLTAGE-KEEP OUT” in minimum 1/2" inch size, block letters.
   8. Retain "Conduit Entrance Provisions" Subparagraph below if conduit enters enclosure through the side. Otherwise, entry is made through an open bottom or through side openings cut in the field, as specified in "Installation of Underground Handholes and Boxes" Article. Coordinate with Drawings.
   9. Conduit Entrance Provisions: Conduit-terminating fittings shall mate with entering ducts for secure, fixed installation in enclosure wall.
   10. Handholes 12 Inches Wide by 24 Inches Long and Larger: Have inserts for cable racks and pulling-in irons installed before concrete is poured.

2.7 SOURCE QUALITY CONTROL FOR UNDERGROUND ENCLOSURES

A. Handhole and Pull-Box Prototype Test: Test prototypes of handholes and boxes for compliance with SCTE 77. Strength tests shall be for specified tier ratings of products supplied.
   1. Tests of materials shall be performed by an independent testing agency.
   2. Strength tests of complete boxes and covers shall be by either an independent testing agency or manufacturer. A qualified registered professional engineer shall certify tests by manufacturer.
   3. Testing machine pressure gages shall have current calibration certification complying with ISO 9000 and ISO 10012 and traceable to NIST standards.

PART 3 - EXECUTION

3.1 RACEWAY APPLICATION

A. Outdoors: Apply raceway products as specified below unless otherwise indicated:
   1. Exposed Conduit: GRC.
   2. Concealed Conduit, Aboveground: GRC. Use EPC-40PVC inside concrete walls and columns only.
   3. Underground Conduit:
      a. Type EPC-40-PVC and Type EPC-80-PVC, concrete encased, unless otherwise indicated for electrical cables over 600V.
      b. Type EPC-40-PVC and Type EPC-80-PVC, direct burial, unless otherwise indicated for electrical cables 600V and less.
   4. Connection to Vibrating Equipment (Including Transformers and Hydraulic, Pneumatic, Electric Solenoid, or Motor-Driven Equipment): LFMC.
   5. Boxes and Enclosures, Aboveground: NEMA 250, Type 3R/4.

B. Indoors: Apply raceway products as specified below unless otherwise indicated:
   1. Exposed, Not Subject to Physical Damage: EMT or GRC.
   2. Exposed, Not Subject to Severe Physical Damage: GRC identified for such use.
   3. Exposed and Subject to Severe Physical Damage: GRC. Raceway locations include the following:
      a. Loading dock.
      b. Corridors used for traffic of mechanized carts, forklifts, and pallet-handling units.
      c. Mechanical rooms.
      d. Gymnasiums.
   4. Concealed in Ceilings and Interior Walls and Partitions: EMT.
   5. Concealed in concrete walls and columns: RNC Type EPC-40-PVC.
   6. Connection to Vibrating Equipment (Including Transformers and Hydraulic, Pneumatic, Electric Solenoid, or Motor-Driven Equipment): FMC, except use LFMC in damp or wet locations.
   7. Damp or Wet Locations: GRC.
   8. Boxes and Enclosures: NEMA 250, Type 1, except use NEMA 250, Type 4 stainless steel in institutional and commercial kitchens and damp or wet locations.

C. Minimum Raceway Size: 3/4-inch trade size.

D. Raceway Fittings: Compatible with raceways and suitable for use and location.
   1. Rigid and Intermediate Steel Conduit: Use threaded rigid steel conduit fittings unless otherwise indicated. Comply with NEMA FB 2.10.
   2. PVC Externally Coated, Rigid Steel Conduits: Use only fittings listed for use with this type of conduit. Patch and seal all joints, nicks, and scrapes in PVC coating after installing conduits and fittings. Use sealant recommended by fitting manufacturer and apply in thickness and number of coats recommended by manufacturer.
   3. EMT: Use compression, steel fittings. Comply with NEMA FB 2.10.
   4. Flexible Conduit: Use only fittings listed for use with flexible conduit. Comply with NEMA FB 2.20.

E. Install nonferrous conduit or tubing for circuits operating above 60 Hz. Where aluminum raceways are installed for such circuits and pass through concrete, install in nonmetallic sleeve.

F. Do not install aluminum conduits, boxes, or fittings in contact with concrete or earth.

G. Coordinate first paragraph below with Drawings.

H. Install surface raceways only where indicated on Drawings.

I. Do not install nonmetallic conduit where ambient temperature exceeds 120 deg F.

3.2 INSTALLATION

A. Comply with NECA 1 and NECA 101 for installation requirements except where requirements on Drawings or in this article are stricter. Comply with NECA 102 for aluminum conduits. Comply with NFPA 70 limitations for types of raceways allowed in specific occupancies and number of floors.

B. Keep raceways at least 6 inches away from parallel runs of flues and steam or hot-water pipes. Install horizontal raceway runs above water and steam piping.

C. Complete raceway installation before starting conductor installation.

D. Comply with requirements in Section 260529 "Hangers and Supports for Electrical Systems" for hangers and supports.

E. Arrange stub-ups so curved portions of bends are not visible above finished slab.

F. Install no more than the equivalent of three 90-degree bends in any conduit run except for control wiring conduits, for which fewer bends are allowed. Support within 12 inches of changes in direction.

G. Conceal conduit and EMT within finished walls, ceilings, and floors unless otherwise indicated. Install conduits parallel or perpendicular to building lines.

H. Support conduit within 12 inchesof enclosures to which attached.

I. Raceways Embedded in Slabs:

1. Run conduit larger than 1-inch trade size, parallel or at right angles to main reinforcement. Where at right angles to reinforcement, place conduit close to slab support. Secure raceways to reinforcement at maximum 10-footintervals.
2. Arrange raceways to cross building expansion joints at right angles with expansion fittings.
3. Arrange raceways to keep a minimum of 2 inches of concrete cover in all directions.
4. Do not embed threadless fittings in concrete unless specifically approved by Architect for each specific location.
5. Some authorities having jurisdiction may not permit nonmetallic tubing in fire-rated slabs in subparagraph below.
6. Change from ENT to GRC before rising above floor.

J. Stub-ups to Above Recessed Ceilings:
1. Use EMT, IMC, or RMC for raceways.
2. Use a conduit bushing or insulated fitting to terminate stub-ups not terminated in hubs or in an enclosure.

K. Threaded Conduit Joints, Exposed to Wet, Damp, Corrosive, or Outdoor Conditions: Apply listed compound to threads of raceway and fittings before making up joints. Follow compound manufacturer's written instructions.

L. PVC Externally Coated, Rigid Steel Conduits: Use only fittings listed for use with this type of conduit. Patch and seal all joints, nicks, and scrapes with PVC touch-up compound after installing conduits and fittings. Use sealant recommended by fitting manufacturer and apply in thickness and number of coats recommended by manufacturer. Coat field-cut threads on PVC-coated raceway with a corrosion-preventing conductive compound prior to assembly. All installers shall be certified by the manufacturer and be able to present a valid unexpired installer certification card prior to installation beginning.

~~L.~~M. Raceway Terminations at Locations Subject to Moisture or Vibration: Use insulating bushings to protect conductors including conductors smaller than No. 4 AWG.

~~M.~~N. Terminate threaded conduits into threaded hubs or with locknuts on inside and outside of boxes or cabinets. Install bushings on conduits up to 1-1/4-inch trade size and insulated throat metal bushings on 1-1/2-inch trade size and larger conduits terminated with locknuts. Install insulated throat metal grounding bushings on service conduits.

~~N.~~O. Install raceways square to the enclosure and terminate at enclosures with locknuts. Install locknuts hand tight plus 1/4 turn more.

~~O.~~P. Do not rely on locknuts to penetrate nonconductive coatings on enclosures. Remove coatings in the locknut area prior to assembling conduit to enclosure to assure a continuous ground path.

~~P.~~Q. Cut conduit perpendicular to the length. For conduits 2-inch trade size and larger, use roll cutter or a guide to make cut straight and perpendicular to the length.

~~Q.~~R. Install pull wires in empty raceways. Use polypropylene or monofilament plastic line with not less than ~~200 lb~~ 250lbs (113 kgs) tensile strength. Leave at least 12 inches of slack at each end of pull wire. Provide acrylic identification tags (2”X4”) at each end indicating the source. Cap underground raceways designated as spare above grade alongside raceways in use.

~~R.~~S. Surface Raceways:
1. Install surface raceway with a minimum 2-inchradius control at bend points.
2. Secure surface raceway with screws or other anchor-type devices at intervals not exceeding 48 inches and with no less than two supports per straight raceway section. Support surface raceway according to manufacturer's written instructions. Tape and glue are not acceptable support methods.

~~S.~~T. Install raceway sealing fittings at accessible locations according to NFPA 70 and fill them with listed sealing compound. For concealed raceways, install each fitting in a flush steel box with a blank cover plate having a finish similar to that of adjacent plates or surfaces. Install raceway sealing fittings according to NFPA 70.

~~T.~~U. Install devices to seal raceway interiors at accessible locations. Locate seals so no fittings or boxes are between the seal and the following changes of environments. Seal the interior of all raceways at the following points:
1. Where conduits pass from warm to cold locations, such as boundaries of refrigerated spaces.
2. Where an underground service raceway enters a building or structure.
3. Where otherwise required by NFPA 70.

~~U.~~V. Comply with manufacturer's written instructions for solvent welding RNC and fittings.

~~V.~~W. Expansion-Joint Fittings:
1. Install in each run of aboveground RNC that is located where environmental temperature change may exceed 30 deg F and that has straight-run length that exceeds 25 feet. Install in each run of aboveground RMC[**and EMT**] conduit that is located where environmental temperature change may exceed 100 deg F and that has straight-run length that exceeds 100 feet.
2. Install type and quantity of fittings that accommodate temperature change listed for each of the following locations:
   a. Outdoor Locations Not Exposed to Direct Sunlight: 125 deg F temperature change.
   b. Outdoor Locations Exposed to Direct Sunlight: 155 deg F temperature change.
   c. Indoor Spaces Connected with Outdoors without Physical Separation: 125 deg F temperature change.
3. Install fitting(s) that provide expansion and contraction for at least 0.00041 inch per foot of length of straight run per deg F of temperature change for PVC conduits. Install fitting(s) that provide expansion and contraction for at least 0.000078 inch per foot of length of straight run per deg F of temperature change for metal conduits.
4. Install expansion fittings at all locations where conduits cross building or structure expansion joints.
5. Install each expansion-joint fitting with position, mounting, and piston setting selected according to manufacturer's written instructions for conditions at specific location at time of installation. Install conduit supports to allow for expansion movement.

~~W.~~X. Flexible Conduit Connections: Comply with NEMA RV 3. Use a maximum of 72 inches of flexible conduit for recessed and semirecessed luminaires, equipment subject to vibration, noise transmission, or movement; and for transformers and motors.
1. Use LFMC in damp or wet locations subject to severe physical damage.
2. Use LFMC or LFNC in damp or wet locations not subject to severe physical damage.

~~X.~~Y. Mount boxes at heights indicated on Drawings. If mounting heights of boxes are not individually indicated, give priority to ADA requirements. Install boxes with height measured to bottom of box unless otherwise indicated.

~~Y.~~Z. Recessed Boxes in Masonry Walls: Saw-cut opening for box in center of cell of masonry block, and install box flush with surface of wall. Prepare block surfaces to provide a flat surface for a raintight connection between box and cover plate or supported equipment and box.

~~Z.~~AA. Horizontally separate boxes mounted on opposite sides of walls so they are not in the same vertical channel.

~~AA.~~BB. Locate boxes so that cover or plate will not span different building finishes.

~~BB.~~CC. Support boxes of three gangs or more from more than one side by spanning two framing members or mounting on brackets specifically designed for the purpose.

~~CC.~~DD. Fasten junction and pull boxes to or support from building structure. Do not support boxes by conduits.

~~DD.~~EE. Set metal floor boxes level and flush with finished floor surface.

~~EE.~~FF. Set nonmetallic floor boxes level. Trim after installation to fit flush with finished floor surface.

3.3 INSTALLATION OF UNDERGROUND CONDUIT

A. Direct-Buried Conduit:
   1. Excavate trench bottom to provide firm and uniform support for conduit. Prepare trench bottom as specified in Section 312000 "Earth Moving" for pipe less than 6 inches in nominal diameter.
   2. Install backfill as specified in Section 312000 "Earth Moving."
   3. After installing conduit, backfill and compact. Start at tie-in point, and work toward end of conduit run, leaving conduit at end of run free to move with expansion and contraction as temperature changes during this process. Firmly hand tamp backfill around conduit to provide maximum supporting strength. After placing controlled backfill to within 12 inches of finished grade, make final conduit connection at end of run and complete backfilling with normal compaction as specified in Section 312000 "Earth Moving."
   4. Install manufactured duct elbows for stub-ups at poles and equipment and at building entrances through floor unless otherwise indicated. Encase elbows for stub-up ducts throughout length of elbow.
   5. Install manufactured rigid steel conduit elbows for stub-ups at poles and equipment and at building entrances through floor.
      a. Couple steel conduits to ducts with adapters designed for this purpose, and encase coupling with 3 inches of concrete for a minimum of 12 inches on each side of the coupling.
      b. For stub-ups at equipment mounted on outdoor concrete bases and where conduits penetrate building foundations, extend steel conduit horizontally a minimum of 60 inches from edge of foundation or equipment base. Install insulated grounding bushings on terminations at equipment.

6. Warning Planks: Bury warning planks approximately 12 inches above direct-buried conduits but a minimum of 6 inches below grade. Align planks along centerline of conduit.
7. Underground Warning Tape: Comply with requirements in Section 260553 "Identification for Electrical Systems."

3.4 INSTALLATION OF UNDERGROUND HANDHOLES AND BOXES

A. Install handholes and boxes level and plumb and with orientation and depth coordinated with connecting conduits to minimize bends and deflections required for proper entrances. Top of conduits inside the handhole/box shall be minimum **[4** inches above the bottom of the handhole/box.

B. Unless otherwise indicated, support units on a level bed of crushed stone or gravel (minimum 6 inch high), graded from 1/2-inch sieve to No. 4 sieve and compacted to same density as adjacent undisturbed earth.

C. Elevation: In paved areas, set so cover surface will be flush with finished grade. Set covers of other enclosures 1 inch above finished grade.

D. Install removable hardware, including pulling eyes, cable stanchions, cable arms, and insulators, as required for installation and support of cables and conductors and as indicated. Select arm lengths to be long enough to provide spare space for future cables but short enough to preserve adequate working clearances in enclosure.

E. Field-cut openings for conduits according to enclosure manufacturer's written instructions. Cut wall of enclosure with a tool designed for material to be cut. Size holes for terminating fittings to be used, and seal around penetrations after fittings are installed.

3.5 SLEEVE AND SLEEVE-SEAL INSTALLATION FOR ELECTRICAL PENETRATIONS

A. Install sleeves and sleeve seals at penetrations of exterior floor and wall assemblies. Comply with requirements in Section 260544 "Sleeves and Sleeve Seals for Electrical Raceways and Cabling."

3.6 FIRESTOPPING

A. Install firestopping at penetrations of fire-rated floor and wall assemblies. Comply with requirements in Section 078413 "Penetration Firestopping."

3.7 PROTECTION

A. Protect coatings, finishes, and cabinets from damage and deterioration.
   1. Repair damage to galvanized finishes with zinc-rich paint recommended by manufacturer.

2. Repair damage to PVC coatings or paint finishes with matching touchup coating recommended by manufacturer.

END OF SECTION 260533

SECTION 260543 - UNDERGROUND DUCTS AND RACEWAYS FOR ELECTRICAL SYSTEMS

PART 1 - GENERAL

1.1 RELATED DOCUMENTS

A. Drawings and general provisions of the Contract, including General and Supplementary Conditions and Division 01 Specification Sections, apply to this Section.

1.2 SUMMARY

A. This Section includes the following:
   1. Conduit, ducts, and duct accessories for direct-buried and concrete-encased duct bank(s)
   2. Handholes and boxes.
   3. Manholes.

B. Related Requirements:
   1. Section 260526 “Grounding and Bonding of Electrical Systems”.

1.3 DEFINITION

A. RNC: Rigid nonmetallic conduit.

B. PVC coated GRS: PVC coated Galvanized rigid steel conduit

C. PVC: Poly Vinyl Chloride

D. NETA: InterNational Testing Association

1.4 ACTION SUBMITTALS

A. Product Data: For the following:
   1. Duct-bank materials, including separators and miscellaneous components.
   2. Ducts and conduits and their accessories, including elbows, end bells, bends, fittings, and solvent cement.
   3. Accessories for manholes, handholes, boxes**,** and other utility structures.
   4. Warning tape.
   5. Warning planks.
   6. Pull ropes.

B. Shop Drawings for Precast or Factory-Fabricated Underground Utility Structures: Include plans, elevations, sections, details, attachments to other work, and accessories, including the following:
   1. Duct entry provisions, including locations and duct sizes.
   2. Reinforcement details.

3. Frame and cover design and manhole frame support rings.
4. Ladder details.
5. Grounding details.
6. Cable racks, insert. Include dimensioned locations of cable rack inserts, pulling-in and lifting irons, and sumps.
7. Joint details.

C. Shop Drawings for Factory-Fabricated Manholes, Handholes and Boxes Other Than Precast Concrete: Include dimensioned plans, sections, and elevations, and fabrication and installation details, including the following:
1. Duct entry provisions, including locations and duct sizes.
2. Cover design. Include details of factory engraved markings as specified.
3. Grounding details.
4. Cable racks, inserts. Include dimensioned locations of cable rack inserts, and pulling-in and lifting irons.

1.5 INFORMATIONAL SUBMITTALS

A. Duct-Bank Coordination Drawings: Show duct profiles and coordination with other utilities and underground structures.
1. Include plans and sections, drawn to scale, and show bends and locations of expansion fittings.
2. Drawings shall be signed and sealed by a qualified California registered professional electrical engineer.

B. Product Certificates: For concrete and steel used in precast concrete manholes and handholes, as required by ASTM C 858. Certificates shall be signed by manufacturer's structural engineer. Include name and date.

C. Qualification Data: For professional engineer and testing agency.

D. Source quality-control test reports.

E. Field quality-control test reports.

1.6 QUALITY ASSURANCE

A. Testing Agency Qualifications: Qualified according to ASTM E 329 for testing indicated.

B. Comply with ANSI C2.

C. Comply with NFPA 70.

D. Each conduit shall bear manufacturer's trademark and UL label. Conduits and fittings shall be of a single manufacturer. Multiple manufactures for the same material are not acceptable.

E. Comply with California Electric Code (CEC).

1.7 DELIVERY, STORAGE, AND HANDLING

A. Deliver ducts to project site with ends capped. Store nonmetallic ducts with supports to prevent bending, warping, and deforming.

B. Deliver precast concrete manholes, handholes and other underground utility structures when the site is ready for installation. Store precast concrete and other factory-fabricated underground utility structures at project site (if necessary) as recommended by manufacturer to prevent physical damage. Arrange so identification markings are visible.

C. Lift and support precast concrete units only at designated lifting or supporting points.

1.8 COORDINATION

A. Coordinate layout and installation of ducts, manholes, handholes, and boxes with final arrangement of other utilities, site grading, and surface features as determined in the field.

B. Coordinate elevations of ducts and duct-bank entrances into manholes, handholes, and boxes with final locations and profiles of ducts and duct banks as determined by coordination with other utilities, underground obstructions, and surface features. Revise locations and elevations from those indicated as required to suit field conditions and to ensure that duct runs drain to manholes and handholes, and as approved by Architect.

1.9 EXTRA MATERIALS

A. Furnish extra materials described below that match products installed and that are packaged with protective covering for storage and identified with labels describing contents.

B. Furnish cable-support stanchions, arms, insulators, and associated fasteners in quantities equal to 5 percent of quantity of each item installed (minimum six of each type).

PART 2 - PRODUCTS

2.1 CONDUIT

A. Plastic-Coated Rigid Steel Conduit: Galvanized. Comply with ANSI C80.1. Plastic-Coated Rigid Steel Conduit and Fittings: Rigid steel conduit and fittings with an extruded polyvinyl chloride jacket, minimum 40 mils. The jacket shall have high tensile strength, shall be highly resistant to corrosion and shall not oxidize or deteriorate or shrink when exposed to sunlight and weather. The jacket shall be flame retardant and shall not support combustion. The interior of the conduit shall have a urethane coating, minimum 2 mils.

B. Manufacturers: Subject to compliance with requirements, provide products by one of the following:
   1. Allied Tube and Conduit
   2. Republic Conduit

3. Western Tube

C. RNC: Heavy wall design; NEMA TC 2, Type EPC-40-PVC, UL 651, with matching fittings by same manufacturer as the conduit, complying with NEMA TC 3 and UL 514B. Make all fittings watertight with solvent-weld recommended by the conduit manufacturer and specifically manufactured for the purpose.

D. Manufacturers: Subject to compliance with requirements, provide products by one of the following:
1. Cantex, Inc.
2. Thomas & Betts-Carlon
3. Lamson & Sessions -Carlon Division
4. JM Eagle
5. Allied Tube and Conduit

2.2 NONMETALLIC DUCTS AND DUCT ACCESSORIES

A. Manufacturers: Subject to compliance with requirements, provide products by one of the following:
1. Allied Tube and Conduit
2. Cantex, Inc.
3. Lamson & Sessions; Carlon Electrical Products.
4. JM Eagle

B. Duct Accessories:
1. Duct Separators: Factory-fabricated rigid PVC interlocking spacers, sized for type and sizes of ducts with which used, and selected to provide minimum duct spacings indicated while supporting ducts during concreting or backfilling.
2. Warning Tape: Underground-line warning tape specified in Section 260553 "Identification for Electrical Systems."

2.3 PRECAST CONCRETE HANDHOLES AND BOXES

A. Available Manufacturers: Subject to compliance with requirements, manufacturers offering products that may be incorporated into the Work include, but are not limited to, the following:

B. Manufacturers: Subject to compliance with requirements, provide products by one of the following:
1. Christy Concrete Products.
2. Oldcastle Precast Group.
3. Jensen Precast.

C. Comply with ASTM C 858 for design and manufacturing processes.

D. Description: Factory-fabricated, reinforced-concrete, monolithically poured walls and bottom unless open-bottom enclosures are indicated. Frame and cover shall form top of enclosure and shall have traffic load rating consistent with that of handhole or box.

1. Frame and Cover: Weatherproof cast-iron frame, with cast-iron cover with recessed cover hook eyes and tamper-resistant, captive, cover-securing bolts.
2. Frame and Cover: Weatherproof steel frame, with steel cover with recessed cover hook eyes and tamper-resistant, captive, cover-securing bolts.
3. Frame and Cover: Weatherproof steel frame, with hinged steel access door assembly with tamper-resistant, captive, cover-securing bolts.
   a. Cover Hinges: Concealed, with hold-open ratchet assembly.
   b. Cover Handle: Recessed.
4. Frame and Cover: Weatherproof aluminum frame with hinged aluminum access door assembly with tamper-resistant, captive, cover-securing bolts.
   a. Cover Hinges: Concealed, with hold-open ratchet assembly.
   b. Cover Handle: Recessed.
5. Cover Finish: Nonskid finish shall have a minimum coefficient of friction of 0.50.
6. Cover Legend: Molded lettering,[NAME OF SERVING UTILITY COMPANY] ["ELECTRIC."] ["TELEPHONE."] “[GROUNDING]”[As indicated for each service.] <Insert legend.>
7. Configuration: Units shall be designed for flush burial and have integral closed bottom, unless otherwise indicated.
8. Extensions and Slabs: Designed to mate with bottom of enclosure. Same material as enclosure.
   a. Extension shall provide increased depth of 12 inches (300 mm).
   b. Slab: Same dimensions as bottom of enclosure, and arranged to provide closure.
9. Windows: Precast openings in walls, arranged to match dimensions and elevations of approaching ducts and duct banks plus an additional 12 inches (300 mm) vertically and horizontally to accommodate alignment variations.
   a. Windows shall be located no less than 6 inches (150 mm) from interior surfaces of walls, floors, or frames and covers of handholes, but close enough to corners to facilitate racking of cables on walls.
   b. Window opening shall have cast-in-place, welded wire fabric reinforcement for field cutting and bending to tie in to concrete envelopes of duct banks.
   c. Window openings shall be framed with at least two additional No. 4 steel reinforcing bars in concrete around each opening.
10. Duct Entrances in Handhole Walls: Cast end-bell or duct-terminating fitting in wall for each entering duct.
    a. Type and size shall match fittings to duct or conduit to be terminated.
    b. Fittings shall align with elevations of approaching ducts and be located near interior corners of handholes to facilitate racking of cable.
11. Handholes 12 inches wide by 24 inches long (300 mm wide by 600 mm long) and larger shall have inserts for cable racks and pulling-in irons installed before concrete is poured.

2.4 PRECAST MANHOLES

A. Manufacturers: Subject to compliance with requirements, provide products by one of the following:
   1. Christy Concrete Products.
   2. Oldcastle Precast Group.
   3. Utility Concrete Products, LLC.
   4. Jensen Precast
   5. Utility Vault Co.

B. Comply with ASTM C 858, with structural design loading as specified in Part 3 "Underground Enclosure Application" Article and with interlocking mating sections, complete with accessories, hardware, and features.
   1. Windows: Precast openings in walls, arranged to match dimensions and elevations of approaching ducts and duct banks plus an additional 12 inches (300 mm) vertically and horizontally to accommodate alignment variations.
      a. Windows shall be located no less than 6 inches (150 mm) or from interior surfaces of walls, floors, or roofs of manholes, but close enough to corners to facilitate racking of cables on walls. **Windows shall be no less than 12 inches (300 mm) from the floor to avoid water intrusion into the underground ducts.**
      b. Window opening shall have cast-in-place, welded wire fabric reinforcement for field cutting and bending to tie in to concrete envelopes of duct banks.
      c. Window openings shall be framed with at least two additional No. 4 steel reinforcing bars in concrete around each opening.
   2. Duct Entrances in Manhole Walls: Cast end-bell or duct-terminating fitting in wall for each entering duct.
      a. Type and size shall match fittings to duct or conduit to be terminated.
      b. Fittings shall align with elevations of approaching ducts and be located near interior corners of manholes to facilitate racking of cable.

C. Concrete Knockout Panels: 1-1/2 to 2 inches (38 to 50 mm) thick, for future conduit entrance and sleeve for ground rod.

D. Joint Sealant: Asphaltic-butyl material with adhesion, cohesion, flexibility, and durability properties necessary to withstand maximum hydrostatic pressures at the installation location with the ground-water level at grade.

2.5 CAST-IN-PLACE MANHOLES

A. Description: Underground utility structures, constructed in place, complete with accessories, hardware, and features. Include concrete knockout panels for conduit entrance and sleeve for ground rod.

B. Materials: Comply with ASTM C 858 and with Section 033000 "Cast-in-Place Concrete."

C. Structural Design Loading: As specified in Part 3 "Underground Enclosure Application" Article.

2.6 UTILITY STRUCTURE ACCESSORIES

A. Manufacturers: Subject to compliance with requirements, provide products by one of the following:
   1. Bilco Company (The).
   2. Christy Concrete Products.
   3. Jensen Precast
   4. Neenah Foundry Company.
   5. Oldcastle Precast Group.
   6. Underground Devices, Inc.
   7. Utility Concrete Products, LLC.

B. Manhole Frames, Covers, and Chimney Components: Comply with structural design loading specified for manhole.
   1. Frame and Cover: Weatherproof, [gray cast iron complying with ASTM A 48/A 48M, Class 30B] [~~cast aluminum] with milled cover-to-frame bearing surfaces; diameter, [**26 inches (660 mm)**]~~ [**29 inches (737 mm)**].
      a. Cover Finish: Nonskid finish shall have a minimum coefficient of friction of 0.50.
      b. Special Covers: Recess in face of cover designed to accept finish material in paved areas.
   2. Cover Legend: Cast in. Selected to suit system.
      a. Legend: "ELECTRIC-LV" for duct systems with power wires and cables for systems operating at 600 V and less.
      b. Legend: “Name of serving utility company”; "ELECTRIC-HV"; “Manhole/Handhole number as indicated on the drawings” for duct systems with medium-voltage cables.
      c. Legend: “Name of serving utility company”; "SIGNAL"; “Manhole/Handhole number as indicated on the drawings” for communications, data, and telephone duct systems.
   3. Manhole Chimney Components: Precast concrete rings with dimensions matched to those of roof opening.
      a. Mortar for Chimney Ring and Frame and Cover Joints: Comply with ASTM C 270, Type M, except for quantities less than 2.0 cu. ft. (60 L) where packaged mix complying with ASTM C 387, Type M, may be used.

C. Manhole Sump Frame and Grate: ASTM A 48/A 48M, Class 30B, gray cast iron.

D. Pulling Eyes in Concrete Walls: Eyebolt with reinforcing-bar fastening insert, 2-inch- (50-mm-) diameter eye, and 1-by-4-inch (25-by-100-mm) bolt.
   1. Working Load Embedded in 6-Inch (150-mm), 4000-psi (27.6-MPa) Concrete: 13,000-lbf (58-kN) minimum tension.

E. Pulling Eyes in Nonconcrete Walls: Eyebolt with reinforced fastening, 1-1/4-inch- (32-mm-) diameter eye, rated **2500-lbf (11-kN)** minimum tension.

F. Pulling-In and Lifting Irons in Concrete Floors: 7/8-inch- (22-mm-) diameter, hot-dip galvanized, bent steel rod; stress relieved after forming; and fastened to reinforcing rod. Exposed triangular opening.
   1. Ultimate Yield Strength: 40,000-lbf (180-kN) shear and 60,000-lbf (270-kN) tension.

G. Bolting Inserts for Concrete Utility Structure Cable Racks and Other Attachments: Flared, threaded inserts of noncorrosive, chemical-resistant, nonconductive thermoplastic material; 1/2-inch (13-mm) ID by 2-3/4 inches (69 mm) deep, flared to 1-1/4 inches (32 mm) minimum at base.
   1. Tested Ultimate Pullout Strength: 12,000 lbf (53 kN) minimum.

H. Expansion Anchors for Installation after Concrete Is Cast: Zinc-plated, carbon-steel-wedge type with stainless-steel expander clip with 1/2-inch (13-mm) bolt, 5300-lbf (24-kN) rated pullout strength, and minimum 6800-lbf (30-kN) rated shear strength.

I. Cable Rack Assembly: Steel, [**hot-rolled**] [**hot-dip**] galvanized, except insulators.
   1. Stanchions: T-section or channel; 2-1/4-inch (57-mm) nominal size; punched with 14 holes on 1-1/2-inch (38-mm) centers for cable-arm attachment.
   2. Arms: 1-1/2 inches (38 mm) wide, lengths ranging from 3 inches (75 mm) with 450-lb (204-kg) minimum capacity to 18 inches (460 mm) with 250-lb (114-kg) minimum capacity. Arms shall have slots along full length for cable ties and be arranged for secure mounting in horizontal position at any vertical location on stanchions.
   3. Insulators: High-glaze, wet-process porcelain arranged for mounting on cable arms.

J. Cable Rack Assembly: Nonmetallic. Components fabricated from nonconductive, fiberglass-reinforced polymer.
   1. Stanchions: Nominal 36 inches (900 mm) high by 4 inches (100 mm) wide, with minimum of 9 holes for arm attachment.
   2. Arms: Arranged for secure, drop-in attachment in horizontal position at any location on cable stanchions, and capable of being locked in position. Arms shall be available in lengths ranging from 3 inches (75 mm) with 450-lb (204-kg) minimum capacity to 20 inches (508 mm) with 250-lb (114-kg) minimum capacity. Top of arm shall be nominally 4 inches (100 mm) wide, and arm shall have slots along full length for cable ties.

K. Duct-Sealing Compound: Nonhardening, safe for contact with human skin, not deleterious to cable insulation, and workable at temperatures as low as 35 deg F (2 deg C). Capable of withstanding temperature of 300 deg F (150 deg C) without slump and adhering to clean surfaces of plastic ducts, metallic conduits, conduit coatings, concrete, masonry, lead, cable sheaths, cable jackets, insulation materials, and common metals.

L. Fixed Manhole Ladders: Arranged for attachment to [**roof**] [**or**] [**wall**] [**and floor**] of manhole. Ladder and mounting brackets and braces shall be fabricated from [**nonconductive, structural-grade,** ~~**fiberglass-reinforced resin**~~] [**hot-dip galvanized steel**]. Ladder shall be removable if necessary.

~~M. Portable Manhole Ladders: UL-listed, heavy-duty [**wood**] [**fiberglass**] specifically designed for portable use for access to electrical manholes. Minimum length equal to distance from deepest manhole floor to grade plus 36 inches (900 mm). [**One**] <**Insert quantity**> required.~~

N. Cover Hooks: [**Heavy duty, designed for lifts 60 lbf (270 N) and greater**] [~~**Light duty, designed for lifts less than 60 lbf (270 N)**~~]. [**Two**] required.

2.7 SOURCE QUALITY CONTROL

A. Test and inspect precast concrete utility structures according to ASTM C 1037.

B. Nonconcrete Handhole and Pull-Box Prototype Test: Test prototypes of manholes and boxes for compliance with SCTE 77. Strength tests shall be for specified tier ratings of products supplied.
   1. Tests of materials shall be performed by a independent testing agency.
   2. Strength tests of complete boxes and covers shall be by either an independent testing agency or the manufacturer. A qualified registered professional engineer shall certify tests by manufacturer.

3. Testing machine pressure gages shall have current calibration certification complying with ISO 9000 and ISO 10012, and traceable to NIST standards.

PART 3 - EXECUTION

3.1 UNDERGROUND DUCT APPLICATION

A. Ducts for Electrical Cables Over 600 V: RNC, NEMA Type EPC-40-PVC, in concrete-encased duct bank, unless otherwise indicated.

B. Ducts for Electrical Feeders 600 V and Less: RNC, NEMA Type EPC-40-PVC, in direct-buried duct bank, unless otherwise indicated.

C. Ducts for Electrical Branch Circuits: RNC, NEMA Type EPC-40-PVC, in direct-buried duct bank, unless otherwise indicated.

D. Underground Ducts for Telephone, Communications, or Data Utility Service Cables: RNC, NEMA Type EPC-40-PVC, in concrete-encased duct bank, unless otherwise indicated.

E. Underground Ducts for Telephone, Communications, or Data Utility Service Cables: RNC, NEMA Type EPC-40-PVC, installed in direct-buried duct bank, unless otherwise indicated.

F. Retain one of two paragraphs below for on-site underground telecommunications distribution. Edit to suit Project. See Evaluations.

G. Underground Ducts Crossing Paved Paths Walks and Driveways: RNC, NEMA Type EPC-40-PVC, in concrete-encased duct bank, unless otherwise indicated.

3.2 UNDERGROUND ENCLOSURE APPLICATION

A. Handholes and Boxes for 600 V and Less, Including Telephone, Communications, and Data Wiring:
   1. Units in Roadways and Other Deliberate Traffic Paths: Precast concrete. AASHTO HB 17, H-20 structural load rating.
   2. Units in Driveway, Parking Lot, and Off-Roadway Locations, Subject to Occasional, Nondeliberate Loading by Heavy Vehicles: Precast concrete, AASHTO HB 17, H-20 structural load rating.
   3. Units in Sidewalk and Similar Applications with a Safety Factor for Nondeliberate Loading by Vehicles: Precast concrete, AASHTO HB 17, H-20 structural load rating.
   4. Units Subject to Light-Duty Pedestrian Traffic Only: Fiberglass-reinforced polyester resin, structurally tested according to SCTE 77 with 3000-lbf (13 345-N) vertical loading.

B. Manholes: Precast concrete.
   1. Units Located in Roadways and Other Deliberate Traffic Paths by Heavy or Medium Vehicles: H-20 structural load rating according to AASHTO HB 17.

3.3 EARTHWORK

A. Excavation and Backfill: Comply with Section 312000 "Earth Moving," but do not use heavy-duty, hydraulic-operated, compaction equipment.

B. Restore surface features at areas disturbed by excavation and reestablish original grades, unless otherwise indicated. Replace removed sod immediately after backfilling is completed.

C. Restore areas disturbed by trenching, storing of dirt, cable laying, and other work. Restore vegetation and include necessary topsoiling, fertilizing, liming, seeding, sodding, sprigging, and mulching. Comply with Section 329200 "Turf and Grasses" and Section 329300 "Plants."

D. Cut and patch existing pavement in the path of underground ducts and utility structures according to Section 017329 "Cutting and Patching."

3.4 DUCT INSTALLATION

A. Slope: Pitch ducts a minimum slope of 1:300 down toward manholes and handholes and away from buildings and equipment. Slope ducts from a high point in runs between two manholes to drain in both directions.

B. Curves and Bends: Use 5-degree angle couplings for small changes in direction. Use manufactured long sweep bends with a minimum radius of 48 inches (1220 mm) 12.5 feet (4 m), both horizontally and vertically, at other locations, unless otherwise indicated. For underground ducts containing MV and HV cables, use manufactured long sweep bends with a minimum radius 25 feet (7.5 m) both horizontally and vertically. Number of bends on ducts for HV and MV systems, telephone and signal systems shall not exceed two (2) 90 degrees.

C. Joints: Use solvent-cemented joints in ducts and fittings and make watertight according to manufacturer's written instructions. Stagger couplings so those of adjacent ducts do not lie in same plane.

D. Duct Entrances to Manholes and Concrete and Polymer Concrete Handholes: Use end bells, spaced approximately 10 inches (250 mm) o.c. for 5-inch (125-mm) ducts, and vary proportionately for other duct sizes.
   1. Begin change from regular spacing to end-bell spacing 10 feet (3 m) from the end bell without reducing duct line slope and without forming a trap in the line.
   2. Direct-Buried Duct Banks: Install an expansion and deflection fitting in each conduit in the area of disturbed earth adjacent to manhole or handhole.
   3. Grout end bells into structure walls from both sides to provide watertight entrances.

E. Building Wall Penetrations: Make a transition from underground duct to rigid **PVC coated** steel conduit at least 10 feet (3 m) outside the building wall without reducing duct line slope away from the building, and without forming a trap in the line. Use fittings manufactured for duct-to-conduit transition. Install conduit penetrations of building walls as specified in Section 260544 "Sleeves and Sleeve Seals for Electrical Raceways and Cabling."

F. Do not install conduits underneath a building except where the service/feeder/branch circuit conduits enter the building.

G. Sealing: Provide temporary closure at terminations of ducts that have cables pulled. Seal spare ducts at terminations. Use sealing compound and plugs to withstand at least 15-psig (1.03-MPa) hydrostatic pressure.

H. Pulling Cord: Install minimum 1/8 inch thick ~~100-lbf- (445-N-)~~ test nylon cord with minimum 250 pounds per foot tensile strength in ducts, including spares.

I. Concrete-Encased Ducts: Support ducts on duct separators.
   1. Separator Installation: Space separators close enough to prevent sagging and deforming of ducts, with not less than ~~[4]~~ [**5**] spacers per 20 feet (6 m) of duct. Secure separators to earth and to ducts to prevent floating during concreting. Stagger separators approximately 6 inches (150 mm) between tiers. Tie entire assembly together using fabric straps; do not use tie wires or reinforcing steel that may form conductive or magnetic loops around ducts or duct groups.
   2. Concreting Sequence: Pour each run of envelope between manholes or other terminations in one continuous operation.
      a. Start at one end and finish at the other, allowing for expansion and contraction of ducts as their temperature changes during and after the pour. Use expansion fittings installed according to manufacturer's written recommendations, or use other specific measures to prevent expansion-contraction damage.
      b. If more than one pour is necessary, terminate each pour in a vertical plane and install 3/4-inch (19-mm) reinforcing rod dowels extending 18 inches (450 mm) into concrete on both sides of joint near corners of envelope.
   3. Pouring Concrete: Spade concrete carefully during pours to prevent voids under and between conduits and at exterior surface of envelope. Do not allow a heavy mass of concrete to fall directly onto ducts. Use a plank to direct concrete down sides of bank assembly to trench bottom. Allow concrete to flow to center of bank and rise up in middle, uniformly filling all open spaces. Do not use power-driven agitating equipment unless specifically designed for duct-bank application.
   4. Encase all feeder ducts in a 3 inch concrete envelope. Extend envelope with 3 inches beyond all external surfaces of all outer most ducts. Do not over pour the concrete.
   5. Concrete encasement shall be minimum 3000 psi. All underground ducts containing MV and HV cables (above 600V) shall be encased in red concrete. Concrete shall be premixed during batching with 1-1/2 lbs of red ocher dye per sack of cement.
   6. Reinforcement: Reinforce concrete-encased duct banks where they cross disturbed earth and where indicated. Arrange reinforcing rods and ties without forming conductive or magnetic loops around ducts or duct groups.
   7. Forms: Use walls of trench to form side walls of duct bank where soil is self-supporting and concrete envelope can be poured without soil inclusions; otherwise, use forms.
   8. Minimum Space between Ducts: 3 inches (75 mm) between ducts and exterior envelope wall, ~~2 inches (50 mm) between ducts for like services,~~ and 12 inches (300 mm) ~~4 inches (100 mm)~~ between power and signal ducts.
   9. Depth: Install top of duct bank at least 24 inches (600 mm) below finished grade in areas not subject to deliberate traffic, and at least 30 inches (750 mm) below finished grade in deliberate traffic paths for vehicles, unless otherwise indicated. **Minimum depth below grade in all areas shall be 36 inches (900 mm) for underground ducts containing MV and HV ducts.**
   10. Stub-Ups: Use manufactured PVC coated rigid steel conduit elbows for stub-ups at poles and equipment and at building entrances through the floor.

a. Couple PVC coated steel conduits to ducts with adapters designed for this purpose, and encase coupling with 3 inches (75 mm) of concrete.
b. Stub-Ups to Equipment: For equipment mounted on outdoor concrete bases, extend steel conduit horizontally a minimum of 60 inches (1500 mm) from edge of base. Install insulated grounding bushings on terminations at equipment.

11. Warning Tape: Bury warning tape approximately 12 inches (300 mm) below grade above all concrete-encased ducts and duct banks. Align tape parallel to and within 3 inches (75 mm) of the centerline of duct bank. Provide an additional warning tape for each 12-inch (300-mm) increment of duct-bank width over a nominal 18 inches (450 mm). Space additional tapes 12 inches (300 mm) apart, horizontally.

J. Direct-Buried Duct Banks:
1. Support ducts on duct separators coordinated with duct size, duct spacing, and outdoor temperature.
2. Space separators close enough to prevent sagging and deforming of ducts, with not less than ~~[4]~~ [**5**] spacers per 20 feet (6 m) of duct. Secure separators to earth and to ducts to prevent displacement during backfill and yet permit linear duct movement due to expansion and contraction as temperature changes. Stagger spacers approximately 6 inches (150 mm) between tiers.
3. Excavate trench bottom to provide firm and uniform support for duct bank. Prepare trench bottoms as specified in Section 312000 "Earth Moving" for pipes less than 6 inches (150 mm) in nominal diameter.
4. Install backfill as specified in Section 312000 "Earth Moving."
5. After installing first tier of ducts, backfill and compact. Start at tie-in point and work toward end of duct run, leaving ducts at end of run free to move with expansion and contraction as temperature changes during this process. Repeat procedure after placing each tier. After placing last tier, hand-place backfill to 4 inches (100 mm) over ducts and hand tamp. Firmly tamp backfill around ducts to provide maximum supporting strength. Use hand tamper only. After placing controlled backfill over final tier, make final duct connections at end of run and complete backfilling with normal compaction as specified in Section 312000 "Earth Moving."
6. Install ducts with a minimum of 3 inches (75 mm) between ducts for like services and **12 inches (300 mm)** ~~6 inches (150 mm)~~ between power and signal ducts.
7. Depth: Install top of duct bank at least 36 inches (900 mm) below finished grade, unless otherwise indicated.
8. Set elevation of bottom of duct bank below the frost line.
9. Install manufactured duct elbows for stub-ups at poles and equipment and at building entrances through the floor, unless otherwise indicated. Encase elbows for stub-up ducts throughout the length of the elbow.
10. Install manufactured **PVC coated** rigid steel conduit elbows for stub-ups at poles and equipment and at building entrances through the floor.
    a. Couple **PVC coated** steel conduits to ducts with adapters designed for this purpose, and encase coupling with 3 inches (75 mm) of concrete.
    b. For equipment mounted on outdoor concrete bases, extend **PVC coated** steel conduit horizontally a minimum of 60 inches (1500 mm) from edge of equipment pad or foundation. Install insulated grounding bushings on terminations at equipment.
11. Warning Planks: Bury warning planks approximately 12 inches (300 mm) above direct-buried ducts and duct banks, placing them 24 inches (600 mm) o.c. Align planks along the width and along the centerline of duct bank. Provide an additional plank for each 12-

inch (300-mm) increment of duct-bank width over a nominal 18 inches (450 mm). Space additional planks 12 inches (300 mm) apart, horizontally.

3.5 INSTALLATION OF CONCRETE MANHOLES, HANDHOLES, AND BOXES

A. Precast Concrete Handhole and Manhole Installation:
   1. Comply with ASTM C 891, unless otherwise indicated.
   2. Install units level and plumb and with orientation and depth coordinated with connecting ducts to minimize bends and deflections required for proper entrances.
   3. Unless otherwise indicated, support units on a level bed of **12 inches thick** crushed stone or gravel, graded from 1-inch (25-mm) sieve to No. 4 (4.75-mm) sieve and compacted to same density as adjacent undisturbed earth.

B. Elevations:
   1. Manhole Roof: Install with rooftop at least 15 inches (380 mm) below finished grade.
   2. Manhole Frame: In paved areas and trafficways, set frames flush with finished grade. In other areas, set manhole frames 1 inch (25 mm) above finished grade.
   3. Install handholes with bottom below the frost line.
   4. Handhole Covers: In paved areas and trafficways, set surface flush with finished grade. Set covers of other handholes 1 inch (25 mm) above finished grade.
   5. Where indicated, cast handhole cover frame integrally with handhole structure.

C. Drainage: Install drains in bottom of manholes where indicated. Coordinate with drainage provisions indicated.

D. Manhole Access: Circular opening in manhole roof; sized to match cover size.
   1. Manholes with Fixed Ladders: Offset access opening from manhole centerlines to align with ladder.
   2. Install chimney, constructed of precast concrete collars and rings to support frame and cover and to connect cover with manhole roof opening. Provide moisture-tight masonry joints and waterproof grouting for cast-iron frame to chimney.

E. Hardware: Install removable hardware, including pulling eyes, cable stanchions, [**and**] cable arms, [**and insulators,**]as required for installation and support of cables and conductors and as indicated.

F. Fixed Manhole Ladders: Arrange to provide for safe entry with maximum clearance from cables and other items in manholes.

G. Field-Installed Bolting Anchors in Manholes and Concrete Handholes: Do not drill deeper than 3-7/8 inches (98 mm) for manholes and 2 inches (50 mm) for handholes, for anchor bolts installed in the field. Use a minimum of two anchors for each cable stanchion.

H. Warning Sign: Install "Confined Space Hazard" warning sign on the inside surface of each manhole cover.

3.6 INSTALLATION OF HANDHOLES AND BOXES OTHER THAN PRECAST CONCRETE

A. Install handholes and boxes level and plumb and with orientation and depth coordinated with connecting ducts to minimize bends and deflections required for proper entrances. Use box extension if required to match depths of ducts, and seal joint between box and extension as recommended by the manufacturer.

B. Unless otherwise indicated, support units on a level bed of **12 inches thick** crushed stone or gravel, graded from 1/2-inch (12.7-mm) sieve to No. 4 (4.75-mm) sieve and compacted to same density as adjacent undisturbed earth.

C. Elevation: In paved areas and trafficways, set so cover surface will be flush with finished grade. Set covers of other handholes 1 inch (25 mm) above finished grade.

D. Install handholes and boxes with bottom below the frost line.

E. Install removable hardware, including pulling eyes, cable stanchions, cable arms, and insulators, as required for installation and support of cables and conductors and as indicated. Select arm lengths to be long enough to provide spare space for future cables, but short enough to preserve adequate working clearances in the enclosure.

F. Field-cut openings for ducts and conduits according to enclosure manufacturer's written instructions. Cut wall of enclosure with a tool designed for material to be cut. Size holes for terminating fittings to be used, and seal around penetrations after fittings are installed.

3.7 GROUNDING

A. Ground underground ducts and utility structures according to Section 260526 "Grounding and Bonding for Electrical Systems."

3.8 FIELD QUALITY CONTROL

A. During construction, partially completed duct lines shall be protected from the entrance of debris such as mud, sand and dirt by means of suitable conduit plugs. As each section of a duct line is completed from manhole to vault, a testing mandrel not less than 12 inches long with a diameter 1/4-inch less than the size of the duct, shall be drawn through each duct, after which a brush having the diameter of the duct, and have stiff bristles shall be drawn through until the conduit is clear of all particles of earth, sand, gravel and other foreign materials. Conduit plugs shall then be immediately installed. Underground conduits, which terminate inside the building below grade, or which slope so that water might flow into building, shall be sealed at termination after installation of wires.

B. Perform the following tests and inspections and prepare test reports:
   1. Demonstrate capability and compliance with requirements on completion of installation of underground ducts and utility structures.
   2. Pull aluminum or wood test mandrel through duct to prove joint integrity and test for out-of-round duct. Provide mandrel equal to 80 percent fill of duct. If obstructions are indicated, remove obstructions and retest.

3. Test manhole **and handhole** grounding to ensure electrical continuity of grounding and bonding connections. Measure and report ground resistance as specified in Section 260526 "Grounding and Bonding for Electrical Systems."

C. Correct deficiencies and retest as specified above to demonstrate compliance.

3.9 CLEANING

A. Pull leather-washer-type duct cleaner, with graduated washer sizes, through full length of ducts. Follow with rubber duct swab for final cleaning and to assist in spreading lubricant throughout ducts.

B. Clean internal surfaces of manholes, including sump. Remove foreign material.

END OF SECTION 260543

SECTION 260544 - SLEEVES AND SLEEVE SEALS FOR ELECTRICAL RACEWAYS AND CABLING

PART 1 - GENERAL

1.1 RELATED DOCUMENTS

A. Drawings and general provisions of the Contract, including General and Supplementary Conditions and Division 01 Specification Sections, apply to this Section.

1.2 SUMMARY

A. Section Includes:
1. Sleeves for raceway and cable penetration of non-fire-rated construction walls and floors.
2. Sleeve-seal systems.
3. Sleeve-seal fittings.
4. Grout.
5. Silicone sealants.

B. Related Requirements:
1. Section 078413 "Penetration Firestopping" for penetration firestopping installed in fire-resistance-rated walls, horizontal assemblies, and smoke barriers, with and without penetrating items.

1.3 ACTION SUBMITTALS

A. Product Data: For each type of product.

B. LEED Submittals:
1. Product Data for Credit EQ 4.1: For sealants, documentation including printed statement of VOC content.
2. Laboratory Test Reports for Credit EQ 4: For sealants, documentation indicating that products comply with the testing and product requirements of the California Department of Health Services' "Standard Practice for the Testing of Volatile Organic Emissions from Various Sources Using Small-Scale Environmental Chambers."

PART 2 - PRODUCTS

2.1 SLEEVES

A. Wall Sleeves:
1. Steel Pipe Sleeves: ASTM A 53/A 53M, Type E, Grade B, Schedule 40, zinc coated, plain ends.

2. Cast-Iron Pipe Sleeves: Cast or fabricated "wall pipe," equivalent to ductile-iron pressure pipe, with plain ends and integral waterstop unless otherwise indicated.

B. Sleeves for Conduits Penetrating Non-Fire-Rated Gypsum Board Assemblies: Galvanized-steel sheet; 0.0239-inch (0.6-mm) minimum thickness; round tube closed with welded longitudinal joint, with tabs for screw-fastening the sleeve to the board.

C. PVC-Pipe Sleeves: ASTM D 1785, Schedule 40.

D. Molded-PVC Sleeves: With nailing flange for attaching to wooden forms.

E. Molded-PE or -PP Sleeves: Removable, tapered-cup shaped, and smooth outer surface with nailing flange for attaching to wooden forms.

F. Sleeves for Rectangular Openings:
1. Material: Galvanized sheet steel.
2. Minimum Metal Thickness:
   a. For sleeve cross-section rectangle perimeter less than 50 inches (1270 mm) and with no side larger than 16 inches (400 mm), thickness shall be 0.052 inch (1.3 mm).
   b. For sleeve cross-section rectangle perimeter 50 inches (1270 mm) or more and one or more sides larger than 16 inches (400 mm), thickness shall be 0.138 inch (3.5 mm).

2.2 SLEEVE-SEAL SYSTEMS

A. Description: Modular sealing device, designed for field assembly, to fill annular space between sleeve and raceway or cable.
1. Manufacturers: Subject to compliance with requirements, provide products by one of the following manufacturers:
   a. Advance Products & Systems, Inc.
   b. CALPICO, Inc.
   c. Metraflex Company (The).
   d. Pipeline Seal and Insulator, Inc.
   e. Proco Products, Inc.
   f. 3M
2. Sealing Elements: EPDM rubber interlocking links shaped to fit surface of pipe. Include type and number required for pipe material and size of pipe.
3. Pressure Plates: Carbon steel.
4. Connecting Bolts and Nuts: Carbon steel, with corrosion-resistant coating, of length required to secure pressure plates to sealing elements.

2.3 SLEEVE-SEAL FITTINGS

A. Description: Manufactured plastic, sleeve-type, waterstop assembly made for embedding in concrete slab or wall. Unit shall have plastic or rubber waterstop collar with center opening to match piping OD.

1. Manufacturers: Subject to compliance with requirements, provide products by one of the following manufacturers:
   a. Presealed Systems.
   b. Metraflex

2.4 GROUT

A. Description: Nonshrink; recommended for interior and exterior sealing openings in non-fire-rated walls or floors.

B. Standard: ASTM C 1107/C 1107M, Grade B, post-hardening and volume-adjusting, dry, hydraulic-cement grout.

C. Design Mix: 5000-psi (34.5-MPa), 28-day compressive strength.

D. Packaging: Premixed and factory packaged.

2.5 SILICONE SEALANTS

A. Silicone Sealants: Single-component, silicone-based, neutral-curing elastomeric sealants of grade indicated below.
   1. Grade: Pourable (self-leveling) formulation for openings in floors and other horizontal surfaces that are not fire rated.
   2. Sealant shall have VOC content of <**Insert value**> g/L or less when calculated according to 40 CFR 59, Subpart D (EPA Method 24).
   3. Sealant shall comply with the testing and product requirements of the California Department of Health Services' "Standard Practice for the Testing of Volatile Organic Emissions from Various Sources Using Small-Scale Environmental Chambers."

B. Silicone Foams: Multicomponent, silicone-based liquid elastomers that, when mixed, expand and cure in place to produce a flexible, nonshrinking foam.

PART 3 - EXECUTION

3.1 SLEEVE INSTALLATION FOR NON-FIRE-RATED ELECTRICAL PENETRATIONS

A. Comply with NECA 1.

B. Comply with NEMA VE 2 for cable tray and cable penetrations.

C. Sleeves for Conduits Penetrating Above-Grade Non-Fire-Rated Concrete and Masonry-Unit Floors and Walls:
   1. Interior Penetrations of Non-Fire-Rated Walls and Floors:
      a. Seal annular space between sleeve and raceway or cable, using joint sealant appropriate for size, depth, and location of joint. Comply with requirements in Section 079200 "Joint Sealants."

b. Seal space outside of sleeves with mortar or grout. Pack sealing material solidly between sleeve and wall so no voids remain. Tool exposed surfaces smooth; protect material while curing.

2. Use pipe sleeves unless penetration arrangement requires rectangular sleeved opening.
3. Size pipe sleeves to provide 1/4-inch (6.4-mm) annular clear space between sleeve and raceway or cable unless sleeve seal is to be installed or unless seismic criteria require different clearance.
4. Install sleeves for wall penetrations unless core-drilled holes or formed openings are used. Install sleeves during erection of walls. Cut sleeves to length for mounting flush with both surfaces of walls. Deburr after cutting.
5. Retain subparagraph below when unsleeved core-drilled openings in concrete floors are not allowed.
6. Install sleeves for floor penetrations. Extend sleeves installed in floors 2 inches (50 mm) above finished floor level. Install sleeves during erection of floors.

D. Sleeves for Conduits Penetrating Non-Fire-Rated Gypsum Board Assemblies:
1. Use circular metal sleeves unless penetration arrangement requires rectangular sleeved opening.
2. Seal space outside of sleeves with approved joint compound for gypsum board assemblies.

E. Roof-Penetration Sleeves: Seal penetration of individual raceways and cables with flexible boot-type flashing units applied in coordination with roofing work.

F. Aboveground, Exterior-Wall Penetrations: Seal penetrations using steel pipe sleeves and mechanical sleeve seals. Select sleeve size to allow for 1-inch (25-mm) annular clear space between pipe and sleeve for installing mechanical sleeve seals.

G. Underground, Exterior-Wall and Floor Penetrations: Install PVC Coated cast-iron pipe sleeves. Size sleeves to allow for 1-inch (25-mm) annular clear space between raceway or cable and sleeve for installing sleeve-seal system.

3.2 SLEEVE-SEAL-SYSTEM INSTALLATION

A. Install sleeve-seal systems in sleeves in exterior concrete walls and slabs-on-grade at raceway entries into building.

B. Install type and number of sealing elements recommended by manufacturer for raceway or cable material and size. Position raceway or cable in center of sleeve. Assemble mechanical sleeve seals and install in annular space between raceway or cable and sleeve. Tighten bolts against pressure plates that cause sealing elements to expand and make watertight seal.

3.3 SLEEVE-SEAL-FITTING INSTALLATION

A. Install sleeve-seal fittings in new walls and slabs as they are constructed.

B. Assemble fitting components of length to be flush with both surfaces of concrete slabs and walls. Position waterstop flange to be centered in concrete slab or wall.

C. Secure nailing flanges to concrete forms.

D. Using grout, seal the space around outside of sleeve-seal fittings.

END OF SECTION 260544

SECTION 260553 - IDENTIFICATION FOR ELECTRICAL SYSTEMS

PART 1 - GENERAL

1.1 RELATED DOCUMENTS

A. Drawings and general provisions of the Contract, including General and Supplementary Conditions and Division 01 Specification Sections, apply to this Section.

1.2 SUMMARY

A. Section Includes:
1. Color and legend requirements for raceways, conductors, and warning labels and signs.
2. Labels.
3. Bands and tubes.
4. Tapes and stencils.
5. Tags.
6. Signs.
7. Cable ties.
8. Paint for identification.
9. Fasteners for labels and signs.

1.3 ACTION SUBMITTALS

A. Product Data: For each type of product.
1. Include construction details, material descriptions, dimensions of individual components and profiles, and finishes for electrical identification products.

B. Samples: For each type of label and sign to illustrate composition, size, colors, lettering style, mounting provisions, and graphic features of identification products.

C. Identification Schedule: For each piece of electrical equipment and electrical system components to be an index of nomenclature for electrical equipment and system components used in identification signs and labels. Use same designations indicated on Drawings.

D. Delegated-Design Submittal: For arc-flash hazard study.

PART 2 - PRODUCTS

2.1 PERFORMANCE REQUIREMENTS

A. Comply with ASME A13.1and IEEE C2.

B. Comply with NFPA 70.

C. Comply with 29 CFR 1910.144 and 29 CFR 1910.145.

D. Comply with ANSI Z535.4 for safety signs and labels.

E. Comply with NFPA 70E and Section 26 0573 "Short Circuit, Coordination and Arc-Flash Study" requirements for arc-flash warning labels.

F. Adhesive-attached labeling materials, including label stocks, laminating adhesives, and inks used by label printers, shall comply with UL 969.

G. Thermal Movements: Allow for thermal movements from ambient and surface temperature changes.
   1. Temperature Change: 120 deg F, ambient; 180 deg F, material surfaces.

2.2 COLOR AND LEGEND REQUIREMENTS

A. Raceways and Cables Carrying Circuits at 600 V or Less:
   1. Black letters on an orange field.
   2. Legend: Indicate voltage and system or service type.

B. Color-Coding for Phase- and Voltage-Level Identification, 600 V or Less: Use colors listed below for ungrounded service' feeder and branch-circuit conductors.
   1. Color shall be factory applied.
   2. Colors for 208/120-V Circuits:
      a. Phase A: Black.
      b. Phase B: Red.
      c. Phase C: Blue.
   3. Color for Neutral: White.
   4. Color for Equipment Grounds: Green.
   5. Colors for Isolated Grounds: Green with white stripe.

C. Warning Label Colors:
   1. Identify system voltage with black letters on an orange background.

D. Warning labels and signs shall include, but are not limited to, the following legends:
   1. Multiple Power Source Warning: "DANGER - ELECTRICAL SHOCK HAZARD - EQUIPMENT HAS MULTIPLE POWER SOURCES."
   2. Workspace Clearance Warning: "WARNING - OSHA REGULATION - AREA IN FRONT OF ELECTRICAL EQUIPMENT MUST BE KEPT CLEAR FOR 36 INCHES."

E. Equipment Identification Labels:
   1. Black letters on a white field for equipment connected to normal power and Red letters on a white field for equipment connected to emergency/standby power unless otherwise indicated

2.3 LABELS

A. Vinyl Wraparound Labels: Preprinted, flexible labels laminated with a clear, weather- and chemical-resistant coating and matching wraparound clear adhesive tape for securing label ends.
   1. Manufacturers: Subject to compliance with requirements, provide products by one of the following:
      a. Brady Corporation.
      b. HellermannTyton.
      c. Marking Services, Inc.
      d. Panduit Corp.
      e. Seton Identification Products.

B. Snap-around Labels: Slit, pretensioned, flexible, preprinted, color-coded acrylic sleeves, with diameters sized to suit diameters and that stay in place by gripping action.
   1. Manufacturers: Subject to compliance with requirements, provide products by one of the following:
      a. Brady Corporation.
      b. HellermannTyton.
      c. Marking Services, Inc.
      d. Panduit Corp.
      e. Seton Identification Products.

C. Self-Adhesive Wraparound Labels: Preprinted, 3-mil-thick, polyesterflexible label with acrylic pressure-sensitive adhesive.
   1. Manufacturers: Subject to compliance with requirements, provide products by one of the following:
      a. Brady Corporation.
      b. .
      c. Grafoplast Wire Markers.
      d. Ideal Industries, Inc.
      e. Marking Services, Inc.
      f. Panduit Corp.
      g. Seton Identification Products.
   2. Self-Lamination: Clear; UV-, weather- and chemical-resistant; self-laminating, protective shield over the legend. Labels sized such that the clear shield overlaps the entire printed legend.
   3. Marker for Labels: Permanent, waterproof, black ink marker recommended by tag manufacturer.
   4. Marker for Labels: Machine-printed, permanent, waterproof, black ink recommended by printer manufacturer.

D. Self-Adhesive Labels: Vinyl, thermal, transfer-printed, 3-mil-thick, multicolor, weather- and UV-resistant, pressure-sensitive adhesive labels, configured for intended use and location.
   1. Manufacturers: Subject to compliance with requirements, provide products by one of the following:
      a. Brady Corporation.
      b. Grafoplast Wire Markers.
      c. HellermannTyton.

d. Ideal Industries, Inc.
e. Marking Services, Inc.
f. Panduit Corp.
g. Seton Identification Products.

2. Minimum Nominal Size:
   a. 1-1/2 by 6 inchesfor raceway and conductors.
   b. 3-1/2 by 5 inchesfor equipment.
   c. As required by authorities having jurisdiction.

2.4 BANDS AND TUBES

A. Snap-around, Color-Coding Bands: Slit, pretensioned, flexible, solid-colored acrylic sleeves, 2 inches long, with diameters sized to suit diameters and that stay in place by gripping action.
   1. Manufacturers: Subject to compliance with requirements, provide products by one of the following:
      a. Brady Corporation.
      b. HellermannTyton.
      c. Marking Services, Inc.
      d. Panduit Corp.

B. Heat-Shrink Preprinted Tubes: Flame-retardant polyolefin tubes with machine-printed identification labels, sized to suit diameter and shrunk to fit firmly. Full shrink recovery occurs at a maximum of 200 deg F. Comply with UL 224.
   1. Manufacturers: Subject to compliance with requirements, provide products by one of the following:
      a. Brady Corporation.
      b. Panduit Corp.

2.5 TAPES AND STENCILS

A. Marker Tapes: Vinyl or vinyl-cloth, self-adhesive wraparound type, with circuit identification legend machine printed by thermal transfer or equivalent process.
   1. Manufacturers: Subject to compliance with requirements, provide products by one of the following:
      a. Carlton Industries, LP.
      b. HellermannTyton.
      c. Ideal Industries, Inc.
      d. Marking Services, Inc.
      e. Panduit Corp.

B. Self-Adhesive Vinyl Tape: Colored, heavy duty, waterproof, fade resistant; not less than 3 mils thick by 1 to 2 inches wide; compounded for outdoor use.
   1. Manufacturers: Subject to compliance with requirements, provide products by one of the following:
      a. Brady Corporation.
      b. Carlton Industries, LP.
      c. emedco.
      d. Marking Services, Inc.

C. Tape and Stencil: 4-inch-wide black stripes on 10-inch centers placed diagonally over orange background and is 12 inches wide. Stop stripes at legends.
   1. Manufacturers: Subject to compliance with requirements, provide products by one of the following:
      a. HellermannTyton.
      b. LEM Products Inc.
      c. Marking Services, Inc.
      d. Seton Identification Products.

D. Floor Marking Tape: 2-inch-wide, 5-mil pressure-sensitive vinyl tape, with yellow and black stripes and clear vinyl overlay.
   1. Manufacturers: Subject to compliance with requirements, provide products by one of the following:
      a. Carlton Industries, LP.
      b. Seton Identification Products.

E. Underground-Line Warning Tape:
   1. Manufacturers: Subject to compliance with requirements, provide products by one of the following:
      a. Brady Corporation.
      b. Ideal Industries, Inc.
      c. Marking Services, Inc.
      d. Seton Identification Products.
   2. Tape:
      a. Recommended by manufacturer for the method of installation and suitable to identify and locate underground electrical and communications utility lines.
      b. Printing on tape shall be permanent and shall not be damaged by burial operations.
      c. Tape material and ink shall be chemically inert and not subject to degradation when exposed to acids, alkalis, and other destructive substances commonly found in soils.
   3. Color and Printing:
      a. Comply with ANSI Z535.1, ANSI Z535.2, ANSI Z535.3, ANSI Z535.4, and ANSI Z535.5.
      b. Inscriptions for Red-Colored Tapes: "CAUTION BURIED ELECTRIC LINE, HIGH VOLTAGE" .
      c. Inscriptions for Orange-Colored Tapes: "CAUTION BURIED TELEPHONE CABLE, CATV CABLE, COMMUNICATIONS CABLE, OPTICAL FIBER CABLE" .
   4. Tag: Type IID:
      a. Reinforced, detectable three-layer laminate, consisting of a printed pigmented woven scrim, a solid aluminum-foil core, and a clear protective film that allows inspection of the continuity of the conductive core; bright-colored, continuous-printed on one side with the inscription of the utility, compounded for direct-burial service.
      b. Width: 6 inches.
      c. Overall Thickness: 5 mils.
      d. Foil Core Thickness: 0.35 mil.
      e. Weight: 34 lb/1000 sq. ft..
      f. Tensile according to ASTM D 882: 300 lbf and 12,500 psi.

F. Stenciled Legend: In nonfading, waterproof, black ink or paint. Minimum letter height shall be inchunless otherwise indicated. If requested by Architect, match Owner's existing legend type, size etc.

2.6 TAGS

A. Metal Tags: Brass or aluminum, 2 by 2 by 0.05 inch, with stamped legend, punched for use with self-locking cable tie fastener.
   1. Manufacturers: Subject to compliance with requirements, provide products by one of the following:
      a. Brady Corporation.
      b. Carlton Industries, LP.
      c. emedco.
      d. Marking Services, Inc.
      e. Seton Identification Products.

2.7 SIGNS

A. Baked-Enamel Signs:
   1. Manufacturers: Subject to compliance with requirements, provide products by one of the following:
      a. Carlton Industries, LP.
      b. Champion America.
      c. emedco.
      d. Marking Services, Inc.
   2. Preprinted aluminum signs, high-intensity reflective, punched or drilled for fasteners, with colors, legend, and size required for application.
   3. 1/4-inch grommets in corners for mounting.
   4. Nominal Size: 7 by 10 inches.

B. Metal-Backed Butyrate Signs:
   1. Manufacturers: Subject to compliance with requirements, provide products by one of the following:
      a. Brady Corporation.
      b. Champion America.
      c. emedco.
      d. Marking Services, Inc.
   2. Weather-resistant, nonfading, preprinted, cellulose-acetate butyrate signs, with 0.0396-inch galvanized-steel backing, punched and drilled for fasteners, and with colors, legend, and size required for application.
   3. 1/4-inch grommets in corners for mounting.
   4. Nominal Size: 10 by 14 inches.

C. Laminated Acrylic or Melamine Plastic Signs:
   1. Manufacturers: Subject to compliance with requirements, provide products by one of the following:
      a. Brady Corporation.

b. Carlton Industries, LP.
c. emedco.
d. Marking Services, Inc.

2. Engraved legend.
3. Thickness:
   a. For signs up to 20 sq. in., minimum 1/16 inch thick.
   b. For signs larger than 20 sq. in., 1/8 inch thick.
   c. Engraved legend with black letters on white face background for equipment connected to normal power and red letters on white face background for equipment connected to emergency/standby power. Verify with Architect if legend has to match Owner's existing signs.
   d. Punched or drilled for mechanical fasteners with 1/4-inch grommets in corners for mounting.
   e. Framed with mitered acrylic molding and arranged for attachment at applicable equipment.

2.8 CABLE TIES

A. Manufacturers: Subject to compliance with requirements, provide products by one of the following:
   1. HellermannTyton.
   2. Ideal Industries, Inc.
   3. Marking Services, Inc.
   4. Panduit Corp.

B. General-Purpose Cable Ties: Fungus inert, self-extinguishing, one piece, self-locking, and Type 6/6 nylon.
   1. Minimum Width: 3/16 inch.
   2. Tensile Strength at 73 Deg F according to ASTM D 638: 12,000 psi.
   3. Temperature Range: Minus 40 to plus 185 deg F.
   4. Color: Black, except where used for color-coding.

C. UV-Stabilized Cable Ties: Fungus inert, designed for continuous exposure to exterior sunlight, self-extinguishing, one piece, self-locking, and Type 6/6 nylon.
   1. Minimum Width: 3/16 inch.
   2. Tensile Strength at 73 Deg F according to ASTM D 638: 12,000 psi.
   3. Temperature Range: Minus 40 to plus 185 deg F.
   4. Color: Black.

D. Plenum-Rated Cable Ties: Self-extinguishing, UV stabilized, one piece, and self-locking.
   1. Minimum Width: 3/16 inch.
   2. Tensile Strength at 73 Deg F according to ASTM D 638: 7000 psi.
   3. UL 94 Flame Rating: 94V-0.
   4. Temperature Range: Minus 50 to plus 284 deg F.
   5. Color: Black.

2.9 MISCELLANEOUS IDENTIFICATION PRODUCTS

A. Paint: Comply with requirements in painting Sections for paint materials and application requirements. Retain paint system applicable for surface material and location (exterior or interior).

B. Fasteners for Labels and Signs: Self-tapping, stainless-steel screws or stainless-steel machine screws with nuts and flat and lock washers.

PART 3 - EXECUTION

3.1 PREPARATION

A. Self-Adhesive Identification Products: Before applying electrical identification products, clean substrates of substances that could impair bond, using materials and methods recommended by manufacturer of identification product.

3.2 INSTALLATION

A. Verify and coordinate identification names, abbreviations, colors, and other features with requirements in other Sections requiring identification applications, Drawings, Shop Drawings, manufacturer's wiring diagrams, and operation and maintenance manual. Use consistent designations throughout Project.

B. Install identifying devices before installing acoustical ceilings and similar concealment.

C. Verify identity of each item before installing identification products.

D. Coordinate identification with Project Drawings, manufacturer's wiring diagrams, and operation and maintenance manual.

E. Apply identification devices to surfaces that require finish after completing finish work.

F. Install signs with approved legend to facilitate proper identification, operation, and maintenance of electrical systems and connected items.

G. System Identification for Raceways and Cables under 600 V: Identification shall completely encircle cable or conduit. Place identification of two-color markings in contact, side by side.
   1. Secure tight to surface of conductor, cable, or raceway.

H. Auxiliary Electrical Systems Conductor Identification: Identify field-installed alarm, control, and signal connections.

I. Emergency Operating Instruction Signs: Install instruction signs with white legend on a red background with minimum 3/8-inch-high letters for emergency instructions at equipment used for power transfer. Refer to drawings for additional information.

J. Elevated Components: Increase sizes of labels, signs, and letters to those appropriate for viewing from the floor.

K. Accessible Fittings for Raceways: Identify the covers of each junction and pull box of the following systems with the wiring system legend and system voltage. System legends shall be as follows:
   1. "EMERGENCY POWER."
   2. "POWER."

L. Vinyl Wraparound Labels:
   1. Secure tight to surface of raceway or cable at a location with high visibility and accessibility.
   2. Attach labels that are not self-adhesive type with clear vinyl tape, with adhesive appropriate to the location and substrate.

M. Snap-around Labels: Secure tight to surface at a location with high visibility and accessibility.

N. Self-Adhesive Wraparound Labels: Secure tight to surface at a location with high visibility and accessibility.

O. Self-Adhesive Labels:
   1. On each item, install unique designation label that is consistent with wiring diagrams, schedules, and operation and maintenance manual.
   2. Unless otherwise indicated, provide a single line of text with 1/2-inch-high letters on 1-1/2-inch-high label; where two lines of text are required, use labels 2 inches high.

P. Snap-around Color-Coding Bands: Secure tight to surface at a location with high visibility and accessibility.

Q. Heat-Shrink, Preprinted Tubes: Secure tight to surface at a location with high visibility and accessibility.

R. Marker Tapes: Secure tight to surface at a location with high visibility and accessibility.

S. Self-Adhesive Vinyl Tape: Secure tight to surface at a location with high visibility and accessibility.
   1. Field-Applied, Color-Coding Conductor Tape: Apply in half-lapped turns for a minimum distance of 6 inches where splices or taps are made. Apply last two turns of tape with no tension to prevent possible unwinding.

T. Tape and Stencil: Comply with requirements in painting Sections for surface preparation and paint application.

U. Floor Marking Tape: Apply stripes to finished surfaces following manufacturer's written instructions.

V. Underground Line Warning Tape:
   1. During backfilling of trenches, install continuous underground-line warning tape directly above cable or raceway at 12 inches below finished grade. Use multiple tapes where

width of multiple lines installed in a common trench or concrete envelope exceeds 16 inches overall.
2. Limit use of underground-line warning tape to direct-buried cables.
3. Install underground-line warning tape for direct-buried cables and cables in raceways.

W. Metal Tags:
1. Place in a location with high visibility and accessibility.
2. Secure using general-purpose UV-stabilized cable ties for all area except use plenum-rated cable ties in plenum areas.

X. Nonmetallic Preprinted Tags:
1. Place in a location with high visibility and accessibility.
2. Secure using general-purpose UV-stabilized in all areas except use plenum-rated cable ties in plenum areas.

Y. Baked-Enamel Signs:
1. Attach signs that are not self-adhesive type with mechanical fasteners appropriate to the location and substrate.
2. Unless otherwise indicated, provide a single line of text with 1/2-inch-high letters on minimum 1-1/2-inch-high sign; where two lines of text are required, use signs minimum 2 inches high.

Z. Metal-Backed Butyrate Signs:
1. Attach signs that are not self-adhesive type with mechanical fasteners appropriate to the location and substrate.
2. Unless otherwise indicated, provide a single line of text with 1/2-inch-high letters on 1-1/2-inch-high sign; where two lines of text are required, use labels 2 inches high.

AA. Laminated Acrylic or Melamine Plastic Signs:
1. Attach signs that are not self-adhesive type with mechanical fasteners appropriate to the location and substrate.
2. Unless otherwise indicated, provide a single line of text with 1/2-inch-high letters on 1-1/2-inch-high sign; where two lines of text are required, use labels 2 inches high.

BB. Cable Ties: General purpose, for attaching tags, except as listed below:
1. Outdoors: UV-stabilized nylon.
2. In Spaces Handling Environmental Air: Plenum rated.

3.3 IDENTIFICATION SCHEDULE

A. Install identification materials and devices at locations for most convenient viewing without interference with operation and maintenance of equipment. Install access doors or panels to provide view of identifying devices.

B. Identify conductors, cables, and terminals in enclosures and at junctions, terminals, pull points, and locations of high visibility. Identify by system and circuit designation.

C. Accessible Raceways and Metal-Clad Cables, 600 V or Less, for Service, Feeder, and Branch Circuits, More Than 30 A and 120 V to Ground: Identify with self-adhesive raceway labels.

1. Locate identification at changes in direction, at penetrations of walls and floors, at 50-foot maximum intervals in straight runs, and at 25-foot maximum intervals in congested areas.

D. Accessible Fittings for Raceways and Cables within Buildings: Identify the covers of each junction and pull box of the following systems with self-adhesive labels containing the wiring system legend and system voltage. System legends shall be as follows:
   1. "EMERGENCY POWER."
   2. "POWER."

E. Power-Circuit Conductor Identification, 600 V or Less: For conductors in vaults, pull and junction boxes, manholes, and handholes, use self-adhesive wraparound labels to identify the phase.
   1. Locate identification at changes in direction, at penetrations of walls and floors, at 50-foot maximum intervals in straight runs, and at 25-foot maximum intervals in congested areas.

F. Control-Circuit Conductor Identification: For conductors and cables in pull and junction boxes, manholes, and handholes, use self-adhesive labels with the conductor or cable designation, origin, and destination.

G. Control-Circuit Conductor Termination Identification: For identification at terminations, provide heat-shrink preprinted tubes with the conductor designation.

H. Conductors to Be Extended in the Future: Attach write-on tags to conductors and list source.

I. Auxiliary Electrical Systems Conductor Identification: Self-adhesive vinyl tape that is uniform and consistent with system used by manufacturer for factory-installed connections.
   1. Identify conductors, cables, and terminals in enclosures and at junctions, terminals, and pull points. Identify by system and circuit designation.

J. Locations of Underground Lines: Underground-line warning tape for power, lighting, communication, and control wiring and optical-fiber cable.

K. Workspace Indication: Apply floor marking tape to finished surfaces. Show working clearances in the direction of access to live parts. Workspace shall comply with NFPA 70 and 29 CFR 1926.403 unless otherwise indicated. Do not install at flush-mounted panelboards and similar equipment in finished spaces.

L. Instructional Signs: Self-adhesive labels, including the color code for grounded and ungrounded conductors.

M. Warning Labels for Indoor Cabinets, Boxes, and Enclosures for Power and Lighting: Metal-backed, butyrate warning signs.
   1. Apply to exterior of door, cover, or other access.
   2. For equipment with multiple power or control sources, apply to door or cover of equipment, including, but not limited to, the following:
      a. Power-transfer switches.
      b. Controls with external control power connections.

N. Arc Flash Warning Labeling: Self-adhesive labels.

O. Operating Instruction Signs: Laminated acrylic or melamine plastic signs.

P. Emergency Operating Instruction Signs: Laminated acrylic or melamine plastic signs with white legend on a red background with minimum 3/8-inch-high letters for emergency instructions at equipment used for power transfer.

Q. Equipment Identification Labels:
   1. Indoor Equipment: Laminated acrylic or melamine plastic sign.
   2. Outdoor Equipment: Laminated acrylic or melamine sign. Stenciled legend 4 inches high shall also be provided when requested by Architect.
   3. Equipment to Be Labeled:
      a. Panelboards: Typewritten directory of circuits in the location provided by panelboard manufacturer. Panelboard identification shall be in the form of a engraved, laminated acrylic or melamine label.
      b. Enclosures and electrical cabinets.
      c. Access doors and panels for concealed electrical items.
      d. Switchboards.
      e. Transformers: Label that includes tag designation indicated on Drawings for the transformer, feeder, and panelboards or equipment supplied by the secondary.
      f. Substations.
      g. Emergency system boxes and enclosures.
      h. Motor-control centers.
      i. Enclosed switches.
      j. Enclosed circuit breakers.
      k. Enclosed controllers.
      l. Variable-speed controllers.
      m. Push-button stations.
      n. Power-transfer equipment.
      o. Contactors.
      p. Remote-controlled switches, dimmer modules, and control devices.
      q. Power-generating units.
      r. Monitoring and control equipment.

END OF SECTION 260553

SECTION 260573 – SHORT CIRCUIT, COORDINATION AND ARC FLASH STUDIES

PART 1 - GENERAL

1.1 RELATED DOCUMENTS

A. Drawings and general provisions of the Contract, including General and Supplementary Conditions and Division 01 Specification Sections, apply to this Section.

1.2 SUMMARY

A. This Section includes computer-based, fault-current, overcurrent protective device coordination studies and arc flash study. Protective devices shall be set based on results of the protective device coordination study.
   1. Coordination of series-rated devices is permitted where indicated on Drawings.

1.3 DEFINITIONS

A. Existing to Remain: Existing items of construction that are not to be removed and that are not otherwise indicated to be removed, removed and salvaged, or removed and reinstalled. Existing to remain items shall remain functional throughout the construction period.

B. Field Adjusting Agency: An independent electrical testing agency with full-time employees and the capability to adjust devices and conduct testing indicated and that is a member company of NETA.

C. One-Line Diagram: A diagram that shows, by means of single lines and graphic symbols, the course of an electric circuit or system of circuits and the component devices or parts used therein.

D. Power System Analysis Software Developer: An entity that commercially develops, maintains, and distributes computer software used for power system studies.

E. Power System Analysis Specialist: Professional engineer in charge of performing the study and documenting recommendations, licensed in the state where Project is located.

F. Protective Device: A device that senses when an abnormal current flow exists and then removes the affected portion of the circuit from the system.

G. SCCR: Short-circuit current rating.

H. Service: The conductors and equipment for delivering electric energy from the serving utility to the wiring system of the premises served.

I. Single-Line Diagram: See "One-Line Diagram."

1.4 ACTION SUBMITTALS

A. COORDINATION STUDIES
1. Product Data: For computer software program to be used for studies.
2. Other Action Submittals: The following submittals shall be made after the approval process for system protective devices has been completed. Submittals **may** be in digital form if requested by the architect/engineer.
3. Coordination-study input data, including completed computer program input data sheets.
4. Study and Equipment Evaluation Reports.
5. Coordination-Study Report.

B. SHORT CURCUIT STUDIES
1. For computer software program to be used for studies.
2. Submit the following after the approval of system protective devices submittals. Submittals **shall** be in digital form.
   a. Short-circuit study input data, including completed computer program input data sheets.
   b. Short-circuit study and equipment evaluation report; signed, dated, and sealed by a qualified professional engineer.
   c. Revised one-line diagram, reflecting field investigation results and results of short-circuit study.

C. ARC FLASH STUDIES
1. Product Data: For computer software program to be used for studies.
2. Study Submittals: Submit the following submittals after the approval of system protective devices submittals. Submittals **shall** be in digital form:
3. Arc-flash study input data, including completed computer program input data sheets.
4. Arc-flash study report; signed, dated, and sealed by Power Systems Analysis Specialist.

1.5 INFORMATIONAL SUBMITTALS

A. Qualification Data: For power systems analysis specialist.

B. Product Certificates: For coordination-study, fault-current-study computer software programs, certifying compliance with IEEE 399.

C. Product Certificates: For arc-flash hazard analysis software, certifying compliance with IEEE 1584 and NFPA 70E.

D. Power Systems Analysis Software Developer

E. Qualification Data: For Field Adjusting Agency

1.6 CLOSEOUT SUBMITTALS

A. Operation and Maintenance Data: For overcurrent protective devices to include in emergency, operation, and maintenance manuals.
1. The following are from the Coordination Study Report:

a. Final one-line diagram.
b. Final protective device coordination study.
c. Coordination study data files.
d. List of all protective device settings.
e. Time-current coordination curves.
f. Power system data.

2. The following are from the Short-Circuit Study Report:
   a. Final one-line diagram.
   b. Final Short-Circuit Study Report.
   c. Short-circuit study data files.
   d. Power system data
3. The following are from the Arc Flash Hazard Report:
   a. Provide maintenance procedures in equipment manuals according to requirements in NFPA 70E.
   b. Operation and Maintenance Procedures: In addition to items specified in Section 017823 "Operation and Maintenance Data," provide maintenance procedures for use by Owner's personnel that comply with requirements in NFPA 70E.

1.7 QUALITY ASSURANCE

A. Studies shall use computer programs that are distributed nationally and are in wide use. Software algorithms shall comply with requirements of standards and guides specified in this Section. Manual calculations are not acceptable.

B. Power Systems Analysis Specialist Qualifications: An entity experienced in the application of computer software used for studies, having performed successful studies of similar magnitude on electrical distribution systems using similar devices.
   1. Professional engineer, licensed in the state where Project is located, shall be responsible for the study. All elements of the study shall be performed under the direct supervision and control of engineer.

C. Comply with IEEE 242 for short-circuit currents and coordination time intervals.

D. Comply with IEEE 399 for general study procedures.

E. Field Adjusting Agency Qualifications:
   1. Employer of a NETA ETT-Certified Technician Level III or NICET Electrical Power Testing Level III certification responsible for all field adjusting of the Work.
   2. A member company of NETA.
   3. Acceptable to authorities having jurisdiction

PART 2 - PRODUCTS

2.1 COMPUTER SOFTWARE DEVELOPERS

A. Available Computer Software Developers: Subject to compliance with requirements, companies offering computer software programs that may be used in the Work include, but are not limited to, the following:

B. Computer Software Developers: Subject to compliance with requirements, provide products by one of the following:
   1. Operation Technology, Inc. (ETAP)
   2. SKM Systems Analysis, Inc.(Power Tools)

2.2 COMPUTER SOFTWARE PROGRAM REQUIREMENTS

A. Comply with IEEE 399, IEEE 1584 and NFPA 70E.

B. Analytical features of fault-current-study, device coordination study and arc flash study computer software program shall include "mandatory," "very desirable," and "desirable" features as listed in IEEE 399.

C. Computer software program shall be capable of plotting and diagramming time-current-characteristic curves as part of its output. Computer software program shall report device settings and ratings of all overcurrent protective devices and shall demonstrate selective coordination by computer-generated, time-current coordination plots.
   1. Optional Features:
      a. Arcing faults.
      b. Simultaneous faults.
      c. Explicit negative sequence.
      d. Mutual coupling in zero sequence.

PART 3 - EXECUTION

3.1 EXAMINATION

A. Examine Project overcurrent protective device submittals for compliance with electrical distribution system coordination requirements and other conditions affecting performance. Devices to be coordinated are indicated on Drawings.
   1. Proceed with coordination study only after relevant equipment submittals have been assembled. Overcurrent protective devices that have not been submitted and approved prior to coordination study may not be used in study.

3.2 POWER SYSTEM DATA

A. Gather and tabulate the following input data to support coordination study:

1. Product Data for overcurrent protective devices specified in other electrical Sections and involved in overcurrent protective device coordination studies. Use equipment designation tags that are consistent with electrical distribution system diagrams, overcurrent protective device submittals, input and output data, and recommended device settings.
2. Impedance of utility service entrance.
3. Electrical Distribution System Diagram: In hard-copy and electronic-copy formats, showing the following:
   a. Circuit-breaker and fuse-current ratings and types.
   b. Relays and associated power and current transformer ratings and ratios.
   c. Transformer kilovolt amperes, primary and secondary voltages, connection type, impedance, and X/R ratios.
   d. Generator kilovolt amperes, size, voltage, and source impedance.
   e. Cables: Indicate conduit material, sizes of conductors, conductor material, insulation, and length.
   f. Busway ampacity and impedance.
   g. Motor horsepower and code letter designation according to NEMA MG 1.
4. Data sheets to supplement electrical distribution system diagram, cross-referenced with tag numbers on diagram, showing the following:
   a. Special load considerations, including starting inrush currents and frequent starting and stopping.
   b. Transformer characteristics, including primary protective device, magnetic inrush current, and overload capability.
   c. Motor full-load current, locked rotor current, service factor, starting time, type of start, and thermal-damage curve.
   d. Generator thermal-damage curve.
   e. Ratings, types, and settings of utility company's overcurrent protective devices.
   f. Special overcurrent protective device settings or types stipulated by utility company.
   g. Time-current-characteristic curves of devices indicated to be coordinated.
   h. Manufacturer, frame size, interrupting rating in amperes rms symmetrical, ampere or current sensor rating, long-time adjustment range, short-time adjustment range, and instantaneous adjustment range for circuit breakers.
   i. Manufacturer and type, ampere-tap adjustment range, time-delay adjustment range, instantaneous attachment adjustment range, and current transformer ratio for overcurrent relays.
   j. Panelboards, switchboards, motor-control center ampacity, and interrupting rating in amperes rms symmetrical.

3.3 FAULT-CURRENT STUDY

A. Calculate the maximum available short-circuit current in amperes rms symmetrical at circuit-breaker positions of the electrical power distribution system. The calculation shall be for a current immediately after initiation and for a three-phase bolted short circuit at each of the following:
   1. Switchgear and switchboard bus.
   2. Medium-voltage controller.
   3. Motor-control center.
   4. Distribution panelboard.

5. Branch circuit panelboard.
6. <Insert significant locations in system.>

B. Study electrical distribution system from normal and alternate power sources throughout electrical distribution system for Project. Include studies of system-switching configurations and alternate operations that could result in maximum fault conditions.

C. Calculate momentary and interrupting duties on the basis of maximum available fault current according to IEEE 551.

D. Calculations to verify interrupting ratings of overcurrent protective devices shall comply with **IEEE 241** and IEEE 242.
   1. Transformers:
      a. ANSI C57.12.10.
      b. ANSI C57.12.22.
      c. ANSI C57.12.40.
      d. IEEE C57.12.00.
      e. IEEE C57.96.
   2. Medium-Voltage Circuit Breakers: IEEE C37.010.
   3. Low-Voltage Circuit Breakers: IEEE 1015 and IEEE C37.20.1.
   4. Low-Voltage Fuses: IEEE C37.46.

E. Study Report:
   1. Show calculated X/R ratios and equipment interrupting rating (1/2-cycle) fault currents on electrical distribution system diagram.
   2. Show interrupting (5-cycle) and time-delayed currents (6 cycles and above) on medium-voltage breakers as needed to set relays and assess the sensitivity of overcurrent relays.

F. Equipment Evaluation Report:
   1. For 600-V overcurrent protective devices, ensure that interrupting ratings are equal to or higher than calculated 1/2-cycle symmetrical fault current.
   2. For devices and equipment rated for asymmetrical fault current, apply multiplication factors listed in the standards to 1/2-cycle symmetrical fault current.
   3. Verify adequacy of phase conductors at maximum three-phase bolted fault currents; verify adequacy of equipment grounding conductors and grounding electrode conductors at maximum ground-fault currents. Ensure that short-circuit withstand ratings are equal to or higher than calculated 1/2-cycle symmetrical fault current.

3.4 COORDINATION STUDY

A. Perform coordination study using approved computer software program. Prepare a written report using results of fault-current study. Comply with IEEE 399.
   1. Calculate the maximum and minimum 1/2-cycle short-circuit currents.
   2. Calculate the maximum and minimum interrupting duty (5 cycles to 2 seconds) short-circuit currents.
   3. Calculate the maximum and minimum ground-fault currents.

B. Comply with IEEE 241 and IEEE 242 recommendations for fault currents and time intervals.

C. Transformer Primary Overcurrent Protective Devices:
   1. Device shall not operate in response to the following:
      a. Inrush current when first energized.
      b. Self-cooled, full-load current or forced-air-cooled, full-load current, whichever is specified for that transformer.
      c. Permissible transformer overloads according to IEEE C57.96 if required by unusual loading or emergency conditions.
   2. Device settings shall protect transformers according to IEEE C57.12.00, for fault currents.

D. Motors served by voltages more than 600 V shall be protected according to IEEE 620.

E. Conductor Protection: Protect cables against damage from fault currents according to ICEA P-32-382, ICEA P-45-482, and conductor melting curves in IEEE 242. Demonstrate that equipment withstands the maximum short-circuit current for a time equivalent to the tripping time of the primary relay protection or total clearing time of the fuse. To determine temperatures that damage insulation, use curves from cable manufacturers or from listed standards indicating conductor size and short-circuit current.

F. Coordination-Study Report: Prepare a written report indicating the following results of coordination study:
   1. Tabular Format of Settings Selected for Overcurrent Protective Devices:
      a. Device tag.
      b. Relay-current transformer ratios; and tap, time-dial, and instantaneous-pickup values.
      c. Circuit-breaker sensor rating; and long-time, short-time, and instantaneous settings.
      d. Fuse-current rating and type.
      e. Ground-fault relay-pickup and time-delay settings.
   2. Coordination Curves: Prepared to determine settings of overcurrent protective devices to achieve selective coordination. Graphically illustrate that adequate time separation exists between devices installed in series, including power utility company's upstream devices. Prepare separate sets of curves for the switching schemes and for emergency periods where the power source is local generation. Show the following information:
      a. Device tag.
      b. Voltage and current ratio for curves.
      c. Three-phase and single-phase damage points for each transformer.
      d. No damage, melting, and clearing curves for fuses.
      e. Cable damage curves.
      f. Transformer inrush points.
      g. Maximum fault-current cutoff point.

G. Completed data sheets for setting of overcurrent protective devices.

3.5 ARC-FLASH HAZARD ANALYSIS

A. Comply with NFPA 70E and its Annex D for hazard analysis study.

B. Preparatory Studies: Perform the Short-Circuit and Protective Device Coordination studies prior to starting the Arc-Flash Hazard Analysis.
   1. Short-Circuit Study Output: As specified in "Short-Circuit Study Output Reports" Paragraph in "Short-Circuit Study Report Contents" Article in Section 260573.~~13~~ "Short-Circuit Studies."
   2. Coordination Study Report Contents: As specified in "Coordination Study Report Contents" Article in Section 260573.~~16~~ "Coordination Studies."

C. Calculate maximum and minimum contributions of fault-current size.
   1. Maximum calculation shall assume a maximum contribution from the utility and shall assume motors to be operating under full-load conditions.
   2. Calculate arc-flash energy at 85 percent of maximum short-circuit current according to IEEE 1584 recommendations.
   3. Calculate arc-flash energy at 38 percent of maximum short-circuit current according to NFPA 70E recommendations.
   4. Calculate arc-flash energy with the utility contribution at a minimum and assume no motor contribution.

D. Calculate the arc-flash protection boundary and incident energy at locations in electrical distribution system where personnel could perform work on energized parts.

E. Include medium-and low-voltage equipment locations, except equipment rated 240 V ac or less fed from transformers less than 125 kVA.

F. Calculate the limited, restricted, and prohibited approach boundaries for each location.

G. Incident energy calculations shall consider the accumulation of energy over time when performing arc-flash calculations on buses with multiple sources. Iterative calculations shall take into account the changing current contributions, as the sources are interrupted or decremented with time. Fault contribution from motors and generators shall be decremented as follows:
   1. Fault contribution from induction motors shall not be considered beyond three to five cycles.
   2. Fault contribution from synchronous motors and generators shall be decayed to match the actual decrement of each as closely as possible (for example, contributions from permanent magnet generators will typically decay from 10 per unit to three per unit after 10 cycles).

H. Arc-flash energy shall generally be reported for the maximum of line or load side of a circuit breaker. However, arc-flash computation shall be performed and reported for both line and load side of a circuit breaker as follows:
   1. When the circuit breaker is in a separate enclosure.
   2. When the line terminals of the circuit breaker are separate from the work location.

I. Base arc-flash calculations on actual overcurrent protective device clearing time. Cap maximum clearing time at two seconds based on IEEE 1584, Section ~~B.1.2~~6.9.

3.6 ARC-FLASH STUDY REPORT CONTENT

A. Executive summary of study findings.

B. Study descriptions, purpose, basis, and scope. Include case descriptions, definition of terms, and guide for interpretation of results.

C. One-line diagram, showing the following:
   1. Protective device designations and ampere ratings.
   2. Conductor types, sizes, and lengths.
   3. Transformer kilovolt ampere (kVA) and voltage ratings, including derating factors and environmental conditions.
   4. Motor and generator designations and kVA ratings.
   5. Switchgear, switchboard, motor-control center, panelboard designations, and ratings.

D. Study Input Data: As described in "Power System Data" Article.

E. Short-Circuit Study Output Data: As specified in "Short-Circuit Study Output Reports" Paragraph in "Short-Circuit Study Report Contents" Article in Section 260573~~.13~~ "Short-Circuit Studies."

F. Protective Device Coordination Study Report Contents: As specified in "Coordination Study Report Contents" Article in Section 260573~~.16~~ "Coordination Studies."

G. Arc-Flash Study Output Reports:
   1. Interrupting Duty Report: Three-phase and unbalanced fault calculations, showing the following for each equipment location included in the report:
      a. Voltage.
      b. Calculated symmetrical fault-current magnitude and angle.
      c. Fault-point X/R ratio.
      d. No AC Decrement (NACD) ratio.
      e. Equivalent impedance.
      f. Multiplying factors for 2-, 3-, 5-, and 8-cycle circuit breakers rated on a symmetrical basis.
      g. Multiplying factors for 2-, 3-, 5-, and 8-cycle circuit breakers rated on a total basis.

H. Incident Energy and Flash Protection Boundary Calculations:
   1. Arcing fault magnitude.
   2. Protective device clearing time.
   3. Duration of arc.
   4. Arc-flash boundary.
   5. Restricted approach boundary.
   6. Limited approach boundary.
   7. Working distance.
   8. Incident energy.
   9. Hazard risk category.
   10. Recommendations for arc-flash energy reduction.

I. Fault study input data, case descriptions, and fault-current calculations including a definition of terms and guide for interpretation of computer printout.

3.7 ARC-FLASH WARNING LABELS

A. Comply with requirements in Section 260553 "Identification for Electrical Systems" for self-adhesive equipment labels. Produce a 3.5-by-5-inch (76-by-127-mm) self-adhesive equipment label for each work location included in the analysis.

B. Label shall have an orange header with the wording, "WARNING, ARC-FLASH HAZARD," and shall include the following information taken directly from the arc-flash hazard analysis:
   1. Location designation.
   2. Nominal voltage.
   3. Protection boundaries.
      a. Arc-flash boundary.
      b. Restricted approach boundary.
      c. Limited approach boundary.
   4. Arc flash PPE category.
   5. Required minimum arc rating of PPE in Cal/cm squared.
   6. Available incident energy.
   7. Working distance.
   8. Engineering report number, revision number, and issue date.

C. Labels shall be machine printed, with no field-applied markings.

D. Apply a label to each piece of equipment addresses by the study.

END OF SECTION 260573

SECTION 260913 - ELECTRICAL POWER MONITORING AND CONTROL

PART 1 - GENERAL

1.1 RELATED DOCUMENTS

A. Drawings and general provisions of the Contract, including General and Supplementary Conditions and Division 01 Specification Sections, apply to this Section.

1.2 SUMMARY

A. Section includes the following for monitoring **and control** of electrical power system:
   1. PC-based workstation(s) and software.
   2. Communication network and interface modules for RS-232, RS-485, Modbus TCP/IP, and IEEE 802.3 data transmission protocols.

B. Related Sections:
   1. Section 262713 "Electricity Metering" for equipment to meter electricity consumption and demand for tenant submetering.

1.3 DEFINITIONS

A. Ethernet: Local area network based on IEEE 802.3 standards.

B. Firmware: Software (programs or data) that has been written onto read-only memory (ROM). Firmware is a combination of software and hardware. Storage media with ROMs that have data or programs recorded on them are firmware.

C. HTML: Hypertext markup language.

D. I/O: Input/output.

E. KY Pulse: A term used by the metering industry to describe a method of measuring consumption of electricity that is based on a relay changing status in response to the rotation of the disk in the meter.

F. LAN: Local area network; sometimes plural as "LANs."

G. LCD: Liquid crystal display.

H. Low Voltage: As defined in NFPA 70 for circuits and equipment operating at less than 50 V or remote-control, signaling and power-limited circuits.

I. Modbus TCP/IP: An open protocol for exchange of process data.

J. Monitoring: Acquisition, processing, communication, and display of equipment status data, metered electrical parameter values, power quality evaluation data, event and alarm signals, tabulated reports, and event logs.

K. PC: Personal computer; sometimes plural as "PCs."

L. rms: Root-mean-square value of alternating voltage, which is the square root of the mean value of the square of the voltage values during a complete cycle.

M. RS-232: A TIA standard for asynchronous serial data communications between terminal devices.

N. RS-485: A TIA standard for multipoint communications using two twisted-pairs.

O. TCP/IP: Transport control protocol/Internet protocol incorporated into Microsoft Windows.

P. THD: Total harmonic distortion.

Q. UPS: Uninterruptible power supply; used both in singular and plural context.

R. WAN: Wide area network.

1.4 ACTION SUBMITTALS

A. Product Data: For each type of product indicated.
   1. Attach copies of approved Product Data submittals for products (such as switchboards and switchgear) that describe power monitoring and control features to illustrate coordination among related equipment and power monitoring and control.

B. Shop Drawings: For power monitoring and control equipment. Include plans, elevations, sections, details, and attachments to other work.
   1. Outline Drawings: Indicate arrangement of components and clearance and access requirements.
   2. Block Diagram: Show interconnections between components specified in this Section and devices furnished with power distribution system components. Indicate data communication paths and identify networks, data buses, data gateways, concentrators, and other devices to be used. Describe characteristics of network and other data communication lines.
   3. Detail equipment assemblies and indicate dimensions, weights, loads, required clearances, method of field assembly, components, and location and size of each field connection.
   4. Wiring Diagrams: For power, signal, and control wiring. Coordinate nomenclature and presentation with a block diagram.
   5. UPS sizing calculations for workstation.
   6. Surge Suppressors: Data for each device used and where applied.

C. Sustainable Design Submittals:
   1. Product Data: Indicating that computers used by the system are certified by ENERGY STAR.

1.5 INFORMATIONAL SUBMITTALS

A. Field quality-control reports.

B. Other Informational Submittals:
   1. Manufacturer's system installation and setup guides, with data forms to plan and record options and setup decisions.

1.6 CLOSEOUT SUBMITTALS

A. Operation and Maintenance Data: For power monitoring and control units, to include in emergency, operation, and maintenance manuals. In addition to items specified in Section 017823 "Operation and Maintenance Data," include the following:
   1. Operating and applications software documentation.
   2. Software licenses.
   3. Software service agreement.
   4. PC installation and operating documentation, manuals, and software for the PC and all installed peripherals. Software shall include system restore, emergency boot diskettes, and drivers for all installed hardware. Provide separately for each PC.
   5. Hard copies of manufacturer's specification sheets, operating specifications, design guides, user's guides for software and hardware, and PDF files on CD-ROM of the hard-copy submittal.

B. Software and Firmware Operational Documentation:
   1. Self-study guide describing the process for setting equipment's network address; setting Owner's options; procedures to ensure data access from any PC on the network, using a standard Web browser; and recommended firewall setup.
   2. Software operating and upgrade manuals.
   3. Software Backup: On a magnetic media or compact disc, complete with Owner-selected options.
   4. Device address list and the set point of each device and operator option, as set in applications software.
   5. Graphic file and print out of graphic screens and related icons, with legend.

C. Software Upgrade Kit: For Owner to use in modifying software to suit future power system revisions or power monitoring and control revisions.

D. Software licenses and upgrades required by and installed for operating and programming digital and analog devices.

1.7 MAINTENANCE MATERIAL SUBMITTALS

A. Furnish extra materials that match products installed and that are packaged with protective covering for storage and identified with labels describing contents.
   1. Addressable Relays: One for every **10** installed. Furnish at least one of each type.
   2. Data Line Surge Suppressors: One for every **10** of each type installed. Furnish at least one of each type.

3. I/O Protection Fuses: One for every **10** of each type installed. Furnish at least one of each type.

1.8 QUALITY ASSURANCE

A. Installer Qualifications: Manufacturer's authorized representative who is trained and approved for installation of units required for this Project.

B. Manufacturer Qualifications: A firm experienced in manufacturing power monitoring and control equipment similar to that indicated for this Project and with a record of successful in-service performance.

C. Electrical Components, Devices, and Accessories: Listed and labeled as defined in NFPA 70, by a qualified testing agency, and marked for intended location and application.

1.9 COORDINATION

A. Coordinate features of distribution equipment and power monitoring and control components to form an integrated interconnection of compatible components.
   1. Match components and interconnections for optimum performance of specified functions.

B. Coordinate Work of this Section with those in Sections specifying distribution components that are monitored or controlled by power monitoring and control equipment.

1.10 SOFTWARE SERVICE AGREEMENT

A. Technical Support: Beginning with Substantial Completion, provide software support for **two** years.

B. Upgrade Service: Update software to latest version at Project completion. Install and program software upgrades that become available within **two** years from date of Substantial Completion. Upgrading software shall include the operating systems. Upgrade shall include new or revised licenses for use of software.
   1. Provide 30 days' notice to Owner to allow scheduling and access to system and to allow Owner to upgrade computer equipment if necessary.

PART 2 - PRODUCTS

2.1 MANUFACTURERS

A. Basis-of-Design Product: Subject to compliance with requirements, provide [**product indicated on Drawings**] <**Insert manufacturer's name; product name or designation**> or comparable product by one of the following:
   1. Eaton Corporation; Cutler-Hammer products.
   2. General Electric Company; GE Consumer & Industrial.
   3. Landis+Gyr Inc.
   4. Rockwell Automation, Inc.; Allen-Bradley brand.
   5. Schneider Electric - Power Management Operation.

2.2 FUNCTIONAL DESCRIPTION

A. Instrumentation and Recording Devices: Monitor and record load profiles and chart energy consumption patterns.
   1. Calculate and Record the Following:
      a. Load factor.
      b. Peak demand periods.
   2. Measure and Record Metering Data for the Following:
      a. Electricity.

B. Software: Calculate allocation of utility costs.
   1. Automatically Import Energy Usage Records to Allocate Energy Costs.

C. Power Quality Monitoring: Identify power system anomalies and measure, display, and record trends and alarms of the following power quality parameters:
   1. Voltage regulation and unbalance.
   2. Continuous three-phase rms voltage.
   3. Periodic max./min./avg. voltage samples.
   4. Harmonics.
   5. Voltage excursions.

D. Emergency Load Shedding. Preserve critical loads or avoid total shutdown due to unforeseen loss of power sources according to the following logic:
   1. Determine system topology.
   2. Evaluate remaining loads and sources.
   3. Shed loads in less than 100 ms.

E. Demand Management:
   1. Peaking or co-generator control.
   2. Load interlocking.
   3. Load shedding.
   4. Load trimming.

F. System: Report equipment status and power system control.

2.3 SYSTEM REQUIREMENTS

A. Monitoring and Control System: Include **multiple PC-based workstations with graphics capability and Web access**, with its operating system and application software, connected to data transmission network.

B. Surge Protection: For external wiring of each conductor entry connection to components to protect components from voltage surges originating external to equipment housing and entering through power, communication, signal, control, or sensing leads.

1. Minimum Protection for Power Lines 120 V and More: Auxiliary panel suppressors complying with requirements in Section 264313 "Surge Protection for Low-Voltage Electrical Power Circuits."
2. Minimum Protection for Communication, Signal, Control, and Low-Voltage Power Lines: Comply with requirements as recommended by manufacturer for type of line being protected.

C. Addressable Devices: All transmitters and receivers shall communicate unique device identification and status reports to monitoring and control clients.

D. DDC ~~BAS~~ Interface: Provide factory-installed hardware and software to enable the DDC ~~BAS~~ to monitor, display, and record data for use in processing reports.
1. Hardwired Monitoring Points: Electrical power demand (kilowatts), electrical power consumption (kilowatt-hours)**, power factor**
2. **ASHRAE 135 (BACnet)**, **LonTalk**, **Modbus**, **Industry-accepted, open-protocol**, communication interface with the DDC ~~BAS~~ shall enable the DDC ~~BAS~~ operator to remotely monitor meter information from a DDC ~~BAS~~ operator workstation. Control features and monitoring points displayed locally at metering panel shall be available through the DDC BAS.

2.4 OPERATING SYSTEM

A. Software: Configured to run on a portable laptop computer, a single PC, or a tablet ~~palm~~ computer, with capability for accessing a single meter at a time. System is not connected to a LAN. Modbus TCP/IP, RS-232, and RS-485 digital communications.

B. Software: Configured to run on a single PC, with capability for accessing multiple devices simultaneously. Modbus TCP/IP, RS-232, and RS-485 digital communications.

C. Software: Configured for a server and multiple client PCs, each with capability for accessing multiple devices simultaneously. Ethernet, Modbus TCP/IP, RS-232, and RS-485 digital communications.

D. Software: Configured for a server and multiple client PCs, each with capability for accessing multiple devices simultaneously. Software shall include interactive graphics client and shall be Web enabled. Workstations and portable computers shall not require any software except for an Internet browser to provide connectivity and full functionality. Include a firewall recommended by manufacturer. 100 Base-T Ethernet, Modbus TCP/IP RS-232, and RS-485 digital communications.

E. Operating System Software: Software shall have the following features:
1. Multiuser and multitasking to allow independent activities and monitoring to occur simultaneously at different workstations.
2. Graphical user interface to show pull-down menus and a menu tree format.
3. Capability for future additions within the indicated system size limits.

2.5 APPLICATIONS SOFTWARE

A. Basic Requirements:
   1. Fully compatible with and based on the approved operating system.
   2. Password-protected operator login and access; three levels, minimum.
   3. Password-protected setup functions.
   4. Context-sensitive online help.
   5. Capability of creating, deleting, and copying files; and automatically maintaining a directory of all files, including size and location of each sequential and random-ordered record.
   6. Capability for importing custom icons into graphic views to represent alarms and I/O devices.
   7. Automatic and encrypted backups for database and history; automatically stored and encrypted with a nine-character alphanumeric password, which must be used to restore or read data contained in backup.
   8. Operator audit trail for recording and reporting all changes made to user-defined system options.

B. Operator audit trail for recording and reporting all changes made to user-defined system options.Workstation Server Functions:
   1. Support other client PCs on the LAN.
   2. Maintain recorded data in databases accessible from other PCs on the LAN.

C. Data Formats:
   1. User-programmable export and import of data to and from commonly used spreadsheet, database, billing, and other applications; using dynamic data exchange technology.
   2. Option to convert reports and graphics to HTML format.
   3. Interactive graphics.
   4. Option to send preprogrammed or operator designed e-mail reports.

D. Metered Data: Display metered values in real time.

E. Remote Control:
   1. Display circuit-breaker status and allow breaker control.
   2. User defined with load-shedding automatically initiated and executed schemes responding to programmed time schedules, set points of metered demands, utility contracted load shedding, or combinations of these.

F. Equipment Documentation: Database for recording of equipment ratings and characteristics; with capability for graphic display on monitors.

G. Graphics: Interactive color-graphics platform with pull-down menus and mouse-driven generation of power system graphics, in formats widely used for such drafting; to include the following:
   1. Site plan.
   2. Floor plans.
   3. Equipment elevations.
   4. Single-line diagrams.

H. User-Defined Monitoring and Control Events: Display and record with date and time stamps accurate to 0.1 second, and including the following:
   1. Operator log on/off.
   2. Attempted operator log on/off.
   3. All alarms.
   4. Equipment operation counters.
   5. Out-of-limit, pickup, trip, and no-response events.

I. Trending Reports: Display data acquired in real-time from different meters or devices, in historical format over user-defined time; unlimited as to interval, duration, or quantity of trends.
   1. Spreadsheet functions of sum, delta, percent, average, mean, standard deviation, and related functions applied to recorded data.
   2. Charting, statistical, and display functions of standard Windows-based spreadsheet.

J. Alarms: Display and record alarm messages from discrete input and controls outputs, according to user programmable protocol.
   1. Functions requiring user acknowledgment shall run in background during computer use for other applications and override other presentations when they occur.

K. Data Sharing: Allow export of **recorded displays and** tabular data to third-party applications software.
   1. Tabular data shall be in the comma-separated values.

L. Activity Billing Software:
   1. Automatically compute and prepare activity demand and energy-use statements based on metering of energy use and peak demand integrated over user-defined interval.
   2. Intervals shall be same as used by electric utilities, including current vendor.
   3. Import metered data from saved records that were generated by metering and monitoring software.
   4. Maintain separate directory for each activity's historical billing information.
   5. Prepare summary reports in user-defined formats and time intervals.

M. Reporting: User commands initiate the reporting of a list of current alarm, supervisory, and trouble conditions in system or a log of past events.
   1. Print a record of user-defined alarm, supervisory, and trouble events on workstation printer.
   2. Sort and report by device name and by function.
   3. Report type of signal (alarm, supervisory, or trouble), description, date, and time of occurrence.
   4. Differentiate alarm signals from other indications.
   5. When system is reset, report reset event with same information concerning device, location, date, and time.

N. Display Monitor:
   1. Backlighted LCD to display metered data with touch-screen selecting device.
   2. Touch-screen display shall be a minimum 12-inch diagonal, resolution of 800 by 600 RGB pixels, 256 colors; NEMA 250, Type 1 display enclosure.
   3. Display four values on one screen at same time.

2.6 COMMUNICATION COMPONENTS AND NETWORKS

A. Network Configuration: High-speed, multi-access, open nonproprietary, industry standard communication protocol; LANs complying with EIA 485, 100 Base-T Ethernet, and Modbus TCP/IP.

2.7 POWER MONITORS

A. Separately mounted, permanently installed instrument for power monitoring and control, complying with UL 1244.
   1. Enclosure: NEMA 250, Type **1.**

B. Environmental Conditions: System components shall be capable of withstanding the following environmental conditions without mechanical or electrical damage or degradation of operating capability:
   1. Indoor installation in non-air-conditioned spaces that have environmental controls to maintain ambient conditions of 0 to 122 deg F (minus 18 to plus 50 deg C) dry bulb and 20 to 90 percent relative humidity, noncondensing.

C. rms Real-Time Measurements:
   1. Current: Each phase, neutral, average of three phases, percent unbalance.
   2. Voltage: Line-to-line each phase, line-to-line average of three phases, line-to-neutral each phase, line-to-neutral average of three phases, line-to-neutral percent unbalance.
   3. Power: Per phase and three-phase total.
   4. Reactive Power: Per phase and three-phase total.
   5. Apparent Power: Per phase and three-phase total.
   6. Power Factor: Per phase and three-phase total.
   7. Displacement Power Factor: Per phase and three-phase total.
   8. Frequency.
   9. THD: Current and voltage.
   10. Accumulated Energy: Real kWh, reactive kVARh, apparent kVAh (signed/absolute).
   11. Incremental Energy: Real kWh, reactive kVARh, apparent kVAh (signed/absolute).
   12. Conditional Energy: Real kWh, reactive kVARh, apparent kVAh (signed/absolute).

D. Demand Current Calculations, per Phase, Three-Phase Average and Neutral:
   1. Present.
   2. Running average.
   3. Last completed interval.
   4. Peak.

E. Demand Real Power Calculations, Three-Phase Total:
   1. Present.
   2. Running average.
   3. Last completed interval.
   4. Predicted.
   5. Peak.
   6. Coincident with peak kVA demand.
   7. Coincident with kVAR demand.

F. Demand Reactive Power Calculations, Three-Phase Total:
   1. Present.
   2. Running average.
   3. Last completed interval.
   4. Predicted.
   5. Peak.
   6. Coincident with peak kVA demand.
   7. Coincident with kVAR demand.

G. Demand Apparent Power Calculations, Three-Phase Total:
   1. Present.
   2. Running average.
   3. Last completed interval.
   4. Predicted.
   5. Peak.
   6. Coincident with peak kVA demand.
   7. Coincident with kVAR demand.

H. Average Power Factor Calculations, Demand Coincident, Three-Phase Total:
   1. Last completed interval.
   2. Coincident with kW peak.
   3. Coincident with kVAR peak.
   4. Coincident with kVA peak.

I. Power Analysis Values:
   1. THD, Voltage and Current: Per phase, three phase, and neutral.
   2. Displacement Power Factor: Per phase, three phase.
   3. Fundamental Voltage, Magnitude and Angle: Per phase.
   4. Fundamental Currents, Magnitude and Angle: Per phase.
   5. Fundamental Real Power: Per phase, three phase.
   6. Fundamental Reactive Power: Per phase.
   7. Harmonic Power: Per phase, three phase.
   8. Phase rotation.
   9. Unbalance: Current and voltage.
   10. Harmonic Magnitudes and Angles for Current and Voltages: Per phase, up to **31st** harmonic.

J. Power Demand Calculations: According to one of the following calculation methods, selectable by the user:
   1. Thermal Demand: Sliding window updated every second for the present demand and at end of the interval for the last interval. Adjustable window that can be set in 1-minute intervals, from 1 to 60 minutes.
   2. Block Interval with Optional Subintervals: Adjustable for 1-minute intervals, from 1 to 60 minutes. User-defined parameters for the following block intervals:
      a. Sliding block that calculates demand every second, with intervals less than 15 minutes, and every 15 seconds with an interval between 15 and 60 minutes.
      b. Fixed block that calculates demand at end of the interval.
      c. Rolling block subinterval that calculates demand at end of each subinterval and displays it at end of the interval.
   3. Demand Calculation Initiated by a Synchronization Signal:

a. Signal is a pulse from an external source. Demand period begins with every pulse. Calculation shall be configurable as either a block or rolling block calculation.
b. Signal is a communication signal. Calculation shall be configurable as either a block or rolling block calculation.
c. Demand can be synchronized with clock in the power meter.

K. Sampling:
1. Current and voltage shall be digitally sampled at a rate high enough to provide accuracy to 63rd harmonic of 60-Hz fundamental.
2. Power monitor shall provide continuous sampling at a rate of **128** samples per cycle on all voltage and current channels in the meter.

L. Minimum and Maximum Values: Record monthly minimum and maximum values, including date and time of record. For three-phase measurements, identify phase of recorded value. Record the following parameters:
1. Line-to-line voltage.
2. Line-to-neutral voltage.
3. Current per phase.
4. Line-to-line voltage unbalance.
5. Line-to-neutral voltage unbalance.
6. Power factor.
7. Displacement power factor.
8. Total power.
9. Total reactive power.
10. Total apparent power.
11. THD voltage L-L.
12. THD voltage L-N.
13. THD current.
14. Frequency.

M. Harmonic Calculation: Display and record the following:
1. Harmonic magnitudes and angles for each phase voltage and current through **31st** harmonic. Calculate for all three phases, current and voltage, and residual current. Current and voltage information for all phases shall be obtained simultaneously from same cycle.
2. Harmonic magnitude reported as a percentage of the fundamental or as a percentage of rms values, as selected by user.

N. Current and Voltage Ratings:
1. Designed for use with current inputs from standard instrument current transformers with 5-A secondary and shall have a metering range of 0-10 A.
2. Withstand ratings shall not be less than 15 A, continuous; 50 A, lasting over 10 seconds, no more frequently than once per hour; 500 A, lasting 1 second, no more frequently than once per hour.
3. Designed for use with voltage inputs from standard instrument potential transformers with a 120-V secondary.

O. Accuracy:
1. Comply with ANSI C12.20, Class 0.5; and IEC 60687, Class 0.5 for revenue meters. Accuracy from Light to Full Rating shall meet the following criteria:

a. Power: Accurate to 0.25 percent of reading, plus 0.025 percent of full scale.
b. Voltage and Current: Accurate to 0.075 percent of reading, plus 0.025 percent of full scale.
c. Power Factor: Plus or minus 0.002, from 0.5 leading to 0.5 lagging.
d. Frequency: Plus or minus 0.01 Hz at 45 to 67 Hz.

2. For meters that are circuit-breaker accessories, metering accuracy at full-scale shall not be less than the following:
   a. Current: Plus or minus 2.5 percent.
   b. Voltage: Plus or minus 1.5 percent.
   c. Energy, Demand, and Power: Plus or minus 4.0 percent.
   d. Frequency: Plus or minus 1 Hz.

P. Waveform Capture:
1. Capture and store steady-state waveforms of voltage and current channels; initiated manually. Each capture shall be for **3** cycles, **128** data points for each cycle, allowing resolution of harmonics to **31st** harmonic of basic 60 Hz.
2. Store captured waveforms in internal nonvolatile memory; available for PC display, archiving, and analysis.

Q. Input: **One** digital input signal(s).
1. Normal mode for on/off signal.
2. Demand interval synchronization pulse, accepting a demand synchronization pulse from a utility demand meter.
3. Conditional energy signal to control conditional energy accumulation.

R. Outputs:
1. Operated either by user command sent via communication link or set to operate in response to user-defined alarm or event.
2. Closed in either a momentary or latched mode as defined by user.
3. Each output relay used in a momentary contact mode shall have an independent timer that can be set by user.
4. One digital KY pulse to a user-definable increment of energy measurement. Output ratings shall be up to 120-V ac, 300-V dc, 50 mA, and provide 3500-V rms isolation.
5. **One** relay output module(s), providing a load voltage range from 20- to 240-V ac or from 20- to 30-V dc, supporting a load current of 2 A.
6. Output Relay Control:
   a. Relay outputs shall operate either by user command sent via communication link or in response to user-defined alarm or event.
   b. Normally open and normally closed contacts, field configured to operate as follows:
      1) Normal contact closure where contacts change state for as long as signal exists.
      2) Latched mode when contacts change state on receipts of a pickup signal; changed state is held until a dropout signal is received.
      3) Timed mode when contacts change state on receipt of a pickup signal; changed state is held for a preprogrammed duration.
      4) End of power demand interval when relay operates as synchronization pulse for other devices.
      5) Energy Pulse Output: Relay pulses quantities used for absolute kWh, absolute kVARh, kVAh, kWh In, kVARh In, kWh Out, and kVARh Out.

6) Output controlled by multiple alarms using Boolean-type logic.

S. Onboard Data Logging:
1. Store logged data, alarms, events, and waveforms in **800** KB of onboard nonvolatile memory.
2. Stored Data:
   a. Billing Log: User configurable; data shall be recorded every 15 minutes, identified by month, day, and 15-minute interval. Accumulate 24 months of monthly data, 32 days of daily data, and between 2 and 52 days of 15-minute interval data, depending on number of quantities selected.
   b. Custom Data Logs: **One** user-defined log(s) holding up to 96 parameters. Date and time stamp each entry to the second and include the following user definitions:
      1) Schedule interval.
      2) Event definition.
      3) Configured as "fill-and-hold" or "circular, first-in first-out."
   c. Alarm Log: Include time, date, event information, and coincident information for each defined alarm or event.
   d. Waveform Log: Store captured waveforms configured as "fill-and-hold" or "circular, first-in first-out."
3. Default values for all logs shall be initially set at factory, with logging to begin on device power up.

T. Alarms.
1. User Options:
   a. Define pickup, dropout, and delay.
   b. Assign one of four severity levels to make it easier for user to respond to the most important events first.
   c. Allow for combining up to four alarms using Boolean-type logic statements for outputting a single alarm.
2. Alarm Events:
   a. Over/undercurrent.
   b. Over/undervoltage.
   c. Current imbalance.
   d. Phase loss, current.
   e. Phase loss, voltage.
   f. Voltage imbalance.
   g. Over kW demand.
   h. Phase reversal.
   i. Digital input off/on.
   j. End of incremental energy interval.
   k. End of demand interval.

U. Control Power: 90- to 457-V ac or 100- to 300-V dc.

V. Communications:
1. Power monitor shall be permanently connected to communicate via RS-485 Modbus TCP/IP.
2. Local plug-in connections shall be for RS-232 and 100 Base-T Ethernet.

W. Display Monitor:

a. Backlighted LCD to display metered data with touch-screen selecting device.
b. Touch-screen display shall be a minimum 12-inch diagonal, resolution of 800 by 600 RGB pixels, 256 colors; NEMA 250, Type 1 display enclosure.

2. Display **four** values on one screen at same time.
   a. Current, per phase rms, three-phase average **and neutral**.
   b. Voltage, phase to phase, phase to neutral, and three-phase averages of phase to phase and phase to neutral.
   c. Real power, per phase and three-phase total.
   d. Reactive power, per phase and three-phase total.
   e. Apparent power, per phase and three-phase total.
   f. Power factor, per phase and three-phase total.
   g. Frequency.
   h. Demand current, per phase and three-phase average.
   i. Demand real power, three-phase total.
   j. Demand apparent power, three-phase total.
   k. Accumulated energy (MWh and MVARh).
   l. THD, current and voltage, per phase.
3. Reset: Allow reset of the following parameters at the display:
   a. Peak demand current.
   b. Peak demand power (kW) and peak demand apparent power (kVA).
   c. Energy (MWh) and reactive energy (MVARh).

2.8 RS-232 ASCII INTERFACE

A. ASCII interface shall allow RS-232 connections to be made between a meter or circuit monitor operating as the host PC and any equipment that will accept RS-232 ASCII command strings, such as [**local display panels**] [**dial-up modems**][**and alarm transmitters**] <**Insert device**>.

B. Pager System Interface: Alarms shall be able to activate a pager system with customized message for each input alarm.
   1. RS-232 output shall be capable of connection to a pager interface that can be used to call a paging system or service and send a signal to a portable pager. System shall allow an individual alphanumeric message per alarm input to be sent to paging system. This interface shall support both numeric and alphanumeric pagers.

C. Alarm System Interface:
   1. RS-232 output shall be capable of transmitting alarms from other monitoring and alarm systems to workstation software.

D. Cables:
   1. PVC-Jacketed, RS-232 Cable: Paired, 2 pairs, No. 22 AWG, stranded (7x30) tinned copper conductors, polypropylene insulation, and individual aluminum foil-polyester tape shielded pairs with 100 percent shield coverage; PVC jacket. Pairs are cabled on common axis with No. 24 AWG, stranded (7x32) tinned copper drain wire.
      a. NFPA 70, Type CM.
      b. Flame Resistance: UL 1581, Vertical Tray.
   2. Plenum-Type, RS-232 Cable: Paired, 2 pairs, No. 22 AWG, stranded (7x30) tinned copper conductors, plastic insulation, and individual aluminum foil-polyester tape

shielded pairs with 100 percent shield coverage; plastic jacket. Pairs are cabled on common axis with No. 24 AWG, stranded (7x32) tinned copper drain wire.
a. NFPA 70, Type CMP.
b. Flame Resistance: NFPA 262, Flame Test.

2.9 LAN CABLES

A. Comply with Section 271500 "Communications Horizontal Cabling."

B. RS-485 Cable:
1. PVC-Jacketed, RS-485 Cable: Paired, 2 pairs, twisted, No. 22 AWG, stranded (7x30) tinned copper conductors, PVC insulation, unshielded, PVC jacket, and NFPA 70, Type CMG.
2. Plenum-Type, RS-485 Cable: Paired, 2 pairs, No. 22 AWG, stranded (7x30) tinned copper conductors, fluorinated-ethylene-propylene insulation, unshielded, and fluorinated-ethylene-propylene jacket, and NFPA 70, Type CMP.

C. Unshielded Twisted Pair Cables: Category [**5e**] [**6**] as specified for horizontal cable for data service in Section 271500 "Communications Horizontal Cabling."

2.10 LOW-VOLTAGE WIRING

A. Comply with Section 260523 "Control-Voltage Electrical Power Cables."

B. Low-Voltage Control Cable: Multiple conductor, color-coded, No. 20 AWG copper, minimum.
1. Sheath: PVC; except in plenum-type spaces, use sheath listed for plenums.
2. Ordinary Switching Circuits: Three conductors unless otherwise indicated.
3. Switching Circuits with Pilot Lights or Locator Feature: Five conductors unless otherwise indicated.

PART 3 - EXECUTION

3.1 EXAMINATION

A. Examine pathway elements intended for cables. Check raceways, cable trays, and other elements for compliance with space allocations, installation tolerances, hazards to cable installation, and other conditions affecting installation.
1. Proceed with installation only after unsatisfactory conditions have been corrected.

3.2 CABLING

A. Comply with NECA 1.

B. Install cables and wiring according to requirements in Section 271500 "Communications Horizontal Cabling."

C. Wiring Method: Install wiring in raceway and cable tray except within consoles, cabinets, desks, and counters. Conceal raceway and wiring except in unfinished spaces.

D. Wiring Method: Install wiring in raceway and cable tray except within consoles, cabinets, desks, and counters and except in accessible ceiling spaces and in gypsum board partitions where unenclosed wiring method may be used. Use NRTL-listed plenum cable in environmental air spaces, including plenum ceilings. Conceal raceway and cables except in unfinished spaces.

E. Install LAN cables using techniques, practices, and methods that are consistent with specified category rating of components and that ensure specified category performance of completed and linked signal paths, end to end.

F. Install cables without damaging conductors, shield, or jacket.

3.3 IDENTIFICATION

A. Identify components and power and control wiring according to Section 260553 "Identification for Electrical Systems."

B. Label each power monitoring and control module with a unique designation.

3.4 GROUNDING

A. Comply with IEEE 1100, "Recommended Practice for Powering and Grounding Electronic Equipment."

3.5 FIELD QUALITY CONTROL

A. Testing Agency: **Engage** a qualified testing agency to perform tests and inspections.

B. Manufacturer's Field Service: Engage a factory-authorized service representative to inspect**,** test, and adjust components, assemblies, and equipment installations, including connections.

C. Perform tests and inspections.
   1. Manufacturer's Field Service: Engage a factory-authorized service representative to inspect components, assemblies, and equipment installations, including connections, and to assist in testing.

D. Tests and Inspections:
   1. Electrical Tests: Use caution when testing devices containing solid-state components.
   2. Continuity tests of circuits.
   3. Operational Tests: Set and operate controls at workstation and at monitored and controlled devices to demonstrate their functions and capabilities. Use a methodical sequence that cues and reproduces actual operating functions as recommended by manufacturer. Submit sequences for approval. Note response to each test command and

operation. Note time intervals between initiation of alarm conditions and registration of alarms at central-processing workstation.

a. Coordinate testing required by this Section with that required by Sections specifying equipment being monitored and controlled.
b. Test LANs according to requirements in Section 271500 "Communications Horizontal Cabling."
c. System components with battery backup shall be operated on battery power for a period of not less than 10 percent of calculated battery operating time.
d. Verify accuracy of graphic screens and icons.
e. Metering Test: Load feeders, measure loads on feeder conductor with a rms reading clamp-on ammeter, and simultaneously read indicated current on the same phase at central-processing workstation. Record and compare values measured at the two locations. Resolve discrepancies greater than 5 percent and record resolution method and results.
f. Record metered values, control settings, operations, cues, time intervals, and functional observations and submit test reports printed by workstation printer.

E. Power monitoring and control equipment will be considered defective if it does not pass tests and inspections.

F. Prepare test and inspection reports.

G. Correct deficiencies make necessary adjustments, and retest. Verify that specified requirements are met.

H. Test Labeling: After satisfactory completion of tests and inspections, apply a label to tested components indicating test results, date, and responsible agency and representative.

I. Reports: Written reports of tests and observations. Record defective materials and workmanship and unsatisfactory test results. Record repairs and adjustments.

J. Remove and replace malfunctioning devices and circuits and retest as specified above.

3.6 DEMONSTRATION

A. **Engage a factory-authorized service representative to train** Owner's maintenance personnel to adjust, operate, and maintain systems. See Section 017900 "Demonstration and Training."
1. Train Owner's management and maintenance personnel in interpreting and using monitoring displays and in configuring and using software and reports. Include troubleshooting, servicing, adjusting, and maintaining equipment. Provide a minimum of **12** hours' training.
2. Training Aid: Use approved final versions of software and maintenance manuals as training aids.

3.7 ON-SITE ASSISTANCE

A. Occupancy Adjustments: When requested within 12 months of date of Substantial Completion, provide on-site assistance in adjusting system to suit actual occupied conditions. Provide up to

three visits to Project during other-than-normal occupancy hours for this purpose. Include necessary field meetings with service representatives PG&E Electrical Utility, Switchboard Manufacturer Energy Control Systems vendor.

END OF SECTION 260913

SECTION 260943 – NETWORK LIGHTING CONTROLS

PART 1 - GENERAL

1.1 SUMMARY

A. Section includes a networked lighting control system comprised of the following components
   1. System Software Interfaces
      a. Management Interface
      b. Historical Database and Analytics Interface
      c. Visualization Interface
      d. Personal Control Applications
      e. Smartphone Programming Interface for wired devices
   2. System Backbone and Integration Equipment
      a. System Controller
      b. OpenADR Interface
   3. Wired Networked Devices
      a. Wall Switches, Dimmers and Scene Controllers
      b. Graphic Wallstations
      c. Auxiliary Input/Output Devices
      d. Occupancy and Photocell Sensors
      e. Wall Switch Sensors
      f. Embedded Sensors
      g. Power Packs and Secondary Packs
      h. Networked Luminaires
      i. Relay and Dimming Panel
      j. Bluetooth® Low Energy Programming Device
      k. Communication Bridge
   4. Wireless Mesh Networked Devices
      a. Sensor Interface
      b. Light Controllers
      c. Digital Sensor Attachments
      d. Sensor-Controllers
      e. Networked Luminaires
      f. Communication Bridge
   5. Wireless Dual-Band Networked Devices
      a. Wall Switches and Dimmers
      b. Scene Controllers
      c. Embedded Sensor-Controllers
      d. Distributed Control Nodes
      e. Power Packs and Secondary Packs
      f. Networked Luminaires
      g. Communication Adapter
   6. The networked lighting control system shall meet all of the characteristics and performance requirements specified herein.
   7. The contractor shall provide, install and verify proper operation of all equipment necessary for proper operation of the system as specified herein and as shown on applicable drawings.

1.2 RELATED DOCUMENTS

A. Section 26 27 26 Wiring Devices

B. Section 26 51 13 Interior Lighting Fixtures

1.3 SUBMITTALS

A. Submittal shall be provided including the following items.
   1. Bill of Materials necessary to install the networked lighting control system.
   2. Product Specification Sheets indicating general device descriptions, dimensions, electrical specifications, wiring details, and nomenclature.
   3. Riser Diagrams showing device wiring connections of system backbone and floor plans pertinent to the specific project. Engineers design drawings returned back to the Engineer for review are not acceptable.
      a. Information Technology (IT) connection information pertaining to interconnection with facility IT networking equipment and third-party systems. The list shall include a checklist with all required information needed from the IT and required dates.
      b. Diagrams and Operational Descriptions to indicate system operation or interaction with other system(s).
      c. Contractor Startup/Commissioning Worksheet (must be completed prior to factory startup).
      d. Service Specification Sheets indicating general service descriptions, including startup, training, post-startup support, and service contract terms.
      e. Hardware and Software Operation Manuals.

1.4 APPROVALS

A. Prior approval from owner's representative is required for products or systems manufactured by companies not specified in the Network Lighting Controls section of this specification.

B. Any alternate product or system that has not received prior approval from the owner's representative at least 10 days prior to submission of a proposal package shall be rejected.

C. Alternate products or systems require submission of catalog datasheets, system overview documents and installation manuals to owner's representative. The submittal shall include significant differences between the specified product and the alternate.

1.5 QUALITY ASSURANCE

A. Product Qualifications
   1. System electrical components shall be listed or recognized by a nationally recognized testing laboratory (e.g., UL, ETL, or CSA) and shall be labeled with required markings as applicable.
   2. System luminaires and controls shall be designed and manufactured for interoperability.
   3. All components shall be subjected to 100% end of line testing prior to shipment to the project site to ensure proper device operation.

4. All components and the manufacturing facility where product was manufactured must be RoHS compliant.

B. Installation and Startup Qualifications
1. System start-up shall be performed by qualified personnel approved or certified by the manufacturer.

C. Service and Support Requirements
1. Phone Support: Toll free technical support shall be available.
2. Remote Support: The bidder shall offer a remote support capability.
3. Onsite Support: The bidder shall offer onsite support that is billable at whole day rates.
4. Service Contract: The bidder shall offer a Service Contract that packages phone, remote, and onsite support calls for the project. Response times for each type of support call shall be indicated in the terms of the service contract included in the bid package.

1.6 PROJECT CONDITIONS

A. Only install equipment after the following site conditions are maintained:
1. {USC}Ambient Temperature: 14 to 105˚F.{USC}
2. Relative Humidity: less than 90% non-condensing

B. Equipment shall not be subjected to dust, debris, moisture, or temperature and humidity conditions exceeding the requirements indicated above, at any point prior to installation.

C. Only properly rated equipment and enclosures, installed per the manufacturer's instructions, may be subjected to dust and moisture following installation.

1.7 WARRANTY

A. The manufacturer shall provide a minimum five-year warranty on all hardware devices supplied and installed. Warranty coverage shall begin on the date of shipment.

B. The hardware warranty shall cover repair or replacement, including programming, any defective products within the warranty period.

1.8 MAINTENANCE & SUSTAINABILITY

A. The manufacturer shall make available to the owner new parts, upgrades, and/or replacements available for a minimum of 5 years following installation.

PART 2 - EQUIPMENT

2.1 MANUFACTURERS

A. Acceptable Manufacturers:
1. nLight, Acuity Brands Lighting, Inc.

2. Encellium
3. WattStopper
4. nLight, Acuity Brands Lighting, Inc.
5. Enlighted
6. Lutron Vive

B. Basis of Design System: Acuity Controls nLight

C. Basis of BAS Control Integration: Distech Controls ECLYPSE

2.2 SYSTEM COMPLIANCE

A. System components shall comply with UL 916 and UL 924 standards where applicable.

B. System components shall comply with CFR Title 47, Part 15 standards where applicable.

C. All equipment shall be installed and connected in compliance with NFPA 70.

2.3 SYSTEM PERFORMANCE REQUIREMENTS

A. System Architecture
1. System shall have an architecture that is based upon three main concepts: (1) networkable intelligent lighting control devices, (2) standalone lighting control zones using distributed intelligence, (3) optional system backbone for remote, time based and global operation between control zones.
2. Intelligent lighting control devices shall have individually addressable network communication capability and consist of one or more basic lighting control components: occupancy sensor, photocell sensor, relay, dimming output, contact closure input, analog 10V input, and manual wallstation capable of indicating switching, dimming, and/or scene control. Combining one or more of these components into a single device enclosure shall be permissible so as to minimize overall device count of system.
3. System must be capable of interfacing directly with networked luminaires such that either low voltage network cabling or wireless RF communication is used to interconnect networked luminaires with control components such as sensors, switches and system backbone (see Control Zone Characteristics sections for each type of network connection, wired or wireless).
4. Lighting control zones consisting of one or more networked luminaires and intelligent lighting control devices and shall be capable of providing automatic control from sensors (occupancy and/or photocell) and manual control from local wallstations without requiring connection to a higher level system backbone; this capability is referred to as “distributed intelligence.”
   a. Lighting control zones (wired and wireless) of at least 128 devices per zone shall be supported.
5. The system shall be capable of providing individually addressable switching and dimming control of the following: networked luminaires, control zones, and relay and dimming outputs from centralized panels to provide design flexibility appropriate with sequence of operations required in each project area or typical space type.

6. Networked luminaires and intelligent lighting control devices shall support individual (unique) configuration of device settings and properties.
7. Networked luminaires and intelligent lighting control devices shall have distributed intelligence programming stored in non-volatile memory such that following any loss of power the lighting control zones shall operate according to their defined default settings and sequence of operations.
8. Lighting control zones shall be capable of being networked with a higher level system backbone to provide time based control, remote control from inputs and/or systems external to the control zone, and remote configuration and monitoring through a software interface.
9. The system may include one or more system controllers that provide time-based control and global system control across multiple control zones and backbone network segments. The system controller also provides a means of connecting the lighting control system to a system software interface and building management systems via BACnet/IP protocol.
10. The system may include "communication bridge" devices that route communication from lighting control zones (wired or wireless) to and from the system controller, for purposes of decreasing system wiring requirements.
11. All system devices shall support remote firmware update, such that physical access to each device is not necessary, for purposes of upgrading functionality at a later date.

B. Wired Networked Control Zone Characteristics
1. Connections to devices within a wired networked lighting control zone and to backbone components shall be with a single type of low voltage network cable, which shall be compliant with CAT5e specifications or higher. To prevent wiring errors and provide cost savings, the use of mixed types of low voltage network cables shall not be permitted.
2. Devices in an area shall be connected via a "daisy-chain" topology; requiring all individual networked devices to be connected back to a central component in a "hub-and-spoke" topology shall not be permitted, so as to reduce the total amount of network cable required for each control zone.
3. System shall provide the option of having pre-terminated plenum rated low voltage network cabling supplied with hardware so as to reduce the opportunity for improper wiring and communication errors during system installation.
4. Following proper installation and provision of power, all networked devices connected together with low voltage network cable shall automatically form a functional lighting control zone without requiring any type of programming, regardless of the programming mechanism (e.g., software application, handheld remote, pushbutton). The "out of box" default sequence of operation is intended to provide typical sequence of operation so as to minimize the system start-up and programming requirements and to also have functional lighting control operation prior to system start-up and programming.
5. Once software is installed, system shall be able to automatically discover all connected devices without requiring any provisioning of system or zone addresses.
6. All networked devices shall have the ability to detect improper communication wiring and blink its LED in a specific cadence as to alert installation/start-up personnel.
7. Networked control devices intended for control of egress and/or emergency light sources shall not require the use of additional, externally mounted UL924 shunting and/or 0-10V disconnect devices, so as to provide a compliant sequence of operation while reducing the overall installation and wiring costs of the system. The following types of wired networked control devices shall be provided for egress and/or emergency light fixtures:
   a. Low-Voltage power sensing: These devices shall automatically provide 100% light level upon detection of loss of power sensed via the low voltage network cable connection.

b. UL924 Listed Line-Voltage power sensing: These devices shall be listed as emergency relays under the UL924 standard and shall automatically close the load control relay(s) and provide 100% light output upon detection of loss of power sensed via line voltage connections.

C. Wireless Mesh Networked Control Zone Characteristics
1. No wired control connections between wireless networked devices shall be required.
2. Wireless networked devices shall communicate via radio frequency of 2.4 GHz using a standards-based wireless mesh networking protocol.
3. Wireless network shall be self-healing, such that optimum routing paths between devices are automatically established or restored if any nodes are respectively added to or removed from the wireless network.
4. Wireless network communication shall support uniform and instant response such that all luminaires in a lighting control zone respond immediately and synchronously in response to a sensor or wallstation signal.
5. To support the system architecture requirement for distributed intelligence, wireless network communication shall support communication of control signals from sensors and wallstations to networked luminaires and wireless load control devices, without requiring any communication, interpretation, or translation of information through a backbone device such as a wireless access point, communication bridge or gateway.
6. All wireless communication shall be encrypted using the 128-bit Advanced Encryption Standard (AES).
7. Wet listed wireless networked luminaires and wireless sensing devices shall be offered, so as to support a wide variety of lighting control applications.
8. {USC}Accounting for typical environmental conditions and building construction materials encountered within parking garage environments or within high-bay applications in industrial, warehouse, gymnasium environments, wireless mesh networked devices shall be capable of communicating to at least 30 ft spacing between luminaires with embedded wireless transceivers, and shall be capable of communicating to at least 60 ft spacing between wireless networked devices installed external to luminaire housings or other enclosures. .{USC}
   a. {USC}Wireless networked devices shall have a line-of-sight communication range of at least 1000 ft under ideal environmental conditions. {USC}
9. Networked control devices intended for control of egress and/or emergency light sources shall not require the use of additional, externally mounted UL924 shunting and/or 0-10V disconnect devices, so as to provide a compliant sequence of operation while reducing the overall installation and wiring costs of the system. The following types of wired networked control devices shall be provided for egress and/or emergency light fixtures:
   a. UL924 Listed Line-Voltage power sensing: These devices shall be listed as emergency relays under the UL924 standard and shall automatically close the load control relay(s) and provide 100% light output upon detection of loss or interruption of power sensed via line voltage connections.

D. Wireless Dual Band Networked Control Zone Characteristics
1. No wired connections between wireless networked devices shall be required.
2. Wireless networked devices shall communicate using two radio frequencies, 900 MHz and 2.4 GHz.
3. Multiple wireless networking protocols shall be supported:
   a. A standard based, distributed star topology type of protocol for 900 MHz communication, so as to support indoor and outdoor lighting control applications.

b. A Bluetooth standard protocol for 2.4 GHz communication that supports direct connection to a smartphone and tablet device, so as to support device configuration and control applications without requiring the use of a system backbone.

4. Wireless network shall be self-healing, such that optimum communication between devices is automatically established or restored if any nodes are respectively added to or removed from the wireless network.
5. Wireless network communication shall support uniform and instant response such that all luminaires in a lighting control zone respond immediately and synchronously in response to a sensor or wallstation signal.
6. To support the system architecture requirement for distributed intelligence, wireless network communication shall support communication of control signals from sensors and wallstations to networked luminaires and wireless load control devices, without requiring any communication, interpretation, or translation of information through a backbone device such as a wireless access point, communication bridge or gateway.
7. All wireless communication shall support the following five tiers of security measures, so as to safely support Internet-connected applications.
   a. Application Data Encryption
   b. Mutual Entity Authentication
   c. Message Authentication
   d. Mutual Entity Authentication
   e. Application Data Encryption
8. Accounting for typical environmental conditions and building construction materials encountered within commercial indoor lighting environments, wireless mesh networked devices shall be capable of communicating to at least 300’ spacing between luminaires with embedded wireless transceivers.
9. {USC}Wireless networked devices shall have a line-of-sight communication range of at least 1000 ft. under ideal environmental conditions. {USC}

E. System Integration Capabilities
1. The system shall interface with third party building management systems (BMS) to support two-way communication using the industry standard BACnet/IP or BACnet/MSTP protocols. The following system integration capabilities shall be available via BACnet/IP and BACnet/MSTP protocols:
   a. The system shall support control of individual devices, including, but not limited to, control of relay and dimming output. All system devices shall be available for control.
   b. The system shall support reading of individual device status information, including but not limited to, relay state, dimming output, power measurement, occupancy sensor status, and photocell sensor states or readings. All system devices shall be available for polling for devices status.
   c. The system shall support activation of pre-defined system Global Profiles (see Supported Sequence of Operations for further definition of Global Profile capabilities).
   d. The system shall support activation of Profiles (local or global) and Preset Scenes from third party systems by receiving dry contact closure output signals or digital commands via RS-232/RS-485.
   e. The system shall support activation of system profiles from Demand Response Automation Servers via the OpenADR 2.0a protocol.

F. Supported Sequence of Operations

1. The following characteristics and performance requirements shall apply to wired and wireless control zones provided by the system.
2. Control Zones
   a. Networked luminaires and intelligent lighting control devices installed in an area (also referred to as a group of devices) shall be capable of transmitting and tracking occupancy sensor, photocell sensor, and manual switch information within at least 48 unique control zones to support different and reconfigurable sequences of operation within the area. These shall also be referred to as local control zones.
   b. Networked luminaires and intelligent lighting control devices located in different areas shall be able to transmit and track occupancy, photocell, and switch information within at least 128 system-wide control zones to support required sequences of operation that may span across multiple areas. These shall also be referred to as global control zones.
3. Wallstation Capabilities
   a. Wallstations shall be provided to support the following capabilities:
      1) On/Off of a local control zone and global control zone simultaneously, as required.
      2) Continuous dimming control of light level of a local control zone and global control zone simultaneously, as required.
      3) Preset Scenes that can activate a specific combination of light levels across multiple local and global channels, as required.
      4) Profile Scenes that can modify the sequence of operation for the devices in the area (group) in response to a button press. This capability is defined as supporting “Local Profiles” and is used to dynamically optimize the occupant experience and lighting energy usage. Parameters that shall be configurable and assigned to a Local Profile include light level, response to occupancy sensors (including enabling/disabling response), response to daylight sensors (including enabling/disabling response) and enabling/disabling of wallstations.
   b. Dimming control to allow color tuning between 3000 and 5000K (Kelvin)
      1) 3-way / multi-way control: multiple wallstations shall be capable of controlling the same local and global control zones, so as to support “multi-way” switching, dimming, preset scene, and profile scene control.
4. Occupancy Sensing Capabilities
   a. Local and global control: Occupancy sensors shall be configurable to control a local and global zone simultaneously, as required.
   b. Multi-sensor control: multiple occupancy sensors shall be capable of controlling the same local and global control zones. This capability combines occupancy sensing coverage from multiple sensors without consuming multiple control zone addresses.
   c. System shall support the following types of occupancy sensing sequence of operations:
      1) On/Off Occupancy Sensing
      2) Partial-On Occupancy Sensing
      3) Partial-Off Occupancy Sensing
      4) Vacancy Sensing (Manual-On / Automatic-Off)
   d. On/Off, Partial-On, and Partial-Off Occupancy Sensing modes shall function according to the following sequence of operation:
      1) Occupancy sensors automatically turn lights on to a designated level when occupancy is detected. To support fine tuning of Partial-On sequences the designated occupied light level shall support at least 100 dimming levels.

2) Occupancy sensors automatically turn lights off or to a dimmed state(Partial-Off) when vacancy occurs or if sufficient daylight is detected. To support fine tuning of Partial-Off sequences the designated unoccupied dim level shall support at least 100 dimming levels.
3) To provide additional energy savings the system shall also be capable of combining Partial-Off and Full-Off operation by dimming the lights to a designated level when vacant and then turning the lights off completely after an additional amount of time.
4) Photocell readings, if enabled in the Occupancy Sensing control zone, shall be capable of automatically adjusting the light level during occupied or unoccupied conditions as necessary to further reduce energy usage. Additional requirements and details for photocell sensing capabilities are indicated under Photocell Sensing Capabilities.
5) The use of a wallstation shall change the dimming level or turn lights off as selected by the occupant. The lights shall remain in this manually-specified light level until the zone becomes vacant; upon vacancy the normal sequence of operation, as defined above, shall proceed.

e. Vacancy Sensing mode (also referred to as Manual-On / Automatic-Off) shall function according to the following sequence of operation:
1) The use of a wallstation is required turn lights on. The system shall be capable of programming the zone to turn on to either to a designated light level or the previous light level. Initially occupying the space without using a wallstation shall not result in any change in light level.
2) Occupancy sensors shall automatically turn lights off when vacancy occurs is detected. To provide an enhanced occupant experience the system shall also be capable of dimming the lights when vacant and then turning the lights off completely after an additional amount of time.
3) To minimize occupant impact in case the area or zone is still physically occupied following dimming or shutoff of the lights due to detection of vacancy, the system shall support an “automatic grace period” immediately following detection of vacancy, during which time any detected occupancy shall result in the lights reverting to the previous level. After the grace period has expired, the use of a wallstation is required to turn lights on.
4) Photocell readings, if enabled in the Occupancy Sensing control zone, shall be capable of automatically adjusting the light level as necessary to further reduce energy usage. Additional requirements and details for photocell sensing capabilities are indicated under Photocell Sensing Capabilities.
5) At any time, the use of a wallstation shall change the dimming level or turn lights off as selected by the occupant. The lights shall remain in this manually-specified light level until the zone becomes vacant; upon vacancy the normal sequence of operation, as defined above, shall proceed.

f. To accommodate different types of environments, vacancy time delays before dimming or shutting off lights shall be specifiable for control zones between 15 seconds to 2 hours.

5. Photocell Sensing Capabilities (Automatic Daylight Sensing)
a. Photocell sensing devices shall be configurable to control a local and global zone simultaneously, as required.
b. The system shall support the following types of photocell-based control:
1) On/Off: The control zone is automatically turned off if the photocell reading exceeds the defined setpoint and automatically turned on if the photocell

reading is below the defined setpoint. A time delay or adaptive setpoint adjustable behavior may be used to prevent the system from exhibiting nuisance on/off switching.

2) Continuous Dimming: The control zone automatically adjusts its dimming output in response to photocell readings, such that a minimum light level consisting of both electric light and daylight sources is maintained at the task. The photocell response shall be configurable to adjust the photocell setpoint and dimming rates.

6. Schedule and Global Profile Capabilities

a. The system shall be capable of automatically modifying the sequence of operation for selected devices in response to any of the following: a time-of-day schedule, contact closure input state, RS-232/RS-485 command, BACnet input command, and demand response signal. This capability is defined as supporting "Global Profiles" and is used to dynamically optimize the occupant experience and lighting energy usage.

b. Scheduling. Global profiles may be scheduled with the following capabilities:

1) Global Profiles shall be stored within and executed from the system controller (via internal timeclock) such that a dedicated software host or server is not required to be online to support automatic scheduling and/or operation of Global Profiles.

2) Global Profile time of day schedules shall be capable of being given the following recurrence settings: daily, specific days of week, every "n" number of days, weekly, monthly, and yearly. Lighting control profile schedules shall support definition of start date, end date, end after "n" recurrences, or never ending. Daylight savings time adjustments shall be capable of being performed automatically, if desired.

3) Global Profiles shall be capable of being scheduled to run according to timed offsets relative to sunrise or sunset. Sunrise/sunset times shall be automatically derived from location information using an astronomical clock.

4) Blink warning and timed extension capabilities. At the end of a scheduled period, the system shall be capable of providing a visible "blink warning" 5 minutes prior to the end of the schedule. Wallstations may be programmed to provide timed overrides that turn the lights on for an additional period of time. Timed override duration shall be programmable for each individual device, zone of devices, or customized group of devices, ranging from 5 minutes to 12 hours.

5) Software management interface shall be capable of displaying a graphic calendar view of profile schedules for each control zone.

c. System Global Profiles shall have the following additional capabilities:

1) Global Profiles shall be capable of being manually activated directly from the system controller, specially programmed input devices, and software management interface.

2) Global Profiles shall be selectable to apply to a single device, zone of devices, or customized group of devices.

3) Parameters that shall be configurable and assigned to a Global Profile include light level, response to occupancy sensors (including enabling/disabling response), response to daylight sensors (including enabling/disabling response) and enabling/disabling of wallstations.

d. A backup of Local and Global Profiles shall be stored on the software's host server such that the Profile backup can be applied to a replacement system controller or wallstation.

7. Automated demand response capabilities. Profiles created for automated demand response events shall support automatic reduction of light level to programmable values. At least four levels of demand response profiles shall be supported by the system.

2.4 SYSTEM SOFTWARE INTERFACES

A. Management Interface

1. System shall provide a web-based management interface that provides remote system control, live status monitoring, and configuration capabilities of lighting control settings and schedules.
2. Management interface must be compatible with industry-standard web browser clients, including, but not limited to, Microsoft Internet Explorer®, Apple Safari®, Google Chrome®, Mozilla Firefox®.
3. Management interface shall require all users to login with a User Name and Password and shall support creation of at least 100 unique user accounts.
4. Management interface shall support at least three permission levels for users: read-only, read & change settings, and full administrative system access.
5. Management interface shall be capable of restricting read-only and read & change access for user accounts to specific devices within the system.
6. All system devices shall be capable of being given user-defined names.
7. The following device identification information shall be displayed in the Management interface: model number, model description, serial number, manufacturing date code custom label(s), and parent network device.
8. Management interface shall be able to read the live status of a networked luminaire or intelligent control device and shall be capable of displaying luminaire on/off status, dim level, power measurement, device temperature, PIR occupancy sensor status, microphonic occupancy sensor status, remaining occupancy time delay, photocell reading, and active Scenes or Profiles.
9. Management interface shall be able to read the current active settings of a networked luminaire or intelligent control device and shall be capable of displaying dimming trim levels, occupancy sensor and photocell enable/disable, occupancy sensor time delay and light level settings, occupancy sensor response (normal or vacancy), and photocell setpoints and transition time delays.
10. Management interface shall be able to change the current active settings and also default settings for an individual networked luminaire or intelligent control device.
11. Management interface shall be capable of applying settings changes for a zone of devices or a group of selected devices using a single "save" action that does not require the user to save settings changes for each individual device.
12. A printable network inventory report shall be available via the management interface.
13. A printable report detailing all system profiles shall be available via the management interface.
14. All sensitive information stored by the software shall be encrypted.
15. All system software updates must be available for automatic download and installation via the Internet.

B. Historical Database and Analytics Interface

1. System shall provide a historical database that stores device operational history and calculates energy usage for all networked luminaires and intelligent control devices.
2. System shall be capable of reporting lighting system events and performance data back to the historical database for display and analysis.
3. Historical database shall be capable of recording historical data for up to 20,000 networked devices for a period of at least 1 calendar year.
4. An "Energy Scorecard" shall be displayed that shows calculated energy savings in dollars, kWh, or CO2.
5. Software shall calculate the allocation of energy savings to different control measures (occupancy sensors, photocells, manual switching, etc.).
6. Energy savings data shall be calculated for the system as a whole or for individual zones.
7. A time scaled graph showing all relay transitions shall be presented.
8. A time scaled graph showing a zones occupancy time delay shall be presented
9. A time scaled graph showing the total light level shall be presented.
10. User shall be able to customize the baseline run-time hours for a space.
11. User shall be able to customize up to four time-of-day billing rates and schedules.
12. Historical data shall be exportable from the Historical Database via a "CSV" type of file format.

C. Visualization Interfaces
1. System shall provide a web-based visualization interface that displays graphical floorplan.
2. Graphical floorplan shall offer the following types of system visualization:
   a. Full Device Option - A master graphic of the entire building, by floor, showing each control device installed in the project with zones outlined to include but not be limited to the following:
      1) Controls embedded light fixtures
      2) Controls devices not embedded in light fixtures
      3) Daylight Sensors
      4) Occupancy Sensors
      5) Wall Switches and Dimmers
      6) Scene Controllers
      7) Networked Relays
      8) Bridges
      9) System Controllers
      10) Panels
      11) Zone outlines
   b. Zone Only Option - A master graphic of the entire building, by floor, showing control zones:
      1) Zones outlined
   c. Allow for pan and zoom commands so smaller areas can be displayed on a larger scale simply by panning and zooming each floor's master graphic.
   d. A mouse click on any control device shall display the following information (as applicable):
      1) The device catalog number.
      2) The device name and custom label.
      3) Device diagnostic information.
      4) Information about the device status or current configuration is available with an additional mouse click.

D. Personal Control Applications

1. Software interface shall support personal control software applications that provide user-specific control of individual luminaires, control zones, and scene presets.
2. Personal control applications shall support control of dimming output or definition of dimming presets for luminaires and devices that are dimmable.
3. The system administrator shall be capable of defining personal control permissions for each user account.
4. Software interface shall provide a Microsoft Windows® operating system taskbar application for personal lighting control.
5. Software interface shall provide an Apple iOS® operating system application (supported by mobile phones and mobile tablet devices) for personal lighting control.

E. Smartphone Programming Interface for Wired Devices
1. Application interface shall be provided for both Apple iOS® and Android operating systems that allows configuration of lighting control settings.
2. The application shall support the configuration of wired networked control devices via a Bluetooth® Low Energy (BLE) Programming Device.
   a. Application shall support a security pin-code to access the zone of lighting control devices.
   b. The application shall provide indication of signal strength where multiple Bluetooth Low Energy Programming Devices are available for configuration.
   c. The application shall indicate the number of wired networked control devices.
3. Programming capabilities through the application shall include, but not be limited to, the following:
   a. Switch/occupancy/photosensor group configuration
   b. Manual/automatic on modes
   c. Turn-on dim level
   d. Occupancy sensor time delays
   e. Dual technology occupancy sensors sensitivity
   f. Trim level settings

2.5 SYSTEM BACKBONE AND SYSTEM INTEGRATION EQUIPMENT

A. IP nLight ECLYPSE™ System Controller (IP-NE-CTRL)
1. System Controller shall be multi-tasking, real-time digital control processor consisting of modular hardware with plug-in enclosed processors, communication controllers, and power supplies.
2. System Controller shall have 32-bit microprocessor operating at a minimum of 1 GHz.
3. System Controller shall have minimum of 512MB memory, with a minimum of 4GB non-volatile flash, to support its own operating system and databases.
4. System Controller shall perform the following functions:
   a. Facilitation of global network communication between different areas and control zones.
   b. Time-based control of downstream wired and wireless network devices.
   c. Linking into an Ethernet network.
   d. Integration with Building Management Systems (BMS) and Heating, Ventilation and Air Conditioning (HVAC) equipment.
   e. Connection to various software interfaces, including management interface, historical database and analytics interface, visualization interface, and personal control applications.

5. System Controller shall have an integral web server to support configuration, diagnostics and hosting of software interfaces.
6. Device shall have option for a graphical touch screen to support configuration and diagnostics.
7. Device shall have three RJ-45 networked lighting control ports for connection to any of the following:
    a. The graphical touch screen
    b. Wired communication bridges
    c. Direct connection to networked wired luminaires and intelligent lighting control devices (up to 128 total devices per port)
8. Device shall be capable of communicating with wireless mesh network bridges and software interfaces via LAN connection.
9. Device shall automatically detect all networked devices connected to it, including those connected to wired and wireless communication bridges.
10. Device shall have a standard internal time clock.
11. Device shall have 2 switched RJ-45 10/100 BaseT Ethernet ports for local area network (LAN) connection
    a. Ethernet connection shall support daisy chain wiring to other lighting control system LAN devices, such as other system controllers and wireless mesh networked communication bridges.
    b. Ethernet connection shall support IPv4 and shall be capable of using a dedicated static or DHCP assigned IP address.
12. Device shall have 2 x USB 2.0 Expansion ports for
    a. 802.11 Wi-Fi Adapter enabling wireless connectivity including:
        1) Hot Spot
        2) Access Point
        3) Client
        4) Spanning Tree Protocol
13. Each System Controller shall be capable of managing and operating at least 1500 networked devices (wired or wireless).
    a. Multiple System Controllers may be networked together via LAN connection to scale the system up to 20,000 networked devices.
14. System Controller shall support BACnet/IP and BACnet/MSTP protocols to directly interface with BMS and HVAC equipment without the need for additional protocol translation gateways.
    a. BACnet/MSTP shall support up to minimum of 50 additional BACnet MS/TP controllers in addition to the Expansion I/O modules.
    b. BACnet/MSTP shall support 9600 to 115200 baud.
    c. System Controller shall be BACnet Testing Laboratory (BTL listed) using Device Profile BACnet Building Controller (B-BC) with outlined enhanced features.
    d. Shall contain a “FIPS 140-2 Level 1 Compliant” cryptographic module.

B. OpenADR Interface
1. System shall provide an interface to OpenADR protocol Demand Response Automation Servers (DRAS) typically provided by local electrical utility.
2. OpenADR interface shall meet all of the requirements of Open ADR 2.0a Virtual End Nodes(VEN), including:
    a. Programmable with the account information of the end-user’s electrical utility DRAS account credentials.

3. OpenADR interface shall support the activation of system profiles configured for each of the automated demand response levels defined in the utility demand response program.

2.6 WIRED NETWORKED DEVICES

A. Wired Networked Wall Switches, Dimmers, Scene Controllers
   1. Devices shall recess into single-gang switch box and fit a standard GFI opening.
   2. Communication and low voltage power shall be delivered to each device via standard low voltage network cabling with RJ-45 connectors.
   3. All switches shall have the ability to detect when it is not receiving valid communication and blink its LED in a pattern to visually indicate a potential wiring issue.
   4. Devices with mechanical push-buttons shall provide tactile and LED user feedback.
   5. Devices with mechanical push-buttons shall be made available with custom button labeling.
   6. Wall switches & dimmers shall support the following device options:
      a. Number of control zones: 1, 2 or 4
      b. Control Types Supported: On/Off or On/Off/Dimming
      c. Colors: Ivory, White, Light Almond, Gray, Black, Red
   7. Scene controllers shall support the following device options:
      a. Number of scenes: 1, 2 or 4
      b. Control Types Supported:
         1) On/Off
         2) On/Off/Dimming
         3) Preset Level Scene Type
         4) Reprogramming of other devices within daisy-chained zone so as to implement user selected lighting scene
         5) Selecting a lighting profile to be run by the system's upstream controller so as to implement a selected lighting profile across multiple zones
         6) Colors: Ivory, White, Light Almond, Gray, Black, Red
         7) Color tuning dimming to allow between 3000 and 5000K (Kelvin)

B. Wired Networked Graphic Wallstations
   1. Device shall surface mount to single-gang switch box.
   2. Device shall have a 3.5" full color touch screen.
   3. Device shall be powered with Class 2 low voltage supplied locally via a directly wired power supply.
   4. Device shall have a micro-USB style connector for local computer connectivity.
   5. Communication shall be over standard low voltage network cabling with RJ-45 connectors.
   6. Device shall enable user supplied screen saver image to be uploaded within one of the following formats: jpg, png, gif, bmp, tif.
   7. Device shall enable configuration of all switches, dimmers, and lighting preset scenes via password protected setup screens.
   8. Graphic wallstations shall support the following device options:
      a. Number of control zones: Up to 16
      b. Number of scenes: Up to 16
      c. Colors: Ivory, White, Light Almond, Gray, Black

C. Wired Networked Auxiliary Input / Output (I/O) Devices

1. Devices shall be plenum rated and be inline wired, screw mountable, or have an extended chase nipple for mounting to a ½ in knockout.
2. Communication and low voltage power shall be delivered to each device via standard low voltage network cabling with RJ-45 connectors.
3. Auxiliary Input/Output Devices shall be specified as an input or output device with the following options:
   a. Contact closure input
      1) Input shall be programmable to support maintained or momentary inputs that can activate local or global scenes and profiles, ramp light level up or down, or toggle lights on/off.
   b. 0-10V analog input
      1) Input shall be programmable to function as a daylight sensor.
   c. RS-232/RS-485 digital input
      1) Input supports activation of local or global scenes and profiles, and on/off/dimming control of up to 16 local control zones.
   d. 0-10V dimming control output, capable of sinking up to 20mA of current
      1) Output shall be programmable to support all standard sequence of operations supported by system.

D. Wired Networked Occupancy and Photosensors
1. Occupancy sensors shall sense the presence of human activity within the desired space and fully control the on/off function of the lights.
2. Sensors shall utilize passive infrared (PIR) technology, which detects occupant motion, to initially turn lights on from an off state, thus preventing false on conditions. Ultrasonic or Microwave based sensing technologies shall not be accepted.
3. For applications where a second method of sensing is necessary to adequately detect maintained occupancy (such as in rooms with obstructions), a sensor with an additional "dual" technology shall be used.
4. Dual technology sensors shall have one of its two technologies not require motion to detect occupancy. Acceptable dual technology includes PIR / Microphonics (also known as Passive Dual Technology or PDT) which both looks for occupant motion and listens for sounds indicating occupants. Sensors where both technologies detect motion (PIR / Ultrasonic) shall not be acceptable.
5. All sensing technologies shall be acoustically passive, meaning they do not transmit sound waves of any frequency (for example in the Ultrasonic range), as these technologies have the potential for interference with other electronic devices within the space (such as electronic white board readers). Acceptable detection technologies include Passive Infrared(PIR), and/or Microphonics technology. Ultrasonic or Microwave based sensing technologies shall not be accepted.
6. Communication and low voltage power shall be delivered to each device via standard low voltage network cabling with RJ-45 connectors.
7. All sensors shall have the ability to detect when it is not receiving valid communication and blink its LED in a pattern to visually indicate a potential wiring issue.
8. Sensor programming parameter shall be available and configurable remotely from the software and locally via the device push-button.
9. Network system shall have ceiling, fixture, recessed & corner mounted sensors available, with multiple lens options available customized for specific applications.
10. Sensors shall be available with zero or one integrated dry contact switching relays, capable of switching 1 amp at 24 VAC/VDC (resistive only).

11. Sensors shall be available with one or two occupancy "poles", each of which provides a programmable time delay.
12. Sensors shall have optional features for photosensor/daylight override, dimming control, and low temperature/high humidity operation.
13. Photosensor shall provide for an on/off set-point, and a deadband to prevent the artificial light from cycling. Delay shall be incorporated into the photocell to prevent rapid response to passing clouds.
14. Photosensor and dimming sensor's set-point and deadband shall be automatically calibrated through the sensor's microprocessor by initiating an "Automatic Set-point Programming" procedure. Min and max dim settings as well as set-point may be manually entered.
15. Deadband setting shall be verified and modified by the sensor automatically every time the lights cycle to accommodate physical changes in the space (i.e., furniture layouts, lamp depreciation, or lamp outages).
16. A dual zone option shall be available for On/Off Photocell, Automatic Dimming Control Photocell, or Combination units. The secondary daylight zone shall be capable of being controlled as an "offset" from the primary zone.

E. Wired Networked Wall Switch Sensors
1. Devices shall recess into single-gang switch box and fit a standard GFI opening.
2. Communication and low voltage power shall be delivered to each device via standard low voltage network cabling with RJ-45 connectors.
3. All wall switch sensors shall have the ability to detect when it is not receiving valid communication and blink its LED in a pattern to visually indicate a potential wiring issue.
4. Devices with mechanical push-buttons shall provide tactile user feedback.
5. Wall switches sensors shall support the following device options:
   a. User Input Control Types Supported: On/Off or On/Off/Dimming
   b. Occupancy Sensing Technology: PIR only or Dual Tech acoustic
   c. Daylight Sensing Option: Inhibit Photosensor
   d. Colors: Ivory, White, Light Almond, Gray

F. Wired Networked Embedded Sensors
1. Network system shall have embedded sensors consisting of occupancy sensors and/or dimming photocells that can be embedded into luminaire such that only the lens shows on luminaire face.
2. {USC}Occupancy sensor detection pattern shall be suitable for 7.5 ft. to 20 ft. mounting heights.{USC}
3. Embedded sensors shall support the following device options:
   a. Occupancy Sensing technology: PIR only or Dual Tech acoustic
   b. Daylight Sensing Option: Occupancy only, Daylight only, or combination Occupancy/Daylight sensor

G. Wired Networked Power Packs and Secondary Packs
1. Power Packs shall incorporate one optional Class 1 relay, optional 0-10 VDC dimming output, and contribute low voltage Class 2 power to the rest of the system.
2. Power Packs shall accept 120 or 277 VAC (or optionally 347 VAC) and carry a plenum rating.
3. Secondary Packs shall incorporate the relay and 0-10 VDC or line voltage dimming output but shall not be required to contribute system power.

4. Power Supplies shall provide system power only but are not required to switch line voltage circuit.
5. Auxiliary Relay Packs shall switch low voltage circuits only, capable of switching 1 amp at 40 VAC/VDC (resistive only).
6. Communication shall be delivered to each device via standard low voltage network cabling with RJ-45 connectors. Secondary packs shall receive low voltage power via standard low voltage network cable.
7. Power Pack programming parameter shall be available and configurable remotely from the software and locally via the device push-button.
8. Power Pack shall securely mount to junction location through a threaded ½ in chase nipple or be capable of being secured within a luminaire ballast/driver channel. Plastic clips into junction box shall not be accepted. All Class 1 wiring shall pass through chase nipple into adjacent junction box without any exposure of wire leads. Note: UL Listing under Energy Management or Industrial Control Equipment automatically meets this requirement, whereas Appliance Control Listing does not meet this safety requirement.
9. When required by local code, Power Pack must install inside standard electrical enclosure and provide UL recognized support to junction box. All Class 1 wiring is to pass through chase nipple into adjacent junction box without any exposure of wire leads.
10. Power/Secondary Packs shall be available with the following options:
11. Power Pack capable of full 16-Amp switching of all normal power lighting load types, with optional 0-10V dimming output capable of up to 100mA of sink current.
12. Secondary Pack with UL924 listing for switching of full 16-Amp Emergency Power circuits, with optional 0-10V dimming output capable of up to 100mA of sink current.
13. Power and Secondary Packs capable of full 20-Amp switching of general purpose receptacle (plug-load) control.
14. Secondary Pack capable of full 16-Amp switching of all normal power lighting load types.
15. Secondary Pack capable of 5-Amps switching and dimming 120 VAC incandescent lighting loads or 120/277 VAC line voltage dimmable fluorescent ballasts (2-wire and3-wire versions).
16. Secondary Pack capable of 5-Amps switching and dimming of 120/277 VAC magnetic low voltage transformers.
17. Secondary Pack capable of 4-Amps switching and dimming of 120 VAC electronic low voltage transformers.
18. Secondary Pack capable of louver/damper motor control for skylights.
19. Secondary Pack capable of providing a pulse on/pulse off signal for purposes of controlling shade systems via relay inputs.
20. Secondary Pack capable of switching 1 amp at 40 VAC/VDC (resistive only) with the intent to provide relay signal to auxiliary system (e.g. BMS).
21. Power Supply capable of providing auxiliary bus power (no switched or dimmed load).

H. Wired Networked Relay and Dimming Panel
1. Relay and dimming panel shall be available with 4, 8, 12 or 16 individual Field Configurable Relays (FCR) per panel, with an equal number of individual 0-10V dimming outputs.
2. Standard relays used shall have the following required properties:
   a. Configurable in the field to operate with single-, double-, or triple-pole relay groupings.
   b. Configurable in the field to operate with normally closed or normally open behavior.
   c. Provides visual status of current state and manual override control of each relay.
   d. Listed for the following minimum ratings:

1) 40A@120-480VAC Ballast
2) 16A@120-277VAC Electronic
3) 20A@120-277VAC Tungsten
4) 20A@48VDC Resistive
5) 2HP @ 120VAC,
6) 3HP @ 240-277VAC
7) 65kA SCCR @ 480VAC

3. 0-10 dimming outputs shall support a minimum of 100mA sink current per output.
4. Relay and dimming outputs shall be individually programmable to support all standard sequence of operations as defined in this specification.
5. Panel shall be UL924 listed for control of emergency lighting circuits.
6. Panel shall power itself from an integrated 120-277VAC or 347VAC supply.
7. Panel shall provide a configurable low-voltage sensor input with the following properties:
8. Configurable to support any of the following input types:
   a. Indoor Photocell
   b. Outdoor Photocell
   c. Occupancy Sensor
   d. Contact Closure
      1) Low voltage sensor input shall provide +24VDC power for the sensor so that additional auxiliary power supplies are not required.
      2) Sensor input supports all standard sequence of operations as defined in this specification.
9. Panel shall provide a contact closure input that acts as a panel override to activate the normally configured state of all relays (i.e., normally open or normally closed) in the panel. This input is intended to provide an interface to alarm systems, fire panels, or BMS system to override the panel.
10. Panel shall supply current limited low voltage power to other networked devices connected via low voltage network cable.
11. Panel shall be available with NEMA 1 rated enclosure with the following properties:
    a. Surface-mounted or flush-mounted enclosure back box
    b. Screw-fastened cover or hinged cover with keyed lock
12. {USC}Panel shall be rated from 32-122 °F.{USC}

I. Wired Networked Bluetooth® Low Energy Programming Device
1. Device shall be plenum rated and be inline wired, screw mountable.
2. Communication and low voltage power shall be delivered to device via standard low voltage network cabling with RJ-45 connectors.
3. Bluetooth Low Energy connection shall allow connection from smartphone application for programming device settings within the local daisy-chain zone (see list of available settings in section, 2.4-System Software Interfaces, Sub-section .5).
   a. Device shall provide visual indication of remote Bluetooth connection via LED integrated into device enclosure such that it is visible from all angles while the zone is being programmed.

J. Wired Networked Communication Bridge
1. Device shall surface mount to a standard 4” x 4” square junction box.
2. Device shall have 8 RJ-45 ports for connection to lighting control zones (up to 128 devices per port), additional network bridges, and System Controller.

3. Device shall be capable of aggregating communication from multiple lighting control zones for purposes of minimizing backbone wiring requirements back to System Controller.
4. Device shall be powered with Class 2 low voltage supplied locally via a directly wired power supply or powered via low voltage network connections from powered lighting control devices (e.g. power packs).
5. Wired Bridge shall be capable of redistributing power from its local supply and connected lighting control zones with excess power to lighting control zones with insufficient local power. This architecture also enables loss of power to a particular area to be less impactful on network lighting control system.

2.7 WIRELESS MESH NETWORKED DEVICES

A. Wireless Mesh Networked Sensor Interface
1. The wireless sensor interface shall integrate industry standard low voltage switching devices and contact closure outputs into the control network.
2. The device interface shall have a universal power supply that operates at 120, 208, 240 or 277 VAC.
3. The device shall be listed under the UL 916 standard to allow field installation.
4. The device interface shall be suitable for mounting onto an electrical junction box and have UL 2043 listing for mounting in a plenum.
5. The device interface shall provide 2 low voltage sensing input channels suitable for connecting to momentary contact wall switches and dry contact outputs from other systems.
6. The device shall provide at least 100 mA of output power at 24VDC for connection to external input devices.
7. The device shall be capable of broadcasting the following manual wall control commands: on, off, and adjust dim level.

B. Wireless Mesh Networked Light Controllers
1. The wireless light controller shall have a line voltage relay and 0-10V dimming output suitable for control of commercial and industrial lighting including fluorescent, HID, induction and LEDs.
2. Device shall have a form factor similar to a slim European-style ballast, which is intended for installation directly inside the ballast channel of a fixture.
3. Device shall have an integrated internal antenna suitable for embedding inside of a commercial and industrial luminaire while maintaining reliable wireless communication for typical luminaire spacing in commercial and industrial applications (see Wireless Mesh Network Control Zone Characteristics). An external antenna attached to the luminaire shall not be allowed.
4. The wireless light controller shall have a universal power supply that operates at 120, 208, 240 or 277VAC.
5. The device shall be listed under the UL 916 standard to allow field installation.
6. Each wireless light controller shall provide measurement capability of the amperage, voltage, wattage, and watt-hours of its controlled lighting.
   a. Amperage and current measurements shall be accurate to +/- 2%.
   b. Wattage measurement shall account for power factor of the load, so that real active power is reported by the system instead of apparent power.

7. The wireless light controller shall have a connector for an optional digital occupancy sensor and photocell.
8. Wireless light controller shall have the following relay options:
   a. Normal power, 5A relay
   b. Emergency power, 5A relay (UL924 listed)
   c. Emergency power, no relay (UL924 listed); still provides 0-10V dimming control and power measurement of the load while providing unswitched and "fail-on" operation of the lighting load.

C. Wireless Mesh Networked Digital Sensor Attachments
1. Digital sensor attachments provide integrated digital occupancy sensing and digital photocell sensor.
2. Devices shall connect directly to the wireless light controller and shall be suitable for embedding into the enclosure of a luminaire.
3. IP-rated digital sensor attachments shall be provided that maintain wet-location capability of a luminaire.
4. Device shall have software-adjustable sensitivity of PIR occupancy sensor.
5. Photocell shall be suitable for closed and open loop applications.
6. Device shall have a user button that may be used to provide diagnostic and factory-default reset capabilities.
7. Digital sensor attachment shall have the following form factors and lens types:
   a. {USC}IP rated, high-mounting height (15-45 ft.), 360° PIR with minimum 15 ft. detection radius, and photocell.{USC}
   b. {USC}IP rated, low-mounting height (up to 15 ft.), extended range 360° PIR with up to 30 ft. detection radius and photocell. {USC}
   c. Micro-sensor form factor, 360° PIR and photocell.

D. Wireless Mesh Networked Sensor-Controllers
1. Sensor-Controllers shall integrate the following functions in to a single enclosure:
   a. Line voltage relay and 0-10V dimming control of a lighting load.
   b. Power measurement of lighting load (voltage, amperage, watts, and watt-hours).
   c. Digital PIR occupancy sensor with software-adjustable sensitivity.
   d. Digital photocell sensor suitable for closed and open loop applications.
   e. User button used to provide diagnostic and factory-default reset capabilities.
2. Sensor-Controllers shall mount to luminaires or junction boxes with a secured chase nipple suitable for ½ in KO mounting holes.
3. Sensor-Controllers shall have optional IP-rated enclosures for wet location applications.
4. Sensor-Controllers shall be the following enclosures, relay options, and lens types:
   a. Enclosure
      1) Damp location, including optional offset bracket to locate the sensor lens to avoid detection cutoff from the luminaire.
      2) Wet location, IP65 rated enclosure or better, including optional back heights and nipple extension lengths to locate the sensor lens to avoid detection cutoff from the luminaire.
   b. Relay Options
      1) Normal power, 5A relay.
      2) Emergency power, 5A relay (UL924 listed).
      3) Emergency power, no relay (UL924 listed); still provides 0-10V dimming control and power measurement of the load while providing unswitched and "fail-on" operation of the lighting load.

c. Lens Types
   1) "No lens," which has no occupancy sensing or photocell sensing capability but allows the Sensor-Controller to be used purely as an externally mounted lighting control device.
   2) IP rated, high-mounting height (15-45 ft.), 360° PIR with minimum 15 ft. detection radius, and photocell.
   3) IP rated, high-mounting height (4.6-13.7 m), 360° PIR with minimum 4.6 m detection radius, and photocell.
   4) IP rated, low-mounting height (up to 15 ft.), extended range 360° PIR with up to 30 ft. detection radius and photocell.
   5) IP rated, low-mounting height (up to 4.6 m), extended range 360° PIR with up to 9.1 m detection radius and photocell.

E. Wireless Mesh Network Communication Bridge
1. A communication bridge device shall be provided that interfaces with the System Controller via LAN connection and interfaces with wireless mesh networked devices via an integrated2.4 GHz transceiver.
2. Device shall provide an option to be powered from a Power-over-Ethernet connection conforming to the IEEE 802.3af standard.
3. Device shall provide an option to be powered from 120VAC electrical outlet.
4. Device shall consume no more than 6 W of power.
5. Device shall be capable of communicating with a group of at least 250 wireless mesh networked devices and luminaires, so as to reduce the amount of communication bridges required in the system.
6. Device shall be supplied with mounting hardware suitable for wall mounting in an office environment or utility closet.
7. Device shall have optional IP-rated enclosure suitable for wet location applications.
8. Device shall have optional heated enclosure suitable for below-freezing applications.
9. To provide security, the wireless bridge shall be unresponsive to wired and wireless communication that do not conform to the specific protocols used by the networked lighting control system.

PART 3 - EXECUTION

3.1 INSTALLATION REQUIREMENTS

A. Installation Procedures and Verification
1. The successful bidder shall review all required installation and pre-startup procedures with the manufacturer's representative through pre-construction meetings.
2. The successful bidder shall install and connect the networked lighting control system components according to the manufacturer's installation instructions, wiring diagrams, the project submittals and plans specifications.
3. The successful bidder shall be responsible for testing of all lighting control low voltage network cable included in the bid. Bidder is responsible for verification of the following minimum parameters:
   a. Wire Map (continuity, pin termination, shorts and open connections, etc.)
   b. Length
   c. Insertion Loss

B. Coordination with Owner's IT Network Infrastructure
   1. The successful bidder is required to coordinate with the owner's representative to secure all required network connections to the owner's IT network infrastructure.
      a. The bidder shall provide to the owner's representative all network infrastructure requirements of the networked lighting control system.
      b. The bidder shall provide to the manufacturer's representative all necessary contacts pertaining to the owner's IT infrastructure, to ensure that the system is properly connected and started up.

C. Documentation and Deliverables
   1. The installing contractor shall be responsible for documenting installed location of all networked devices, including networked luminaires. This includes responsibility to provide as-built plan drawing showing device address barcodes corresponding to locations of installed equipment.
   2. The installing contractor is also responsible for the following additional documentation to the manufacturer's representative if visualization / graphical floorplan software is provided as part of bid package:
      a. As-Built floor plan drawings showing daisy-chain wired network control zones outlined, in addition to device address locations required above. All documentation shall remain legible when reproducing\scanning drawing files for electronic submission.
      b. As-Built electrical lighting drawings (reflected ceiling plan) in PDF and CAD format. Architectural floor plans shall be based on as-built conditions.
         1) CAD files shall have layers already turned on/off as desired to be shown in the graphical floorplan background images. The following CAD elements are recommended to be hidden to produce an ideal background graphical image:
            a) Titleblock
            b) Text- Inclusive of room names and numbers, fixture tags and drawings notes
            c) Fixture wiring and homeruns
            d) Control devices
            e) Hatching or poché of light fixtures or architectural elements
         2) CAD files shall be of AutoCAD 2013 or earlier. Autodesk Revit files overall floor plan views shall be exported to AutoCAD 2013.

3.2 SYSTEM STARTUP

A. Upon completion of installation by the installer, including completion of all required verification and documentation required by the manufacturer, the system shall be started up and programmed by an authorized representative of the manufacturer.
   1. Low voltage network cable testing shall be performed prior to system startup.

B. System start-up and programming shall include:
   1. Verifying operational communication to all system devices.
   2. Programming the network devices into functional control zones to meet the required sequence of operation.
   3. Programming and verifying all sequence of operations.
   4. Customization of owner's software interfaces and applications.

C. Initial start-up and programming is to occur on-site. Additional programming may occur on-site or remotely over the Internet as necessary.

3.3 PROJECT TURNOVER

A. System Documentation and as-builts.
   1. Submit software database file with desired device labels and notes completed.

B. Owner Training
   1. Provisions for onsite training for owner and designated attendees to be included in submittal package. Training shall be a minimum of (1) day and shall be videotaped by the Contractor, and video provided to the Owner.
   2. Contractor shall include in their bid a second training to occur (6) months after occupancy of building by the Owner. The second training shall be a minimum of (4) hours.

END OF SECTION 260943

SECTION 262413 - SWITCHBOARDS

PART 1 - GENERAL

1.1 RELATED DOCUMENTS

A. Drawings and general provisions of the Contract, including General and Supplementary Conditions and Division 01 Specification Sections, apply to this Section.

1.2 SUMMARY

A. Section Includes:
1. Service and distribution switchboards rated 600 V and less and between 800A to 2000A
2. Surge Protective Devices (SPD).
3. Disconnecting and overcurrent protective devices.
4. Instrumentation.
5. Control power.
6. Accessory components and features.
7. Identification.
8. Mimic bus.

B. Switchboard shall be front aligned.

C. Related Sections include the following:
1. Section 260526 “Grounding and Bonding for Electrical Systems”.
2. Section 260536 “Cable Tray for Electrical Systems”.
3. Section 260548 “Vibration and Seismic Controls for Electrical Systems”
4. Section 260553 “Identification for Electrical Systems”.
5. Section 260573 "Overcurrent Protective Device Coordination Study" for short-circuit rating of devices and for setting of overcurrent protective devices.
6. Section 260913 "Electrical Power Monitoring and Control" for communication features of power distribution system devices.
7. Section 263600 "Transfer Switches" for transfer switches that may be located in secondary distribution section.
8. Section 264313 "Surge Protection for Low-Voltage Electrical Power Circuits" for transient voltage surge suppressors for low-voltage power, control, and communication equipment that may be located in secondary section.

1.3 DEFINITIONS

A. NETA ATS: InterNational Electrical Testing Association - Acceptance Testing Specification.

B. EMI: Electromagnetic interference.

C. GFCI: Ground-fault circuit interrupter.

D. RFI: Radio-frequency interference.

E. RMS: Root mean square.

F. SPDT: Single pole, double throw.

G. AIC: Interrupting capacity (RMS symmetrical) in amperes.

1.4 PERFORMANCE REQUIREMENTS

A. Seismic Performance: Switchboards shall withstand the effects of earthquake motions determined according to **SEI/ASCE 7.**
   1. The term "withstand" means "the unit will remain in place without separation of any parts from the device when subjected to the seismic forces specified **and the unit will be fully operational after the seismic event**."
   2. Component Importance Factor: **1.5**.
   3. Component Amplification Factor: **2.5.**
   4. Component Response Modification Factor: **6.0**.

1.5 ACTION SUBMITTALS

A. Product Data: For each type of switchboard, overcurrent protective device, transient voltage suppression device, ground-fault protector, accessory, and component indicated. Include dimensions and manufacturers' technical data on features, performance, electrical characteristics, ratings, accessories, and finishes.

B. Shop Drawings: For each switchboard and related equipment.
   1. Include dimensioned plans, elevations, sections, and details, including required horizontal and vertical clearances and service space around equipment. Show tabulations of installed devices, equipment features, and ratings.
   2. Detail enclosure types for types other than NEMA 250, Type 1.
   3. Detail bus configuration, current, and voltage ratings.
   4. Detail short-circuit current rating of switchboards and overcurrent protective devices.
   5. Include descriptive documentation of optional barriers specified for electrical insulation and isolation.
   6. Detail utility company's metering provisions with indication of approval by utility company.
   7. Include evidence of UL ~~NRTL~~ listing for series rating of installed devices. Series rated devices shall be provided if specified on the drawings.
   8. Detail features, characteristics, ratings, and factory settings of individual overcurrent protective devices and auxiliary components.
   9. Include time-current coordination curves for each type and rating of overcurrent protective device included in switchboards. Submit on translucent log-log graft paper; include selectable ranges for each type of overcurrent protective device.
   10. Include diagram and details of proposed mimic bus.
   11. Include schematic and wiring diagrams for power, signal, and control wiring.

C. Samples: Representative portion of mimic bus with specified material and finish, for color selection.

1.6 INFORMATIONAL SUBMITTALS

A. Coordination Drawings: Ceiling and floor plans, drawn to scale (1/4”=1”-0”), on which the following items are shown and coordinated with each other, based on input from installers of the items involved:
   1. Show structural members e.g columns, beams, doors etc. within the area where switchboards are located.

B. Qualification Data: For qualified **testing agency**.

C. Seismic Qualification Certificates: Submit certification that switchboards, overcurrent protective devices, accessories, and components will withstand seismic forces defined in Section 260548 "Vibration and Seismic Controls for Electrical Systems." Include the following:
   1. Basis for Certification: Indicate whether withstand certification is based on actual test of assembled components or on calculation.
   2. Dimensioned Outline Drawings of Equipment Unit: Identify center of gravity and locate and describe mounting and anchorage provisions.
   3. Detailed description of equipment anchorage devices on which the certification is based and their installation requirements.

D. Field Quality-Control Reports:
   1. Test procedures used.
   2. Test results that comply with requirements.
   3. Results of failed tests and corrective action taken to achieve test results that comply with requirements.
   4. Submit within two (2) weeks of completion of tests.

1.7 CLOSEOUT SUBMITTALS

A. Operation and Maintenance Data: For switchboards and components to include in emergency, operation, and maintenance manuals. In addition to items specified in Section 017823 "Operation and Maintenance Data," include the following:
   1. Routine maintenance requirements for switchboards and all installed components.
   2. Manufacturer's written instructions for testing and adjusting overcurrent protective devices.
   3. Time-current coordination curves for each type and rating of overcurrent protective device included in switchboards. Submit on translucent log-log graft paper; include selectable ranges for each type of overcurrent protective device.

1.8 MAINTENANCE MATERIAL SUBMITTALS

A. Furnish extra materials that match products installed and that are packaged with protective covering for storage and identified with labels describing contents.

1. Potential Transformer Fuses: Equal to 10 percent of quantity installed for each size and type, but no fewer than two of each size and type.
2. Control-Power Fuses: Equal to 10 percent of quantity installed for each size and type, but no fewer than two of each size and type.
3. Fuses and Fusible Devices for Fused Circuit Breakers: Equal to 10 percent of quantity installed for each size and type, but no fewer than three of each size and type.
4. Fuses for Fused Switches: Equal to 10 percent of quantity installed for each size and type, but no fewer than three of each size and type.
5. Fuses for Fused Power-Circuit Devices: Equal to 10 percent of quantity installed for each size and type, but no fewer than three of each size and type.
6. Indicating Lights: Equal to 10 percent of quantity installed for each size and type, but no fewer than one of each size and type.

1.9 QUALITY ASSURANCE

A. If alternate manufacturer of products other than what are specified in this section are submitted, all necessary documents not limited to cut sheets, technical information, test reports from recognized testing labs and factory test reports shall be submitted to the satisfaction of the owner/engineer to ensure quality and conformance to the specifications. Additional testing shall be undertaken if it is concluded by the owner/engineer that the submitted test reports are either insufficient or do not include all tests necessary for product acceptance. The tests shall be conducted by a recognized lab acceptable to the owner/engineer and all tests shall be witnessed by owner's/engineer's personnel. All testing procedures and test results shall be satisfactory to the owner/engineer. Contractor shall be responsible for arranging the tests, for transportation, food and lodging for minimum of one owner's/engineer's representative to witness the test at the testing lab. Include all costs for the above in the bid.

B. Contractor shall ensure that the manufacturer has a minimum of 15 years experience in the production of Switchboards similar to the type and size specified in this project.

C. Manufacturer shall have ISO 9001 or 9002 Certification.

D. Manufacturer shall have ability to readily provide replacement parts for a minimum period of ten (10) years, from the date of completion of the project. Furnish a letter from the manufacturer confirming the availability.

E. Switchboards shall be assembled at the manufacturer's own manufacturing facility using its own major devices (e.g., circuit breakers) for the assembly. These devices shall be normally carried by the manufacturer as standard catalog items.

F. Switchboard shall comply with seismic zone applicable to the project. Unless otherwise indicated, verify requirements with Architect or Structural Engineer of Record (SEOR). Provide certified test reports of shake table test done by manufacturer on similar units.

G. Materials and equipment shall be new, modern in design and shall not have been in prior service except as required by factory tests. Major components (e.g., primary switch, transformer, and switchboard) shall be manufactured within six months of installation.

H. Source Limitations: Obtain switchboards, overcurrent protective devices and accessories through one source from a single manufacturer through a local distributor unless otherwise indicated. All power distribution equipment shall be of the same manufacturer as the substation.

I. Comply with NEMA PB 2.

J. Comply with NFPA 70.

K. Comply with UL 891.

L. Installer Qualifications: An employer of workers qualified as defined in NEMA PB 2.1 and trained in electrical safety as required by NFPA 70E.

M. Product Options: Drawings indicate size, profiles, and dimensional requirements of switchboards and are based on the specific system indicated. Refer to Part 2 "Product Requirements."

N. Electrical Components, Devices, and Accessories: UL Listed and labeled as defined in NFPA 70, Article 100-and marked for intended location and application.

O. Testing Agency Qualifications: Member of NETA;
   1. Testing agency shall be an independent company; shall have been a member of NETA for a minimum of ten (10) years and has permanent in-house testing engineers and technicians involved with testing of switchboards and OCPDs similar to those specified on this project.
   2. Testing company shall be located with 50 miles radius of the project.
   3. Testing Agency's Field Supervisor: Certified by NETA to supervise on-site testing to supervise on-site testing specified in Part 3.
   4. Field Testing technician and supervisor shall have minimum ten (10) years experience in field testing of switchboards similar to the type and rating specified on this project.

P. Product Selection for Restricted Space: Drawings indicate maximum dimensions for switchboards including clearances between switchboards and adjacent surfaces and other items. Comply with indicated maximum dimensions.

1.10 DELIVERY, STORAGE, AND HANDLING

A. Deliver, store, protect and handle products in accordance with manufacturer's recommended practices and as listed in Installation and Maintenance Manual.

B. Each switchboard section shall be shipped in individual shipping splits for ease of handling. They shall be mounted on shipping skids and individually wrapped.

C. Deliver switchboards in sections or lengths that can be moved past obstructions in delivery path at site.

D. Inspect and report damage to carrier within their required time period.

E. Store indoors in clean dry space with uniform temperature to prevent condensation. Protect from exposure to dirt, fumes, water, corrosive substances, and physical damage.

F. If stored in areas subjected to weather, cover switchboards to provide protection from weather, dirt, dust, corrosive substances, and physical damage.

G. Remove loose packing and flammable materials from inside switchboards and **install temporary electric heating (250 W per section)** to prevent condensation.

H. Handle and prepare switchboards for installation according to **NECA 400**.

1.11 PROJECT CONDITIONS

A. Installation Pathway: Remove and replace access fencing, doors, lift-out panels, and structures to provide pathway for moving switchboards into place.

B. Environmental Limitations:
1. Do not deliver or install switchboards until spaces are enclosed and weathertight, wet work in spaces is complete and dry, work above switchboards is complete, and temporary HVAC system is operating and maintaining ambient temperature and humidity conditions at occupancy levels during the remainder of the construction period.
2. Rate equipment for continuous operation under the following conditions unless otherwise indicated:
   a. Ambient Temperature: Not exceeding 104 deg F (40 deg C).
   b. Altitude: Not exceeding 6600 feet (2000 m).

C. Service Conditions: NEMA PB 2, usual service conditions, as follows:
1. Ambient temperatures within limits specified.
2. Altitude not exceeding 6600 feet (2000 m).

D. Interruption of Existing Electric Service: Do not interrupt electric service to facilities occupied by Owner or others unless permitted under the following conditions and then only after arranging to provide temporary electric service according to requirements indicated:
1. Notify **Owner** no fewer than fourteen (14) days in advance of proposed interruption of electric service.
2. Do not proceed with interruption of electric service without **Owner's** written permission.
3. All utility shutdowns will be done by Owner's authorized personnel unless otherwise noted. Coordinate through Owner's Representative.
4. Comply with NFPA 70E.
5. Provide temporary standby power through a standby diesel quiet type back-up generator complete with fuel and 7/24 monitoring if the existing service interruption exceeds 2 hours. Coordinate additional requirements with owner minimum fourteen days in advance. Indicate method of providing temporary electric service.

1.12 COORDINATION

A. Coordinate layout and installation of switchboards and components with other construction that penetrates walls or is supported by them, including electrical and other types of equipment, raceways, piping, encumbrances to workspace clearance requirements, and adjacent surfaces. Maintain required workspace clearances and required clearances for equipment access doors and panels.

B. Coordinate sizes and locations of concrete bases with actual equipment provided. Cast anchor-bolt inserts into bases. Concrete, reinforcement, and formwork requirements are specified with concrete.

1.13 WARRANTY

A. Special Warranty: Manufacturer's standard form in which manufacturer agrees to repair or replace SURGE PROTECTION DEVICES that fail in materials or workmanship within specified warranty period.
   1. Warranty Period: **Five** (5) years from date of Substantial Completion.

PART 2 - PRODUCTS

2.1 MANUFACTURED UNITS

A. Manufacturers: Subject to compliance with requirements, provide products by one of the following:
   1. Square D; a brand of Schneider Electric
   2. Eaton Electrical Inc.; Cutler-Hammer Business Unit.
   3. General Electric Company; GE Consumer & Industrial - Electrical Distribution.
   4. Siemens Energy & Automation, Inc.

B. Front-Connected, Front-Accessible Switchboards:
   1. Main Devices: **Fixed, individually** mounted unless otherwise indicated.
   2. Branch Devices: Panel mounted for sizes up to 400A.
   3. Sections front and rear aligned.

C. Nominal System Voltage: **208Y/120 V**

D. Main-Bus Continuous: **2000**A.

E. Seismic Requirements: Fabricate and test switchboards according to IEEE 344 to withstand seismic forces defined in Section 260548 "Vibration and Seismic Controls for Electrical Systems."

F. Indoor Enclosures: Steel, NEMA 250, **Type 1**.

G. Enclosure Finish for Indoor Units: Factory-applied finish in manufacturer's **standard gray** finish over a rust-inhibiting primer on treated metal surface.

H. Barriers: Between adjacent switchboard sections.

I. Insulation and isolation for **main bus of main section and** main and vertical buses of feeder sections.

J. Utility Metering Compartment: Fabricated, barrier compartment and section complying with utility company's requirements; hinged sealed door; buses provisioned for mounting utility company's current transformers and potential transformers or potential taps as required by utility company. If separate vertical section is required for utility metering, match and align with basic switchboard. Provide service entrance label and necessary applicable service entrance features.

K. Customer Metering Compartment: A separate customer metering compartment and section with front hinged door, for indicated metering, and current transformers for each meter. Current transformer secondary wiring shall be terminated on shorting-type terminal blocks. For switchboards with space heaters, provide CTs ahead of the main so that power used by the space heaters is recorded by the meter too.

L. Bus Transition and Incoming Pull Sections: Matched and aligned with basic switchboard.

M. Hinged Front Panels: Allow access to circuit breaker, metering, accessory, and blank compartments.

N. Pull Box on Top of Switchboard:
1. Provide a proper size (per NEC) pull box on the top of the switchboard.
2. Adequate ventilation to maintain temperature in pull box within same limits as switchboard.
3. Set back from front to clear circuit-breaker removal mechanism.
4. Removable covers shall form top, front, and sides. Top covers at rear shall be easily removable for drilling and cutting.
5. Bottom shall be insulating, fire-resistive material with separate holes for cable drops into switchboard.
6. Cable supports shall be arranged to facilitate cabling and adequate to support cables indicated, including those for future installation.

O. Buses and Connections: Three phase, four wire unless otherwise indicated.
1. Phase- and Neutral-Bus Material: Hard-drawn copper of 98 percent conductivity, **silver-plated,** or copper feeder circuit-breaker line connections.
2. Phase- and Neutral-Bus Material: Tin-plated, high-strength, electrical-grade aluminum alloy with tin-plated aluminum circuit-breaker line connections.
3. Phase- and Neutral-Bus Material: Hard-drawn copper of 98 percent conductivity**, silver-plated,** or tin-plated, high-strength, electrical-grade aluminum alloy.
4. Load Terminals: Insulated, rigidly braced, runback bus extensions, of same material as through buses, equipped with **mechanical** connectors for outgoing circuit conductors. Provide load terminals for future circuit-breaker positions at full-ampere rating of circuit-breaker position.
5. Ground Bus: **1/4-by-2-inch- (6-by-50-mm-)** hard-drawn copper of 98 percent conductivity, equipped with [**mechanical** connectors for feeder and branch-circuit ground conductors. For busway feeders, extend insulated equipment grounding cable to busway ground connection and support cable at intervals in vertical run.
6. Main Phase Buses and Equipment Ground Buses: Uniform capacity for entire length of switchboard's main and distribution sections. Provide for future extensions from both ends.

7. Neutral Buses: 50 percent of the ampacity of phase buses unless otherwise indicated, equipped with **mechanical** connectors for outgoing circuit neutral cables. Brace bus extensions for busway feeder neutral bus.
8. Neutral Buses: 100 percent of the ampacity of phase buses unless otherwise indicated, equipped with **mechanical** connectors for outgoing circuit neutral cables. Brace bus extensions for busway feeder neutral bus.
9. Isolation Barrier Access Provisions: Permit checking of bus-bolt tightness.

P. Future Devices: Equip compartments with mounting brackets, supports, bus connections, and appurtenances at full rating of circuit-breaker compartment.

Q. Bus-Bar Insulation: Factory-applied, flame-retardant, tape wrapping of individual bus bars or flame-retardant, spray-applied insulation. Minimum insulation temperature rating of 105 deg C.

R. Fungus Proofing: Permanent fungicidal treatment for overcurrent protective devices and other components including instruments and instrument transformers.

2.2 SURGE PROTECTIVE DEVICES (SPD)

~~A.~~ Manufacturers: Subject to compliance with requirements, **provide products by one of the following**
1. Square D; a brand of Schneider Electric.
2. Eaton Electrical Inc.; Cutler-Hammer Business Unit.
3. General Electric Company; GE Consumer & Industrial - Electrical Distribution.
4. Siemens Energy & Automation, Inc.

B. Surge Protection Device Description: IEEE C62.41-compliant, integrally mounted, **bolt-on**, solid-state, parallel-connected, **modular (with field-replaceable modules)** type, with sine-wave tracking suppression and filtering modules, UL 1449, second edition, short-circuit current rating matching or exceeding the switchboard short-circuit rating, and with the following features and accessories:
1. Fuses rated at 200-kA interrupting capacity.
2. Fabrication using bolted compression lugs for internal wiring.
3. Integral disconnect switch.
4. Redundant suppression circuits.
5. Redundant replaceable modules.
6. Arrangement with wire connections to phase buses, neutral bus, and ground bus.
7. LED indicator lights for power and protection status.
8. Audible alarm, with silencing switch, to indicate when protection has failed.
9. Form-C contacts rated at 5 A and 250-V ac, one normally open and one normally closed, for remote monitoring of system operation. Contacts shall reverse position on failure of any surge diversion module or on opening of any current-limiting device. Coordinate with building power monitoring and control system.
10. **Six**-digit, transient-event counter set to totalize transient surges.

C. Peak Single-Impulse Surge Current Rating: 120 kA per mode/240 kA per phase, UON on drawings.

D. Withstand Capabilities: 12,000 IEEE C62.41, Category C3 (10 kA), 8-by-20-mic.sec. surges with less than 5 percent change in clamping voltage.

E. Protection modes and UL 1449 SVR for 240/120-V, three-phase, four-wire circuits with high leg shall be as follows:
   1. Line to Neutral: 400 V, 800 V from high leg.
   2. Line to Ground: 400 V.
   3. Neutral to Ground: 400 V.

2.3 DISCONNECTING AND OVERCURRENT PROTECTIVE DEVICES

A. Molded-Case Circuit Breaker (MCCB): Comply with UL 489, with interrupting capacity (AIC) to meet available fault currents.
   1. Thermal-Magnetic Circuit Breakers: Inverse time-current element for low-level overloads, and instantaneous magnetic trip element for short circuits. Adjustable magnetic trip setting for circuit-breaker frame sizes 250 A and larger.
   2. Adjustable Instantaneous-Trip Circuit Breakers: Magnetic trip element with front-mounted, field-adjustable trip setting.
   3. Electronic trip circuit breakers with rms sensing; field-replaceable rating plug or field-replicable electronic trip; field replaceable and the following field-adjustable settings:
      a. Instantaneous trip.
      b. Long- and short-time pickup levels.
      c. Long- and short-time time adjustments.
      d. Ground-fault pickup level, time delay, and I^2t response.
   4. Current-Limiting Circuit Breakers: Frame sizes 400 A and smaller; let-through ratings less than NEMA FU 1, RK-5.
   5. GFCI Circuit Breakers: Single- and two-pole configurations with Class A ground-fault protection (6-mA trip).
   6. Ground-Fault Equipment Protection (GFEP) Circuit Breakers: Class B ground-fault protection (30-mA trip).
   7. Molded-Case Circuit-Breaker (MCCB) Features and Accessories:
      a. Not all accessories and options listed in subparagraphs below are available for every rating and from every listed manufacturer. Verify availability and unique characteristics with manufacturers selected.
      b. Standard frame sizes, trip ratings, and number of poles.
      c. See Editing Instruction No. 5 in the Evaluations for guidance on using mechanical vs. compression lugs.
      d. Lugs: Mechanical style, suitable for number, size, trip ratings, and conductor material.
      e. Application Listing: Appropriate for application; Type SWD for switching fluorescent lighting loads; Type HID for feeding fluorescent and high-intensity discharge (HID) lighting circuits.
      f. Select first option in first subparagraph below for solid-state trip units; select second option for thermal-magnetic trip units. If selecting second option, also retain "Shunt Trip" Subparagraph below.
      g. Ground-Fault Protection: Integrally mounted relay and trip unit with adjustable pickup and time-delay settings, push-to-test feature, and ground-fault indicator.
      h. Zone-Selective Interlocking: Integral with electronic trip unit; for interlocking ground-fault protection function.

i. Communication Capability: Circuit-breaker-mounted communication module with functions and features compatible with power monitoring and control system specified in Section 260913 "Electrical Power Monitoring and Control."
j. Shunt Trip: 120-V trip coil energized from separate circuit, set to trip at 75 percent of rated voltage.
k. Undervoltage Trip: Set to operate at 35 to 75 percent of rated voltage without intentional time delay.
l. Auxiliary Contacts: Two SPDT switches with "a" and "b" contacts; "a" contacts mimic circuit-breaker contacts, "b" contacts operate in reverse of circuit-breaker contacts.
m. Key Interlock Kit: Externally mounted to prohibit circuit-breaker operation; key shall be removable only when circuit breaker is in off position.

B. Insulated-Case Circuit Breaker (ICCB): 100 percent rated main, sealed, insulated-case power circuit breaker with interrupting capacity rating to meet available fault current.
a. Drawout circuit-breaker mounting.
b. Two-step, stored-energy closing.
c. Full-function, microprocessor-based trip units with interchangeable rating plug, trip indicators, and the following field-adjustable settings:
d. Retain one or more of first four subparagraphs below; coordinate required adjustable settings with Section 260573 "Overcurrent Protective Device Coordination Study." See "Electronic rms Trip versus MCCBs" Paragraph in "Disconnecting and Overcurrent Protective Devices" Article in the Evaluations for additional features available for standard- and full-function trip units.
e. Instantaneous trip.
f. Long- and short-time time adjustments.
g. Ground-fault pickup level, time delay, and I2t response.
h. <Insert settings>.
i. Zone-Selective Interlocking: Integral with electronic trip unit; for interlocking ground-fault protection function.
j. Remote trip indication and control.
k. Communication Capability: Integral communication module with functions and features compatible with power monitoring and control system specified in Section 260913 "Electrical Power Monitoring and Control."
l. Key Interlock Kit: Externally mounted to prohibit circuit-breaker operation; key shall be removable only when circuit breaker is in off position.
m. Retain voltage in subparagraph below to match control-power supply.
n. Control Voltage: [40-V dc] [125-V dc] [250-V dc] [120-V ac].

C. Bolted-Pressure Contact Switch: Operating mechanism uses rotary-mechanical-bolting action to produce and maintain high clamping pressure on the switch blade after it engages the stationary contacts.
1. Manufacturers: Subject to compliance with requirements, **provide products by one of the following**:
a. Square D; a brand of Schneider Electric
b. Eaton Electrical Inc.; Cutler-Hammer Business Unit.
c. Pringle Electrical Manufacturing Company, Inc.
d. Siemens Energy & Automation, Inc.
e. Boltswitch, Inc.
2. Main-Contact Interrupting Capability: Minimum of 12 times the switch current rating.

3. Operating Mechanism: Manual handle operation to close switch; stores energy in mechanism for opening and closing.
   a. Electrical Trip: Operation of lever or push-button trip switch, or trip signal from ground-fault relay or remote-control device, causes switch to open.
   b. Mechanical Trip: Operation of mechanical lever, push button, or other device causes switch to open.
4. Auxiliary Switches: Factory installed, single pole, double throw, with leads connected to terminal block, and including one set more than quantity required for functional performance indicated.
5. Service-Rated Switches: Labeled for use as service equipment.
6. Ground-Fault Relay: Comply with UL 1053; self-powered type with mechanical ground-fault indicator, test function, tripping relay with internal memory, and three-phase current transformer/sensor.
   a. Configuration: **Integrally mounted** relay and trip unit with adjustable pickup and time-delay settings, push-to-test feature, and ground-fault indicator.
   b. Internal Memory: Integrates the cumulative value of intermittent arcing ground-fault currents and uses the effect to initiate tripping.
   c. No-Trip Relay Test: Permits ground-fault simulation test without tripping switch.
   d. Test Control: Simulates ground fault to test relay and switch (or relay only if "no-trip" mode is selected).
7. Open-Fuse Trip Device: Arranged to trip switch open if a phase fuse opens.

D. High-Pressure, Butt-Type Contact Switch: Operating mechanism uses butt-type contacts and a spring-charged mechanism to produce and maintain high-pressure contact when switch is closed.
1. Manufacturers: Subject to compliance with requirements, **provide products by one of the following**:
   a. General Electric Company; GE Consumer & Industrial - Electrical Distribution.
2. Main-Contact Interrupting Capability: Minimum of 12 times the switch current rating.
3. Operating Mechanism: Manual handle operation to close switch; stores energy in mechanism for opening and closing.
   a. Electrical Trip: Operation of lever or push-button trip switch, or trip signal from ground-fault relay or remote-control device, causes switch to open.
   b. Mechanical Trip: Operation of mechanical lever, push button, or other device causes switch to open.
4. Auxiliary Switches: Factory installed, single pole, double throw, with leads connected to terminal block, and including one set more than quantity required for functional performance indicated.
5. Service-Rated Switches: Labeled for use as service equipment.
6. Ground-Fault Relay: Comply with UL 1053; self-powered type with mechanical ground-fault indicator, test function, tripping relay with internal memory, and three-phase current transformer/sensor.
   a. Configuration: **Integrally mounted** relay and trip unit with adjustable pickup and time-delay settings, push-to-test feature, and ground-fault indicator.
   b. Internal Memory: Integrates the cumulative value of intermittent arcing ground-fault currents and uses the effect to initiate tripping.
   c. No-Trip Relay Test: Permits ground-fault simulation test without tripping switch.
   d. Test Control: Simulates ground fault to test relay and switch (or relay only if "no-trip" mode is selected).
7. Open-Fuse Trip Device: Arranged to trip switch open if a phase fuse opens.

E. Fused Switch: NEMA KS 1, Type HD; clips to accommodate specified fuses; lockable handle.

F. Fuses are specified in Section 262813 "Fuses."

2.4 INSTRUMENTATION

A. Instrument Transformers: IEEE C57.13, NEMA EI 21.1, and the following:
   1. Potential Transformers: IEEE C57.13; 120 V, 60 Hz, **single** secondary; disconnecting type with integral fuse mountings. Burden and accuracy shall be consistent with connected metering and relay devices.
   2. Current Transformers: IEEE C57.13; 5 A, 60 Hz, secondary; **wound** type; **single** secondary winding and secondary shorting device. Burden and accuracy shall be consistent with connected metering and relay devices.
   3. Control-Power Transformers: Dry type, mounted in separate compartments for units larger than 3 kVA.
   4. Current Transformers for Neutral and Ground-Fault Current Sensing: Connect secondary wiring to ground overcurrent relays, via shorting terminals, to provide selective tripping of main and tie circuit breaker. Coordinate with feeder circuit-breaker, ground-fault protection.

B. Multifunction Digital-Metering Monitor: Microprocessor-based unit suitable for three- or four-wire systems and with the following features:
   1. Switch-selectable digital display of the following values with maximum accuracy tolerances as indicated:
      a. Phase Currents, Each Phase: Plus or minus 1 percent.
      b. Phase-to-Phase Voltages, Three Phase: Plus or minus 1 percent.
      c. Phase-to-Neutral Voltages, Three Phase: Plus or minus 1 percent.
      d. Megawatts: Plus or minus 2 percent.
      e. Megavars: Plus or minus 2 percent.
      f. Power Factor: Plus or minus 2 percent.
      g. Frequency: Plus or minus 0.5 percent.
      h. Accumulated Energy, Megawatt Hours: Plus or minus 2 percent; accumulated values unaffected by power outages up to 72 hours.
      i. Megawatt Demand: Plus or minus 2 percent; demand interval programmable from five to 60 minutes.
      j. Contact devices to operate remote impulse-totalizing demand meter.
   2. Mounting: Display and control unit flush or semiflush mounted in instrument compartment door.
   3. Digital Meter shall be manufactured by the one following manufacturers: Square D; Eaton-Cutler Hammer.

C. Ammeters, Voltmeters, and Power-Factor Meters: ANSI C39.1.
   1. Meters: 4-inch (100-mm) diameter or 6 inches (150 mm) square, flush or semiflush, with antiparallax 250-degree scales and external zero adjustment.
   2. Voltmeters: Cover an expanded-scale range of nominal voltage plus 10 percent.

D. Instrument Switches: Rotary type with off position.

1. Voltmeter Switches: Permit reading of all phase-to-phase voltages and, where a neutral is indicated, phase-to-neutral voltages.
2. Ammeter Switches: Permit reading of current in each phase and maintain current-transformer secondaries in a closed-circuit condition at all times.

E. Feeder Ammeters: 2-1/2-inch (64-mm) minimum size with 90- or 120-degree scale. Meter and transfer device with off position, located on overcurrent device door for indicated feeder circuits only.

F. Watt-Hour Meters and Wattmeters:
1. Comply with ANSI C12.1.
2. Three-phase induction type with two stators, each with current and potential coil, rated 5 A, 120 V, 60 Hz.
3. Suitable for connection to three- and four-wire circuits.
4. Potential indicating lamps.
5. Adjustments for light and full load, phase balance, and power factor.
6. Four-dial clock register.
7. Integral demand indicator.
8. Contact devices to operate remote impulse-totalizing demand meter.
9. Ratchets to prevent reverse rotation.
10. Removable meter with drawout test plug.
11. Semiflush mounted case with matching cover.
12. Appropriate multiplier tag.

G. Impulse-Totalizing Demand Meter:
1. Comply with ANSI C12.1.
2. Suitable for use with switchboard watt-hour meter, including two-circuit totalizing relay.
3. Cyclometer.
4. Four-dial, totalizing kilowatt-hour register.
5. Positive chart drive mechanism.
6. Capillary pen holding a minimum of one month's ink supply.
7. Roll chart with minimum 31-day capacity; appropriate multiplier tag.
8. Capable of indicating and recording **15** minute integrated demand of totalized system.

2.5 CONTROL POWER

A. Control Circuits: 120-V ac, supplied through secondary disconnecting devices from control-power transformer.

B. Control Circuits: 120-V ac, supplied from remote branch circuit.

C. Control-Power Fuses: Primary and secondary fuses for current-limiting and overload protection of transformer and fuses for protection of control circuits.

D. Control Wiring: Factory installed, with bundling, lacing, and protection included. Provide flexible conductors for No. 8 AWG and smaller, for conductors across hinges, and for conductors for interconnections between shipping units.

2.6 ACCESSORY COMPONENTS AND FEATURES

A. Accessory Set: Include tools and miscellaneous items required for overcurrent protective device test, inspection, maintenance, and operation.

B. Portable Test Set: For testing functions of solid-state trip devices without removing from switchboard. Include relay and meter test plugs suitable for testing switchboard meters and switchboard class relays.

C. Spare-Fuse Cabinet: Suitably identified, wall-mounted, lockable, compartmented steel box or cabinet. Arrange for wall mounting.

2.7 IDENTIFICATION

A. Mimic Bus: Continuously integrated mimic bus factory applied to front of switchboard. Arrange in single-line diagram format, using symbols and letter designations consistent with final mimic-bus diagram. Mimic bus name plate shall be at least 0.0625-inch- (1.588 mm-) thick laminated plastic (Gravoply) located at eye level on front cover of the switchboard.

B. Coordinate mimic-bus segments with devices in switchboard sections to which they are applied. Produce a concise visual presentation of principal switchboard components and connections.

C. Presentation Media: Painted graphics in color contrasting with background color to represent bus and components, complete with lettered designations.

D. Service Equipment Label: UL labeled for use as service equipment for switchboards with one or more service disconnecting and overcurrent protective devices.

PART 3 - EXECUTION

3.1 EXAMINATION

A. Receive, inspect, handle, and store switchboards according to **NECA 400** and **NEMA PB 2.1**.

B. Examine switchboards before installation to verify compliance with approved shop drawings. Reject switchboards that are moisture damaged or physically damaged.

C. Examine elements and surfaces to receive switchboards for compliance with installation tolerances and other conditions affecting performance of the Work.

D. Proceed with installation only after unsatisfactory conditions have been corrected to the satisfaction of the owner.

3.2 INSTALLATION

A. Install switchboards and accessories according to **NECA 400** and **NEMA PB 2.1**.

B. Equipment Mounting: Install switchboards on concrete base, 4-inch (100-mm) nominal thickness. Comply with requirements for concrete base specified in **Section 033000 "Cast-in-Place Concrete."**
   1. Install dowel rods to connect concrete base to concrete floor. Unless otherwise indicated, install dowel rods on 18-inch (450-mm) centers around the full perimeter of concrete base.
   2. For supported equipment, install epoxy-coated anchor bolts that extend through concrete base and anchor into structural concrete floor.
   3. Place and secure anchorage devices. Use setting drawings, templates, diagrams, instructions, and directions furnished with items to be embedded.
   4. Install anchor bolts to elevations required for proper attachment to switchboards.

C. Temporary Lifting Provisions: Remove temporary lifting eyes, channels, and brackets and temporary blocking of moving parts from switchboard units and components.

D. Comply with mounting and anchoring requirements specified in Section 260548 "Vibration and Seismic Controls for Electrical Systems."

E. Operating Instructions: Frame and mount the printed basic operating instructions for switchboards, including control and key interlocking sequences and emergency procedures. Fabricate frame of finished wood or metal and cover instructions with clear acrylic plastic. Mount on front of switchboards.

F. Install filler plates in unused spaces of panel-mounted sections.

G. Install overcurrent protective devices, surge protection devices, and instrumentation.
   1. Set field-adjustable switches and circuit-breaker trip ranges in accordance with the recommendations of the Overcurrent Protective Device Short Circuit, Coordination and Arc Flash Study.

H. Install spare-fuse cabinet.

I. Comply with NECA 1.

3.3 CONNECTIONS

A. Comply with requirements for terminating feeder bus specified in Section 262500 "Enclosed Bus Assemblies." Drawings indicate general arrangement of bus, fittings, and specialties.

B. Comply with requirements for terminating cable trays specified in Section 260536 "Cable Trays for Electrical Systems." Drawings indicate general arrangement of cable trays, fittings, and specialties.

C. Ground equipment according to Section 260526 "Grounding and Bonding for Electrical Systems."

D. Connect wiring according to Section 260519 "Low-Voltage Electrical Power Conductors and Cables."

3.4 IDENTIFICATION

A. Identify field-installed conductors, interconnecting wiring, and components; provide warning signs complying with requirements for identification specified in Section 260553 "Identification for Electrical Systems."

B. Switchboard Nameplates: Label each switchboard compartment with a nameplate complying with requirements for identification specified in Section 260553 "Identification for Electrical Systems."

C. Device Nameplates: Label each disconnecting, and overcurrent protective device and each meter and control device mounted in compartment doors with a nameplate complying with requirements for identification specified in Section 260553 "Identification for Electrical Systems."

3.5 FIELD QUALITY CONTROL

A. Testing Agency: Engage a qualified testing agency to perform tests and inspections.

B. Perform tests and inspections.
   1. Manufacturer's Field Service: Engage a factory-authorized service representative to inspect components, assemblies, and equipment installations, including connections, start-up and to assist in testing.

C. Acceptance Testing Preparation:
   1. Test insulation resistance for each switchboard bus, component, connecting supply, feeder, and control circuit.
   2. Test continuity of each circuit.

D. Tests and Inspections:
   1. Perform each visual and mechanical inspection and electrical test stated in NETA Acceptance Testing Specification. Certify compliance with test parameters.
   2. All tests shall be witnessed by owner’s representative. Provide minimum fourteen (14) days advance notice.
   3. Correct malfunctioning units on-site, where possible, and retest to demonstrate compliance; otherwise, replace with new units and retest.
   4. Perform the following infrared scan tests and inspections and prepare reports:
      a. Initial Infrared Scanning: After Substantial Completion, but not more than 60 days after Final Acceptance, perform an infrared scan of each switchboard. Remove front and rear panels so joints and connections are accessible to portable scanner.
      b. Follow-up Infrared Scanning: Perform an additional follow-up infrared scan of each switchboard 11 months after date of Substantial Completion.
      c. Instruments and Equipment:
         1) Use an infrared scanning device designed to measure temperature or to detect significant deviations from normal values. Provide calibration record for device.
   5. Test and adjust controls, remote monitoring, and safeties. Replace damaged and malfunctioning controls and equipment.

E. Switchboard will be considered defective if it does not pass tests and inspections.

F. Prepare test and inspection reports, including a certified report that identifies switchboards included and that describes scanning results. Include notation of deficiencies detected, remedial action taken, and observations after remedial action.

3.6 ADJUSTING

A. Adjust moving parts and operable components to function smoothly and lubricate as recommended by manufacturer.

B. Set field-adjustable circuit-breaker trip ranges **as specified in Section 260573 "Overcurrent Protective Device Coordination Study."**

3.7 PROTECTION

A. Temporary Heating: Apply temporary heat, to maintain temperature according to manufacturer's written instructions, until switchboard is ready to be energized and placed into service.

3.8 DEMONSTRATION

A. **Engage a factory-authorized service representative to train** Owner's maintenance personnel to adjust, operate, and maintain switchboards, overcurrent protective devices, instrumentation, and accessories**, and to use and reprogram microprocessor-based trip, monitoring, and communication units**.

END OF SECTION 262413

SECTION 262416 - PANELBOARDS

PART 1 - GENERAL

1.1 RELATED DOCUMENTS

A. Drawings and general provisions of the Contract, including General and Supplementary Conditions and Division 01 Specification Sections, apply to this Section.

1.2 SUMMARY

A. Section Includes:
   1. Distribution panelboards.
   2. Lighting and appliance branch-circuit panelboards.

B. Related Sections include the following:
   1. Section 260553 “Identification for Electrical Systems”.
   2. Section 260573 "Overcurrent Protective Device Coordination Study" for short-circuit rating of devices and for setting of overcurrent protective devices.

1.3 DEFINITIONS

A. EMI: Electromagnetic interference.

B. GFCI: Ground-fault circuit interrupter.

C. RMS: Root mean square.

D. SPDT: Single pole, double throw

E. SPD: Surge Protective Device

1.4 PERFORMANCE REQUIREMENTS

A. Seismic Performance: Panelboards shall withstand the effects of earthquake motions determined according to **SEI/ASCE 7**.
   1. The term "withstand" means "the unit will remain in place without separation of any parts from the device when subjected to the seismic forces specified **and the unit will be fully operational after the seismic event**."

1.5 ACTION SUBMITTALS

A. Product Data: For each type of panelboard, switching and overcurrent protective device, transient voltage suppression device, accessory, and component indicated. Include dimensions

and manufacturers' technical data on features, performance, electrical characteristics, ratings, and finishes.

B. Shop Drawings: For each panelboard and related equipment.
   1. Include dimensioned plans, elevations, sections, and details. Show tabulations of installed devices, equipment features, and ratings.
   2. Detail enclosure types and details for types other than NEMA 250, Type 1.
   3. Detail bus configuration, current, and voltage ratings.
   4. Short-circuit current rating of panelboards and overcurrent protective devices.
   5. Include evidence of UL ~~NRTL~~ listing for series rating of installed devices. Series rated devices shall be permitted if specified on the drawings.
   6. Detail features, characteristics, ratings, and factory settings of individual overcurrent protective devices and auxiliary components.
   7. Include wiring diagrams for power, signal, and control wiring.
   8. Include time-current coordination curves for each type and rating of overcurrent protective device included in panelboards. Submit on translucent log-log graft paper; include selectable ranges for each type of overcurrent protective device.

1.6 INFORMATIONAL SUBMITTALS

A. Qualification Data: For qualified testing agency.

B. Seismic Qualification Certificates: Submit certification that panelboards, overcurrent protective devices, accessories, and components will withstand seismic forces defined in Section 260548 "Vibration and Seismic Controls for Electrical Systems." Include the following:
   1. Basis for Certification: Indicate whether withstand certification is based on actual test of assembled components or on calculation.
   2. Dimensioned Outline Drawings of Equipment Unit: Identify center of gravity and locate and describe mounting and anchorage provisions.
   3. Detailed description of equipment anchorage devices on which the certification is based and their installation requirements.

C. Field Quality-Control Reports:
   1. Test procedures used.
   2. Test results that comply with requirements.
   3. Results of failed tests and corrective action taken to achieve test results that comply with requirements.
   4. Submit within two (2) weeks of completion of tests.

D. Panelboard Schedules: For installation in panelboards.

1.7 CLOSEOUT SUBMITTALS

A. Operation and Maintenance Data: For panelboards and components to include in emergency, operation, and maintenance manuals. In addition to items specified in Section 017823 "Operation and Maintenance Data," include the following:
   1. Manufacturer's written instructions for testing and adjusting overcurrent protective devices.

2. Time-current curves, including selectable ranges for each type of overcurrent protective device that allows adjustments.

1.8 MAINTENANCE MATERIAL SUBMITTALS

A. Furnish extra materials that match products installed and that are packaged with protective covering for storage and identified with labels describing contents.
   1. Keys: **Two** spares for each type of panelboard cabinet lock.

1.9 QUALITY ASSURANCE

A. If alternate manufacturer of products other than what are specified in this section are submitted, all necessary documents not limited to cut sheets, technical information, test reports from recognized testing labs and factory test reports shall be submitted to the satisfaction of the owner/engineer to ensure quality and conformance to the specifications. Additional testing shall be undertaken if it is concluded by the owner/engineer that the submitted test reports are either insufficient or do not include all tests necessary for product acceptance. The tests shall be conducted by a recognized lab acceptable to the owner/engineer and all tests shall be witnessed by owner's/engineer's personnel. All testing procedures and test results shall be satisfactory to the owner/engineer. Contractor shall be responsible for arranging the tests, for transportation, food and lodging for minimum of one owner's/engineer's representative to witness the test at the testing lab. Include all costs for the above in the bid.

B. Contractor shall ensure that the manufacturer has a minimum of 15 years experience in the production of Panelboards similar to the type and size specified in this project.

C. Manufacturer shall have ISO 9001 or 9002 Certification.

D. Manufacturer shall have ability to readily provide replacement parts for a minimum period of ten (10) years, from the date of completion of the project. Furnish a letter from the manufacturer confirming the availability.

E. Panelboards shall be assembled at the manufacturer's own manufacturing facility using its own major devices (e.g., circuit breakers) for the assembly. These devices shall be normally carried by the manufacturer as standard catalog items.

F. Panelboard shall comply with seismic zone applicable to the project. Unless otherwise indicated, verify requirements with Architect or Structural Engineer of Record (SEOR). Provide certified test reports of shake table test done by manufacturer on similar units as applicable for OSHPD projects.

G. Materials and equipment shall be new, modern in design and shall not have been in prior service except as required by factory tests. Major components (e.g. Circuit breakers) shall be manufactured within six months of installation.

H. Source Limitations: Obtain panelboards, overcurrent protective devices and accessories through one source from a single manufacturer through a local distributor unless otherwise indicated. All power distribution equipment shall be of the same manufacturer as the substation.

I. Comply with NFPA 70.

J. Comply with NEMA PB 1.

K. Comply with UL 891.

L. Installer Qualifications: An employer of workers qualified as defined in NEMA PB 2.1 and trained in electrical safety as required by NFPA 70E.

M. Product Options: Drawings indicate size, profiles, and dimensional requirements of panelboards and are based on the specific system indicated. Refer to Part 2 "Product Requirements."

N. Electrical Components, Devices, and Accessories: UL Listed and labeled as defined in NFPA 70, Article 100—and marked for intended location and application.

O. Testing Agency Qualifications: Member of NETA;
   1. Testing agency shall be an independent company; shall have been a member of NETA for a minimum of ten (10) years and has permanent in-house testing engineers and technicians involved with testing of switchboards, panelboards and OCPDs similar to those specified on this project.
   2. Testing company shall be located with 50 miles radius of the project.
   3. Testing Agency's Field Supervisor: Certified by NETA to supervise on-site testing to supervise on-site testing specified in Part 3.
   4. Field Testing technician and supervisor shall have minimum ten (10) years experience in field testing of switchboards similar to the type and rating specified on this project.

1.10 DELIVERY, STORAGE, AND HANDLING

A. Remove loose packing and flammable materials from inside panelboards; install temporary electric heating (250 W per panelboard) to prevent condensation.

B. Handle and prepare panelboards for installation according to **NECA 407**.

1.11 PROJECT CONDITIONS

A. Environmental Limitations:
   1. Do not deliver or install panelboards until spaces are enclosed and weathertight, wet work in spaces is complete and dry, work above panelboards is complete, and temporary HVAC system is operating and maintaining ambient temperature and humidity conditions at occupancy levels during the remainder of the construction period.
   2. Rate equipment for continuous operation under the following conditions unless otherwise indicated:
      a. Ambient Temperature: Not exceeding minus 22 deg F (minus 30 deg C) to plus 104 deg F (plus 40 deg C).
      b. Altitude: Not exceeding 6600 feet (2000 m).

B. Service Conditions: NEMA PB 1, usual service conditions, as follows:

1. Ambient temperatures within limits specified.
2. Altitude not exceeding 6600 feet (2000 m).

C. Interruption of Existing Electric Service: Do not interrupt electric service to facilities occupied by Owner or others unless permitted under the following conditions and then only after arranging to provide temporary electric service according to requirements indicated:
1. Notify Owner no fewer than **two** days in advance of proposed interruption of electric service.
2. Do not proceed with interruption of electric service without **Owner's** written permission.
3. Comply with NFPA 70E.

1.12 COORDINATION

A. Coordinate layout and installation of panelboards and components with other construction that penetrates walls or is supported by them, including electrical and other types of equipment, raceways, piping, encumbrances to workspace clearance requirements, and adjacent surfaces. Maintain required workspace clearances and required clearances for equipment access doors and panels.

B. Coordinate sizes and locations of concrete bases with actual equipment provided. Cast anchor-bolt inserts into bases. Concrete, reinforcement, and formwork requirements are specified with concrete.

1.13 WARRANTY

A. Special Warranty: Manufacturer's standard form in which manufacturer agrees to repair or replace transient voltage suppression devices that fail in materials or workmanship within specified warranty period.
1. Warranty Period: **Five** years from date of Substantial Completion.

PART 2 - PRODUCTS

2.1 GENERAL REQUIREMENTS FOR PANELBOARDS

A. Fabricate and test panelboards according to IEEE 344 to withstand seismic forces defined in Section 260548 "Vibration and Seismic Controls for Electrical Systems."

B. Enclosures: **Flush** and **Surface** mounted cabinets.
1. Rated for environmental conditions at installed location.
   a. Indoor Dry and Clean Locations: NEMA 250, Type 1.
   b. Outdoor Locations: NEMA 250, Type 3R.
   c. Other Wet or Damp Indoor Locations: NEMA 250, Type 4.
   d. Indoor Locations Subject to Dust, Falling Dirt, and Dripping Noncorrosive Liquids: NEMA 250, Type 5.
2. Front: Secured to box with concealed trim clamps. For surface-mounted fronts, match box dimensions; for flush-mounted fronts, overlap box.

3. Hinged Front Cover: Entire front trim hinged to box and with standard door within hinged trim cover.
4. Skirt for Surface-Mounted Panelboards: Same gage and finish as panelboard front with flanges for attachment to panelboard, wall, and ceiling or floor. No splices shall be permitted inside the skirt.
5. Gutter Extension and Barrier: Same gage and finish as panelboard enclosure; integral with enclosure body. Arrange to isolate individual panel sections. No splices shall be permitted inside gutters.
6. Finishes:
   a. Panels and Trim: **galvanized steel**, factory finished immediately after cleaning and pretreating with manufacturer's standard two-coat, baked-on finish consisting of prime coat and thermosetting topcoat or **Powder coated**
   b. Back Boxes: Same finish as panels and trim.
   c. Fungus Proofing: Permanent fungicidal treatment for overcurrent protective devices and other components.
7. Directory Card: Inside panelboard door, mounted in metal frame with transparent protective cover.

C. Incoming Mains Location: **Top and bottom**.

D. Phase, Neutral, and Ground Buses:
1. Material: Tin-plated aluminum Hard-drawn copper, 98 percent conductivity.
2. Equipment Ground Bus: Adequate for feeder and branch-circuit equipment grounding conductors; bonded to box.
3. Isolated Ground Bus: Adequate for branch-circuit isolated ground conductors; insulated from box.
4. Extra-Capacity Neutral Bus: Neutral bus rated 200 percent of phase bus and UL listed as suitable for nonlinear loads.
5. Split Bus: Vertical buses divided into individual vertical sections.

E. Conductor Connectors: Suitable for use with conductor material and sizes.
1. Material: Copper.
2. Main and Neutral Lugs: Compression type.
3. Ground Lugs and Bus-Configured Terminators: Mechanical type.
4. Feed-Through Lugs: Compression type, suitable for use with conductor material. Locate at opposite end of bus from incoming lugs or main device.
5. In first subparagraph below, NEMA PB 1 allows subfeed lugs to be located on the load or line side of main devices or on main-lugs-only panelboards; however, coordinate with specific manufacturers as some have restrictions on which options are available.
6. Subfeed (Double) Lugs: Compression type suitable for use with conductor material. Locate at same end of bus as incoming lugs or main device.

F. Service Equipment Label: UL ~~NRTL~~ labeled for use as service equipment for panelboards or load centers with one or more main service disconnecting and overcurrent protective devices.

G. Future Devices: Mounting brackets, bus connections, filler plates, and necessary appurtenances required for future installation of devices.

H. Panelboard shall be listed and labeled with UL short circuit rating. If Series Rated Panelboard is specified-the panelboard shall be rated for series-connected system with integral or remote upstream overcurrent protective devices and labeled by UL ~~NRTL.~~ Include size and type of allowable upstream and branch devices, listed and labeled for series-connected short-circuit rating by UL ~~an NRTL.~~

I. Panelboard Short-Circuit Current Rating: Fully rated to interrupt symmetrical short-circuit current available at terminals.

2.2 DISTRIBUTION PANELBOARDS

A. Manufacturers: Subject to compliance with requirements,[**provide products by one of the following manufacturers**]
   1. Square D; a brand of Schneider Electric
   2. Eaton Electrical Inc.; Cutler-Hammer Business Unit.
   3. General Electric Company; GE Consumer & Industrial - Electrical Distribution.
   4. Siemens Energy & Automation, Inc.

B. Panelboards: NEMA PB 1, power and feeder distribution type.

C. Interiors shall be completely factory assembled. These shall be designed such that switching and protective devices can be replaced without disturbing adjacent units and without removing the main bus interiors.

D. Doors: Secured with vault-type latch with tumbler lock; keyed alike.
   1. For doors more than **36 inches (914 mm)** high, provide two latches, keyed alike.

E. Mains: **Circuit breaker** or Main **Lugs only** based on drawings.

F. Branch Overcurrent Protective Devices for Circuit-Breaker Frame Sizes 125 A and Smaller: **Bolt-on** circuit breakers.

G. Branch Overcurrent Protective Devices for Circuit-Breaker Frame Sizes Larger Than 125 A: Bolt-on circuit breakers; plug-in circuit breakers where individual positive-locking device requires mechanical release for removal.

H. Branch Overcurrent Protective Devices: Fused switches.

I. Where indicated, provide circuit breakers UL listed for application at 100% of their continuous ampere rating in their intended enclosure.

J. Contactors in Main Bus: NEMA ICS 2, Class A, **electrically** held, general-purpose controller, with same short-circuit interrupting rating as panelboard.

K. Column-Type Panelboards: Narrow gutter extension, with cover, to overhead junction box equipped with ground and neutral terminal buses.

2.3 LIGHTING AND APPLIANCE BRANCH-CIRCUIT PANELBOARDS

A. Manufacturers: Subject to compliance with requirements, **provide products by one of the following manufacturers**
   1. Square D; a brand of Schneider Electric
   2. Eaton Electrical Inc.; Cutler-Hammer Business Unit.
   3. General Electric Company; GE Consumer & Industrial - Electrical Distribution.
   4. Siemens Energy & Automation, Inc.
   5. <

B. Panelboards: NEMA PB 1, lighting and appliance branch-circuit type.

C. Mains: Circuit breaker or Main Lug Only based on Drawings.

D. Branch Overcurrent Protective Devices: **Bolt-on** circuit breakers, replaceable without disturbing adjacent units.

E. Contactors in Main Bus: NEMA ICS 2, Class A, **electrically** held, general-purpose controller, with same short-circuit interrupting rating as panelboard.
   1. Internal Control-Power Source: Control-power transformer, with fused primary and secondary terminals, connected to main bus ahead of contactor connection.
   2. External Control-Power Source: [120-V branch circuit] [24-V control circuit] <Insert requirement>.

F. Doors: Door-in-door type. Concealed hinges; secured with flush latch with tumbler lock; keyed alike.

2.4 LOAD CENTERS

A. Manufacturers: Subject to compliance with requirements, [**provide products by one of the**

2.5 DISCONNECTING AND OVERCURRENT PROTECTIVE DEVICES

A. Manufacturers: Subject to compliance with requirements, **provide products by one of the following manufacturers**
   1. Square D; a brand of Schneider Electric
   2. Eaton Electrical Inc.; Cutler-Hammer Business Unit.
   3. General Electric Company; GE Consumer & Industrial - Electrical Distribution.
   4. Siemens Energy & Automation, Inc..

B. Molded-Case Circuit Breaker (MCCB): Comply with UL 489, with **interrupting capacity** to meet available fault currents.
   1. Where indicated provide circuit breakers UL listed for application at 100% of their continuous ampere rating in their intended enclosure.
   2. Thermal-Magnetic Circuit Breakers (**below 400A frame**): Inverse time-current element for low-level overloads, and instantaneous magnetic trip element for short circuits. Provide field adjustable magnetic trip setting for circuit-breakers serving motor loads or other special applications as indicated

3. Adjustable Instantaneous-Trip Circuit Breakers: Magnetic trip element with front-mounted, field-adjustable trip setting.
4. Electronic trip circuit breakers **(400A frame size and larger)** with rms sensing; field-replaceable rating plug or field-replaceable electronic trip; and the following field-adjustable settings:
    a. Instantaneous trip.
    b. Long- and short-time pickup levels.
    c. Long- and short-time time adjustments.
    d. Ground-fault pickup level, time delay, and I^2t response.
    e. CBs shall have an integral power supply installed at the factory if required for proper functioning of the breaker. An external power supply shall not be acceptable.
5. Circuit breakers shall have a minimum interrupting rating of 10,000 amperes RMS symmetrical at 240 volts, and 14,000 amperes RMS symmetrical at 480 volts, unless otherwise noted on the drawings. Verify maximum available fault levels from the Short Circuit and Coordination Study. Minimum interrupting rating (AIC) shall be **110% of the available fault level.**
6. Current-Limiting Circuit Breakers: Frame sizes 400 A and smaller; let-through ratings less than NEMA FU 1, RK-5.
7. GFCI Circuit Breakers: Single- and two-pole configurations with Class A ground-fault protection (6-mA trip).
8. Ground-Fault Equipment Protection (GFEP) Circuit Breakers: Class B ground-fault protection (30-mA trip).
9. Arc-Fault Circuit Interrupter (AFCI) Circuit Breakers: Comply with UL 1699; 120/240-V, single-pole configuration.
10. Molded-Case Circuit-Breaker (MCCB) Features and Accessories:
    a. Standard frame sizes, trip ratings, and number of poles.
    b. Lugs: **Compression** style, suitable for number, size, trip ratings, and conductor materials.
    c. Application Listing: Appropriate for application; Type SWD for switching fluorescent lighting loads; Type HID for feeding fluorescent and high-intensity discharge (HID) lighting circuits.
    d. Ground-Fault Protection: **Integrally mounted** relay and trip unit with adjustable pickup and time-delay settings, push-to-test feature, and ground-fault indicator.
    e. Communication Capability: **Circuit-breaker-mounted** communication module with functions and features compatible with power monitoring and control system specified in Section 260913 "Electrical Power Monitoring and Control."
    f. Shunt Trip: **120** -V trip coil energized from separate circuit, set to trip at **55** percent of rated voltage.
    g. Undervoltage Trip: Set to operate at 35 to 75 percent of rated voltage **with field-adjustable 0.1- to 0.6-second** time delay.
    h. Auxiliary Contacts: **One SPDT switch** with "a" and "b" contacts; "a" contacts mimic circuit-breaker contacts and "b" contacts operate in reverse of circuit-breaker contacts.
    i. Alarm Switch: Single-pole, normally open contact that actuates only when circuit breaker trips.
    j. Key Interlock Kit: Externally mounted to prohibit circuit-breaker operation; key shall be removable only when circuit breaker is in off position.
    k. Zone-Selective Interlocking: Integral with electronic trip unit; for interlocking ground-fault protection function with other upstream or downstream devices.

l. Multipole units enclosed in a single housing or factory assembled to operate as a single unit.
m. Handle Padlocking Device: Fixed attachment, for locking circuit-breaker handle in **on or off** position.
n. Handle Clamp: Loose attachment, for holding circuit-breaker handle in on position.
o. Circuit breaker handle locks shall be provided for all circuits that supply exit signs, emergency lights, energy management, and control system (EMCS) panels and fire alarm panels.

C. Fused Switch: NEMA KS 1, Type HD; clips to accommodate specified fuses; lockable handle.
1. Fuses, and Spare-Fuse Cabinet: Comply with requirements specified in Section 262813 "Fuses."
2. Fused Switch Features and Accessories: Standard ampere ratings and number of poles.
3. Auxiliary Contacts: **One** normally open and normally closed contact(s) that operate with switch handle operation.

2.6 PANELBOARD SUPPRESSORS

A. Manufacturers: Subject to compliance with requirements, **provide products by one of the following manufacturers**
1. Square D; a brand of Schneider Electric
2. Current Technology; a subsidiary of Danahar Corporation.
3. Eaton Electrical Inc.; Cutler-Hammer Business Unit.
4. General Electric Company; GE Consumer & Industrial - Electrical Distribution.
5. ~~Liebert Corporation~~.
6. Siemens Energy & Automation, Inc..

B. Surge Protection Device: IEEE C62.41-compliant, integrally mounted, solid-state, parallel-connected, non-modular type, with sine-wave tracking suppression and filtering modules, UL 1449, second edition, short-circuit current rating matching or exceeding the panelboard short-circuit rating, and with the following features and accessories:
1. Accessories:
a. LED indicator lights for power and protection status.
b. Audible alarm, with silencing switch, to indicate when protection has failed.
c. One set of dry contacts rated at 5 A and 250-V ac, for remote monitoring of protection status.

C. Surge Protection Device: IEEE C62.41-compliant, integrally mounted, solid-state, parallel-connected, **modular (with field-replaceable modules)** type, with sine-wave tracking suppression and filtering modules, UL 1449, second edition, short-circuit current rating matching or exceeding the panelboard short-circuit rating, and with the following features and accessories:
1. Accessories:
a. Fuses rated at 200-kA interrupting capacity.
b. Fabrication using bolted compression lugs for internal wiring.
c. Integral disconnect switch.
d. Redundant suppression circuits.

e. Redundant replaceable modules.
f. Arrangement with wire connections to phase buses, neutral bus, and ground bus.
g. LED indicator lights for power and protection status.
h. Audible alarm, with silencing switch, to indicate when protection has failed.
i. Form-C contacts rated at 5 A and 250-V ac, one normally open and one normally closed, for remote monitoring of system operation. Contacts shall reverse position on failure of any surge diversion module or on opening of any current-limiting device. Coordinate with building power monitoring and control system.
j. [**Four**] [**Six**]-digit, transient-event counter set to totalize transient surges.

2. Peak Single-Impulse Surge Current Rating: [160 kA per mode/320 kA per phase] [120 kA per mode/240 kA per phase] [80 kA per mode/160 kA per phase].
3. Minimum single-impulse current ratings, using 8-by-20-mic.sec. waveform described in IEEE C62.41.2.
   a. Line to Neutral: **70,000**A.
   b. Line to Ground: **70,000**A.
   c. Neutral to Ground: **50,000**A.
4. Withstand Capabilities: 12,000 IEEE C62.41, Category C3 (10 kA), 8-by-20-mic.sec. surges with less than 5 percent change in clamping voltage.
5. Protection modes and UL 1449 SVR for grounded wye circuits with **208Y/120**V, three-phase, four-wire circuits shall be as follows:
   a. Line to Neutral: 400 V for 208Y/120
   b. Line to Ground: 400 V for 208Y/120
   c. Neutral to Ground: 400 V for 208Y/120

2.7 ACCESSORY COMPONENTS AND FEATURES

A. Accessory Set: Include tools and miscellaneous items required for overcurrent protective device test, inspection, maintenance, and operation.

B. Portable Test Set: For testing functions of solid-state trip devices without removing from panelboard. Include relay and meter test plugs suitable for testing panelboard meters and switchboard class relays.

PART 3 - EXECUTION

3.1 EXAMINATION

A. Receive, inspect, handle, and store panelboards according to **NECA 407**

B. Examine panelboards before installation. Reject panelboards that are damaged or rusted or have been subjected to water saturation.

C. Examine elements and surfaces to receive panelboards for compliance with installation tolerances and other conditions affecting performance of the Work.

D. Proceed with installation only after unsatisfactory conditions have been corrected.

3.2 INSTALLATION

A. Install panelboards and accessories according to **NECA 407**.

B. Equipment Mounting: Install panelboards on concrete bases, 4-inch (100-mm) nominal thickness. Comply with requirements for concrete base specified in **Section 033000 "Cast-in-Place Concrete." Section 033053 "Miscellaneous Cast-in-Place Concrete."**
   1. Install dowel rods to connect concrete base to concrete floor. Unless otherwise indicated, install dowel rods on 18-inch (450-mm) centers around full perimeter of base.
   2. For panelboards, install epoxy-coated anchor bolts that extend through concrete base and anchor into structural concrete floor.
   3. Place and secure anchorage devices. Use setting drawings, templates, diagrams, instructions, and directions furnished with items to be embedded.
   4. Install anchor bolts to elevations required for proper attachment to panelboards.
   5. Attach panelboard to the vertical finished or structural surface behind the panelboard.

C. Temporary Lifting Provisions: Remove temporary lifting eyes, channels, and brackets and temporary blocking of moving parts from panelboards.

D. Comply with mounting and anchoring requirements specified in Section 260548 "Vibration and Seismic Controls for Electrical Systems."

E. Mount top of trim **90 inches (2286 mm)** above finished floor unless otherwise indicated. Mounting height of Over Current Protective Devices shall be 6”7” above finished floor to the center of the grip of device operating handle unless a lower height is indicated or required by code.

F. Mount panelboard cabinet plumb and rigid without distortion of box. Mount recessed panelboards with fronts uniformly flush with wall finish and mating with back box.

G. Install overcurrent protective devices and controllers not already factory installed.
   1. Set field-adjustable, circuit-breaker trip ranges.

H. Install filler plates in unused spaces.

I. Stub four 1-inch (27-GRC) empty conduits from panelboard into accessible ceiling space or space designated to be ceiling space in the future. Stub four 1-inch (27-GRC) empty conduits into raised floor space or below slab not on grade.

J. Arrange conductors in gutters into groups and bundle and wrap with wire ties.

K. Comply with NECA 1.

3.3 IDENTIFICATION

A. Identify field-installed conductors, interconnecting wiring, and components; provide warning signs complying with Section 260553 "Identification for Electrical Systems."

B. Create a directory to indicate installed circuit loads incorporate Owner's final room designations. Obtain approval before installing. Use a computer or typewriter to create directory; handwritten directories are not acceptable.

C. Panelboard Nameplates: Label each panelboard with a nameplate complying with requirements for identification specified in Section 260553 "Identification for Electrical Systems."

D. Device Nameplates: Label each branch circuit device in distribution panelboards with a nameplate complying with requirements for identification specified in Section 260553 "Identification for Electrical Systems."

3.4 FIELD QUALITY CONTROL

A. Testing Agency: **Engage** a qualified testing agency to perform tests and inspections.

B. Manufacturer's Field Service: Engage a factory-authorized service representative to inspect, test, and adjust components, assemblies, and equipment installations, including connections.

C. Perform tests and inspections.
   1. Manufacturer's Field Service: Engage a factory-authorized service representative to inspect components, assemblies, and equipment installations, including connections, and to assist in testing.

D. Acceptance Testing Preparation:
   1. Test insulation resistance for each panelboard bus, component, connecting supply, feeder, and control circuit.
   2. Test continuity of each circuit.

E. Tests and Inspections:
   1. Perform each visual and mechanical inspection and electrical test stated in NETA Acceptance Testing Specification. Certify compliance with test parameters.
   2. Correct malfunctioning units on-site, where possible, and retest to demonstrate compliance; otherwise, replace with new units and retest.
   3. Perform the following infrared scan tests and inspections and prepare reports:
      a. Initial Infrared Scanning: After Substantial Completion, but not more than 60 days after Final Acceptance, perform an infrared scan of each panelboard. Remove front panels so joints and connections are accessible to portable scanner.
      b. Follow-up Infrared Scanning: Perform an additional follow-up infrared scan of each panelboard 11 months after date of Substantial Completion.
      c. Instruments and Equipment:
         1) Use an infrared scanning device designed to measure temperature or to detect significant deviations from normal values. Provide calibration record for device.

F. Panelboards will be considered defective if they do not pass tests and inspections.

G. Prepare test and inspection reports, including a certified report that identifies panelboards included and that describes scanning results. Include notation of deficiencies detected, remedial action taken, and observations after remedial action.

3.5 ADJUSTING

A. Adjust moving parts and operable component to function smoothly and lubricate as recommended by manufacturer.

B. Set field-adjustable circuit-breaker trip ranges.

C. Load Balancing: After Substantial Completion, but not more than 60 days after Final Acceptance, measure load balancing and make circuit changes.
   1. Measure as directed during period of normal system loading.
   2. Perform load-balancing circuit changes outside normal occupancy/working schedule of the facility and at time directed. Avoid disrupting critical 24-hour services such as fax machines and on-line data processing, computing, transmitting, and receiving equipment.
   3. After circuit changes, recheck loads during normal load period. Record all load readings before and after changes and submit test records.
   4. Tolerance: Difference exceeding 20 percent between phase loads, within a panelboard, is not acceptable. Rebalance and recheck as necessary to meet this minimum requirement.

3.6 PROTECTION

A. Temporary Heating: Apply temporary heat to maintain temperature according to manufacturer's written instructions.

END OF SECTION 262416

SECTION 262713 - ELECTRICITY METERING

PART 1 - GENERAL

1.1 RELATED DOCUMENTS

A. Drawings and general provisions of the Contract, including General and Supplementary Conditions and Division 01 Specification Sections, apply to this Section.

1.2 SUMMARY

A. Section includes equipment for electricity metering by utility company and electricity metering by Owner.

1.3 DEFINITIONS

A. KY Pulse: Term used by the metering industry to describe a method of measuring consumption of electricity that is based on a relay opening and closing in response to the rotation of the disk in the meter.

B. PC: Personal computer.

1.4 ACTION SUBMITTALS

A. Product Data: Manufacturer's technical data for each type of product indicated.

B. Shop Drawings: For electricity-metering equipment.
   1. Dimensioned plans and sections or elevation layouts.
   2. Wiring Diagrams: For power, signal, and control wiring. Identify terminals and wiring designations and color-codes to facilitate installation, operation, and maintenance. Indicate recommended types, wire sizes, and circuiting arrangements for field-installed wiring, and show circuit protection features.

C. Manufacturer Seismic Qualification Certification for Electricity-Metering Equipment: Submit certification that equipment components and their mounting and anchorage provisions have been designed to remain in place without separation of any parts or loosening of factory-made connections when subjected to the seismic forces and shall include the following:
   1. Basis for Certification: Indicate whether certification is based on actual test of assembled components or on calculations.
   2. Detailed description of equipment mounting and anchorage devices on which the certification is based and their installation requirements.

1.5 INFORMATIONAL SUBMITTALS

A. Field quality-control reports.

1.6 CLOSEOUT SUBMITTALS

A. Operation and Maintenance Data. In addition to items specified in Section 017823 "Operation and Maintenance Data," include the following:
   1. Application and operating software documentation.
   2. Software licenses.
   3. Software service agreement.
   4. Hard copies of manufacturer's operating specifications, design user's guides for software and hardware, and PDF files on CD-ROM of the hard-copy Submittal.

1.7 QUALITY ASSURANCE

A. Electrical Components, Devices, and Accessories: UL Listed and labeled as defined in NFPA 70 and marked for intended location and application.

B. Owner’s Meters in switchgear/switchboard/distribution board shall be installed by the manufacturer at the factory.

1.8 DELIVERY, STORAGE, AND HANDLING

A. Receive, store, and handle modular meter center according to NECA 400.

1.9 COORDINATION

A. Electrical Service Connections: Coordinate with utility companies and components they furnish as follows:
   1. Comply with requirements of utilities providing electrical power services.
   2. Coordinate installation and connection of utilities and services, including provision for electricity-metering components.

1.10 SOFTWARE SERVICE AGREEMENT

A. Technical Support: Beginning with Substantial Completion, provide software support for [**two**] years from the date of acceptance of the project by the owner.

B. Upgrade Service: Update software to latest version at Project completion. Install and program software upgrades that become available within [**two**] years from date of Substantial Completion. Upgrading software shall include operating system. Upgrade shall include new or revised licenses for use of software at no additional cost to the owner.
   1. Provide [**30**] days' notice to Owner to allow scheduling and access to system and to allow Owner to upgrade his computer equipment if necessary.

PART 2 - PRODUCTS

2.1 EQUIPMENT FOR ELECTRICITY METERING BY UTILITY COMPANY

A. Meters will be furnished by utility company.

B. Current-Transformer Cabinets: Comply with requirements of electrical-power utility company.

C. Meter Sockets: Comply with requirements of electrical-power utility company.

D. Meter Sockets: Steady-state and short-circuit current ratings shall meet indicated circuit ratings.

E. Modular Meter Center: Factory-coordinated assembly of a main service **disconnect device**, wireways, tenant meter socket modules, and tenant feeder circuit breakers arranged in adjacent vertical sections. Assembly shall be complete with interconnecting buses and other features as specified below.
   1. Manufacturers: Subject to compliance with requirements, **provide products by one of the following.**
      a. Square D; a brand of Schneider Electric
      b. Eaton Electrical Inc.; Cutler-Hammer Business Unit.
      c. General Electric Company; GE Consumer & Industrial - Electrical Distribution.
      d. Siemens Energy & Automation, Inc..
      e. Electrotech Industries
      f. E-Mon; a division of Hunt Power.
      ~~g.~~
   2. Comply with requirements of utility company for meter center.
      a. Comply with UL 67.
   3. Housing: NEMA 250, [**Type 3R**] enclosure.
   4. Minimum Short-Circuit Rating: **65,000** A symmetrical at rated voltage.
   5. Main Disconnect Device: Circuit breaker, series-combination rated for use with downstream feeder and branch circuit breakers.
   6. Main Disconnect Device: Fusible switch, series-combination rated by circuit-breaker manufacturer to protect downstream feeder and branch circuit breakers.
   7. Tenant Feeder Circuit Breakers: Series-combination-rated molded-case units, rated to protect circuit breakers in downstream tenant and to house load centers and panelboards that have 10,000-A interrupting capacity.
      a. Identification: Complying with requirements in Section 260553 "Identification for Electrical Systems" with legend identifying tenant's address.
      b. Physical Protection: Tamper resistant, with hasp for padlock.
   8. Meter Socket: Rating coordinated with indicated tenant feeder circuit rating.
   9. Surge Protection: For main disconnect device, comply with requirements in Section 264313 "Surge Protection for Low-Voltage Electrical Power Circuits."

F. Arc-Flash Warning Labels;
   1. Labels: Comply with requirements for "Arc-Flash Warning Labels" in Section 260573.19 "Arc-Flash Studies." Apply a 3-1/2-by-5-inch (76-by-127-mm) thermal transfer label of high-adhesion polyester for each work location included in the analysis.
   2. Labels: Comply with requirements for "Self-Adhesive Equipment Labels" and "Signs" in Section 260553 "Identification for Electrical Systems." Apply a 3-1/2-by-5-inch (76-by-

127-mm) thermal transfer label of high-adhesion polyester for each work location included in the analysis. Labels shall be machine printed, with no field-applied markings.

a. The label shall have an orange header with the wording, "WARNING, ARC-FLASH HAZARD," and shall include the following information taken directly from the arc-flash hazard analysis:
   1) Location designation.
   2) Nominal voltage.
   3) Flash protection boundary.
   4) Hazard risk category.
   5) Incident energy.
   6) Working distance.

3. Engineering report number, revision number, and issue date.

2.2 EQUIPMENT FOR ELECTRICITY METERING BY OWNER

A. Manufacturers: Subject to compliance with requirements, **provide products by one of the following**
   1. Square D; a brand of Schneider Electric
   2. Eaton Electrical Inc.; Cutler-Hammer Business Unit
   3. General Electric Company; GE Consumer & Industrial - Electrical Distribution
   4. Electrotech Industries
   5. E-Mon; a division of Hunt Power.

B. General Requirements for Owner's Meters:
   1. Comply with UL 1244.
   2. Meters used for billing shall have an accuracy of [**0.2**] percent of reading, complying with requirements in ANSI C12.20.
   3. Meters shall be certified by [California Type Evaluation Program as complying with [Title 4, California Code of Regulations, Article 2.2]
   4. Enclosure: NEMA 250, [**Type 3R**] minimum, with hasp for padlocking or sealing.
   5. Meters installed outdoor shall be in NEMA 4X stainless steel enclosure. Meter in enclosure shall be factory installed and assembled with strip heaters controlled by thermostat.
   6. Identification: Comply with requirements in Section 260553 "Identification for Electrical Systems."
   7. Memory Backup: Self-contained to maintain memory throughout power outages of 72 hours, minimum.
   8. Sensors: Current-sensing type, with current or voltage output, selected for optimum range and accuracy for meters indicated for this application.
      a. Type: **Split and solid** core.
   9. Current-Transformer Cabinet: Listed or recommended by metering equipment manufacturer for use with sensors indicated.
   10. Building Automation System (BAS) Interface: One digital KY pulse to a user-definable increment of energy measurement. Match signal to [**BAS**] input and arrange to convey the instantaneous, integrated, demand level measured by meter to provide data for processing and possible programmed demand control action by destination system.

C. Kilowatt-hour Meter: Electronic **three**-phase meters, measuring electricity used.

1. Voltage and Phase Configuration: Meter shall be designed for use on circuits with voltage rating and phase configuration indicated for its application.
2. Display: LCD with characters not less than 0.25 inch (6 mm) high, indicating accumulative kilowatt-hours and current kilowatt load. Retain accumulated kilowatt-hour in a nonvolatile memory, until reset.
3. Display: Digital electromechanical counter, indicating accumulative kilowatt-hours.

D. Kilowatt-hour/Demand Meter: Electronic **three** phase meters, measuring electricity use and demand. Demand shall be integrated over a [**15-minute**] interval.
1. Voltage and Phase Configuration: Meter shall be designed for use on circuits with voltage rating and phase configuration indicated for its application.
2. Display: LCD with characters not less than 0.25 inch (6 mm) high, indicating accumulative kilowatt-hours, [**current time and date,**]current demand, **and** historic peak demand**, and time and date of historic peak demand**. Retain accumulated kilowatt-hour and historic peak demand in a nonvolatile memory, until reset.

E. Data Transmission Cable: Transmit KY pulse data over Class 1 control-circuit conductors in raceway. Comply with Section 260523 "Control-Voltage Electrical Power Cables."

F. Software: PC based, a product of meter manufacturer, suitable for calculation of utility cost allocation and billing/ production per Colton Electrical Utility.

G. Accessories:
1. Fuses: Provide fuses to protect meters.
2. Shunting Devices: Provide shunting devices for maintenance of meters.

PART 3 - EXECUTION

3.1 INSTALLATION

A. Comply with equipment installation requirements in NECA 1.

B. Install meters furnished by utility company. Install raceways and equipment according to utility company's written requirements. Provide empty conduits for metering leads and extend grounding connections as required by utility company.

C. Install modular meter center according to NECA 400 switchboard installation requirements.

D. Install arc-flash labels as required by NFPA 70.

E. Wiring Method:
1. Comply with requirements in Section 260519 "Low-Voltage Electrical Power Conductors and Cables."
2. Install unshielded, twisted-pair cable for control and signal transmission conductors, complying with Section 271513 "Communications Copper Horizontal Cabling."
3. Minimum conduit size shall be 1/2 inch (13 mm).

3.2 IDENTIFICATION

A. Comply with requirements for identification specified in Section 260553 "Identification for Electrical Systems."
   1. Series Combination Warning Label: Self-adhesive type, with text as required by NFPA 70.
   2. Equipment Identification Labels: Adhesive film labels with clear protective overlay. For residential meters, provide an additional card holder suitable for printed, weather-resistant card with occupant's name.

3.3 FIELD QUALITY CONTROL

A. Perform tests and inspections.
   1. Manufacturer's Field Service: Engage a factory-authorized service representative to inspect components, assemblies, and equipment installations, including connections, and to assist in testing.

B. Tests and Inspections:
   1. Connect a load of known kilowatt rating, [**1.5**] kW minimum, to a circuit supplied by metered feeder.
   2. Turn off circuits supplied by metered feeder and secure them in off condition.
   3. Run test load continuously for eight hours minimum, or longer, to obtain a measurable meter indication. Use test-load placement and setting that ensures continuous, safe operation.
   4. Check and record meter reading at end of test period and compare with actual electricity used, based on test-load rating, duration of test, and sample measurements of supply voltage at test-load connection. Record test results. This shall be done in the presence of Owner’s Meter Shop Personnel. Coordinate through Owner's Representative.

C. Electricity metering will be considered defective if it does not pass tests and inspections.

D. Prepare test and inspection reports.

END OF SECTION 262713

SECTION 262726 - WIRING DEVICES

PART 1 - GENERAL

1.1 RELATED DOCUMENTS

A. Drawings and general provisions of the Contract, including General and Supplementary Conditions and Division 01 Specification Sections, apply to this Section.

1.2 SUMMARY

A. Section Includes:
1. Receptacles, receptacles with integral GFCI, and associated device plates.
2. USB receptacles.
3. SPD receptacles, 125 V, 20 A.
4. Hazardous (classified) location receptacles.
5. Twist-locking receptacles.
6. Isolated-ground receptacles.
7. Tamper-resistant receptacles.
8. Weather-resistant receptacles.
9. Snap switches and wall-box dimmers.
10. Solid-state fan speed controls.
11. Wall-switch and exterior occupancy sensors.
12. Communications outlets.
13. Toggle switches, 120/277 V,**20** A.
14. Decorator-style devices, **20** A.
15. Pendant cord-connector devices.
16. Cord and plug sets.
17. Floor service outlets, poke-through assemblies, service poles, and multioutlet assemblies.

1.3 DEFINITIONS

A. AFCI: Arc-fault circuit interrupter.

B. EMI: Electromagnetic interference.

C. GFCI: Ground-fault circuit interrupter.

D. Pigtail: Short lead used to connect a device to a branch-circuit conductor.

E. RFI: Radio-frequency interference.

F. SPD: Surge Protective Device.

G. UTP: Unshielded twisted pair.

1.4 ADMINISTRATIVE REQUIREMENTS

A. Coordination:
   1. Receptacles for Owner-Furnished Equipment: Match plug configurations.
   2. Cord and Plug Sets: Match equipment requirements.

1.5 ACTION SUBMITTALS

A. Product Data: For each type of product.

B. Shop Drawings: List of legends and description of materials and process used for premarking wall plates.

C. Samples: One for each type of device and wall plate specified, in each color specified.

1.6 INFORMATIONAL SUBMITTALS

A. Field quality-control reports.

1.7 CLOSEOUT SUBMITTALS

A. Operation and Maintenance Data: For wiring devices to include in all manufacturers' packing-label warnings and instruction manuals that include labeling conditions.

1.8 MAINTENANCE MATERIAL SUBMITTALS

A. Furnish extra materials that match products installed and that are packaged with protective covering for storage and identified with labels describing contents.
   1. Floor Service-Outlet Assemblies: One for every 10, but no fewer than one.
   2. Poke-Through, Fire-Rated Closure Plugs: One for every five floor service outlets installed, but no fewer than two.

1.9 QUALITY ASSURANCE

A. Source Limitations: Obtain each type of wiring device through one source from a single manufacturer. Switches, receptacles and cover plates shall be of the same manufacturer.

B. Comply with National Electrical Manufacturer’s Association (NEMA) standards. Furnish products listed and classified by Underwriter's Laboratories Inc. as suitable for purpose specified and shown.

C. Manufacturer shall have a minimum of ten (10) years experience in the production of wiring devices specified and shall have ISO 9001 and 9002 certifications.

PART 2 - PRODUCTS

2.1 MANUFACTURERS

A. Manufacturers' Names: Shortened versions (shown in parentheses) of the following manufacturers' names are used in other Part 2 articles:
   1. Hubbell Incorporated; Wiring Device-Kellems (Hubbell).
   2. Leviton Mfg. Company Inc. (Leviton).
   3. Pass & Seymour/Legrand (Pass & Seymour).

B. Source Limitations: Obtain each type of wiring device and associated wall plate from single source from single manufacturer.

2.2 GENERAL WIRING-DEVICE REQUIREMENTS

A. Wiring Devices, Components, and Accessories: UL Listed and labeled, and marked for intended location and application.

B. Comply with NFPA 70.

C. Devices that are manufactured for use with modular plug-in connectors may be substituted under the following conditions:
   1. Connectors shall comply with UL2459 and shall be made with stranding building wire.
   2. Devices shall comply with the requirements in this Section.

2.3 STRAIGHT-BLADE RECEPTACLES

A. Convenience Receptacles, 125V, 20A: Comply with NEMA WD1, NEMAWD6 Configuration 5-20R, UL498, and FSW-C-596.
   1. Products: Subject to compliance with requirements, provide one of the following manufacturers:
      a. Hubbell; HBL5361 (single), HBL5362 (duplex).
      b. Leviton; 5361 (single), 5362 (duplex).
      c. Pass & Seymour; 5361 (single), 5362 (duplex).
   2. Description: Grounded, industrial extra heavy duty specifications grade, back- and side-wired, single-piece grounding brass strap with integral ground, impact-resistant thermoplastic nylon cover and body, smooth face, ~~20A, 125V, duplex~~, with separate grounding screw and NEMA 5-20R plug configurations.

B. Isolated-Ground, Duplex Convenience Receptacles, 125V, 20A: Comply with NEMA WD 1, NEMA WD 6 Configuration5-20R, UL498, and FSW-C-596.
   1. Products: Subject to compliance with requirements, provide one of the following manufacturers:
      a. Hubbell; IG5362.
      b. Leviton; 5362-IG.
      c. Pass & Seymour; IG5362.

2. Description: Straight blade; equipment grounding contacts shall be connected only to the green grounding screw terminal of the device and with inherent electrical isolation from mounting strap. Isolation shall be integral to receptacle construction and not dependent on removable parts.

C. Tamper-Resistant Convenience Receptacles, 125 V, 20 A: Comply with NEMA WD 1, NEMA WD 6 Configuration 5-20R, UL 498 Supplement sd, and FS W-C-596.

D. Weather-Resistant Duplex Receptacle, 125 V, 20 A
1. Description: Two pole, three wire, and self-grounding. Integral shutters that operate only when a plug is inserted in the receptacle. Square face.
2. Configuration: NEMA WD 6, Configuration 5-20R.
3. Standards: Comply with UL 498.

E. Controlled Duplex Receptacles, 125 V, 20A
1. Description: Two pole, three wire and self-grounding.
2. Configuration: NEMA WD 6, Configuration 5-20R.
3. Standards: Comply with UL 498.
4. Marking: Shall have permanent marking per CEC 130.5 (d).
5. USB Receptacles: **Dual and quad**, USB Type A, 5 V dc, and 2.1 A per receptacle (minimum).
6. Standards: Comply with UL 1310 and USB 3.0 devices.

F. USB Charging Receptacles
1. Description: Single-piece, rivetless, nickel-plated, all-brass grounding system. Nickel-plated, brass mounting strap.
2. USB Receptacles: **Dual and quad**, USB Type A, 5 V dc, and 2.1 A per receptacle (minimum).
3. Standards: Comply with UL 1310 and USB 3.0 devices.

G. Tamper-Resistant Duplex and USB Charging Receptacles
1. Description: Single-piece, rivetless, nickel-plated, all-brass grounding system. Nickel-plated, brass mounting strap. Integral shutters that operate only when a plug is inserted in the line voltage receptacle.
2. Line Voltage Receptacles: Two pole, three wire, and self-grounding; NEMA WD 6, Configuration 5-20R.
3. USB Receptacles: Dual USB Type A, 5 V dc, and 2.1 A per receptacle (minimum).
4. Standards: Comply with UL 498, UL 1310, USB 3.0 devices, and FS W-C-596.
5. Marking: Listed and labeled as complying with NFPA 70, "Tamper-Resistant Receptacles" Article.

2.4 GFCI RECEPTACLES

A. General Description:
1. Straight blade, **feed** through type.
2. Comply with NEMA WD 1, NEMA WD 6, UL 498, UL 943 Class A, and FS W-C-596.
3. Include indicator light that shows when the GFCI has malfunctioned and no longer provides proper GFCI protection.
4. Include self test feature so that the outlet is automatically tested every fifteen minutes.

5. Outlets used in coastal environments shall be suitable for such applications and shall be properly protected against the ambient conditions.

B. Duplex GFCI Convenience Receptacles, 125 V, 20 A:
1. Products: Subject to compliance with requirements, provide one of the following manufacturers:
a. Hubbell; GFR5352L.
b. Pass & Seymour; 2095.
c. Leviton; 7590.

C. Tamper-Resistant GFCI Convenience Receptacles, 125 V, 20 A:
1. Products: Subject to compliance with requirements, provide one of the following manufacturers:
a. Hubbell; GFTR20.
b. Pass & Seymour; 2095TR.

2.5 SPD RECEPTACLES

A. General Description: Comply with NEMA WD 1, NEMA WD 6, UL 498, UL 1449, and FS W-C-596, with integral SPD in line to ground, line to neutral, and neutral to ground.
1. SPD Components: Multiple metal-oxide varistors; with a nominal clamp-level rating of 400 V and minimum single transient pulse energy dissipation of 240 J, according to IEEE C62.41.2 and IEEE C62.45.
2. Active SPD Indication: Visual and audible, with light visible in face of device to indicate device is "active" or "no longer in service."

B. Duplex SPD Convenience Receptacles:
1. Products: Subject to compliance with requirements, provide one of the following manufacturers:
a. Hubbell; HBL5362SA.
b. Leviton; 5380.
c. Pass & Seymour; 5362BLSP.
2. Description: Straight blade, 125 V, 20 A; NEMA WD 6 Configuration 5-20R.

C. Isolated-Ground, Duplex SPD Convenience Receptacles:
1. Products: Subject to compliance with requirements, provide one of the following manufacturers:
a. Hubbell; IG5362SA.
b. Leviton; 5380-IG.
c. Pass & Seymour; IG5362BLSP.
2. Description:
a. Straight blade, 125 V, 20 A; NEMA WD 6 Configuration 5-20R.
b. Equipment grounding contacts shall be connected only to the green grounding screw terminal of the device and with inherent electrical isolation from mounting strap. Isolation shall be integral to receptacle construction and not dependent on removable parts.

D. Isolated-Ground, Hospital-Grade, Duplex SPD Convenience Receptacles:

1. Products: Subject to compliance with requirements, provide one of the following manufacturers:
   a. Hubbell; IG8362SA.
   b. Leviton; 8380-IG.
   c. Pass & Seymour; IG8300BLSP.
2. Description:
   a. Straight blade, 125 V, 20 A; NEMA WD 6 Configuration 5-20R.
   b. Comply with UL 498 Supplement sd.
   c. Equipment grounding contacts shall be connected only to the green grounding screw terminal of the device and with inherent electrical isolation from mounting strap. Isolation shall be integral to receptacle construction and not dependent on removable parts.

2.6 HAZARDOUS (CLASSIFIED) LOCATION RECEPTACLES

A. Wiring Devices for Hazardous (Classified) Locations: Comply with NEMA FB 11 and UL 1010.
   1. Products: Subject to compliance with requirements, provide one of the following manufacturers:
      a. Cooper Crouse-Hinds.
      b. EGS/Appleton Electric.
      c. Killark; Division of Hubbell Inc.

2.7 TWIST-LOCKING RECEPTACLES

A. Single Convenience Receptacles, 125 V, 20 A: Comply with NEMA WD 1, NEMA WD 6 Configuration L5-20R, and UL 498.
   1. Products: Subject to compliance with requirements, provide one of the following manufacturers:
      a. Hubbell; HBL2310.
      b. Leviton; 2310.
      c. Pass & Seymour; L520-R.

B. Isolated-Ground, Single Convenience Receptacles, 125 V, 20 A:
   1. Products: Subject to compliance with requirements, provide one of the following manufacturers:
      a. Hubbell; IG2310.
      b. Leviton; 2310-IG.
      c. Pass & Seymour; IG4700.
   2. Description:
      a. Comply with NEMA WD 1, NEMA WD 6 Configuration L5-20R, and UL 498.
      b. Equipment grounding contacts shall be connected only to the green grounding screw terminal of the device and with inherent electrical isolation from mounting strap. Isolation shall be integral to receptacle construction and not dependent on removable parts.

2.8 PENDANT CORD-CONNECTOR DEVICES

A. Description:
   1. Matching, locking-type plug and receptacle body connector.
   2. NEMA WD 6 Configurations L5-20P and L5-20R, heavy-duty grade, and FS W-C-596.
   3. Body: Nylon, with screw-open, cable-gripping jaws and provision for attaching external cable grip.
   4. External Cable Grip: Woven wire-mesh type made of high-strength, galvanized-steel wire strand, matched to cable diameter, and with attachment provision designed for corresponding connector.

2.9 CORD AND PLUG SETS

A. Description:
   1. Match voltage and current ratings and number of conductors to requirements of equipment being connected.
   2. Cord: Rubber-insulated, stranded-copper conductors, with Type SOW-A jacket; with green-insulated grounding conductor and ampacity of at least 130 percent of the equipment rating.
   3. Plug: Nylon body and integral cable-clamping jaws. Match cord and receptacle type for connection.

2.10 TOGGLE SWITCHES

A. Comply with NEMA WD 1, UL 20, and FS W-S-896.

B. Switches, 120/277 V, 20 A:
   1. Products: Subject to compliance with requirements, provide one of the following manufacturers:
      a. Single Pole:
         1) Hubbell; HBL1221.
         2) Leviton; 1221-2.
         3) Pass & Seymour; CSB20AC1.
      b. Two Pole:
         1)
         2) Hubbell; HBL1222.
         3) Leviton; 1222-2.
         4) Pass & Seymour; CSB20AC2.
      c. Three Way:
         1) Hubbell; HBL1223.
         2) Leviton; 1223-2.
         3) Pass & Seymour; CSB20AC3.
      d. Four Way:
         1) Hubbell; HBL1224.
         2) Leviton; 1224-2.

3) Pass & Seymour; CSB20AC4.

C. Pilot-Light Switches, 20 A:
1. Products: Subject to compliance with requirements, provide one of the following manufacturers:
a. Hubbell; HBL1201PL for 120 and 277 V.
b. Leviton; 1221-LH1.
c. Pass & Seymour; PS20AC1RPL for 120 V, PS20AC1RPL7 for 277 V.
2. Description: Single pole, with neon-lighted handle, illuminated when switch is "off."

D. Key-Operated Switches, 120/277 V, 20 A:
1. Products: Subject to compliance with requirements, provide one of the following manufacturers:
a. Hubbell; HBL1221L.
b. Leviton; 1221-2L.
c. Pass & Seymour; PS20AC1-L.
2. Description: Single pole, with factory-supplied key in lieu of switch handle.

E. Single-Pole, Double-Throw, Momentary-Contact, Center-off Switches: 120/277 V, 20 A; for use with mechanically held lighting contactors.
1. Products: Subject to compliance with requirements, provide one of the following manufacturers:
a. Hubbell; HBL2057.
b. Leviton; 1257.
c. Pass & Seymour; 1251.

F. Key-Operated, Single-Pole, Double-Throw, Momentary-Contact, Center-off Switches: 120/277 V, 20 A; for use with mechanically held lighting contactors, with factory-supplied key in lieu of switch handle.
1. Products: Subject to compliance with requirements, provide one of the following manufacturers:
a. Hubbell; HBL2057L.
b. Leviton; 1257L.
c. Pass & Seymour; 1251L.

G. Antimicrobial, Double-Pole Switches, 120/277 V, 20 A
1. Description: Contact surfaces treated with a coating that kills 99.9 percent of certain common bacteria within two hours when regularly and properly cleaned.
a. Standards: Comply with UL 20 and FS W-S-896.

H. Antimicrobial, Three-Way Switches, 120/277 V, 20 A
1. Description: Contact surfaces treated with a coating that kills 99.9 percent of certain common bacteria within two hours when regularly and properly cleaned.
a. Standards: Comply with UL 20 and FS W-S-896.

2.11 DECORATOR-STYLE DEVICES

A. Convenience Receptacles: Square face, 125 V, 20 A; comply with NEMA WD 1, NEMA WD 6 Configuration 5-20R, and UL 498.

1. Products: Subject to compliance with requirements, provide one of the following manufacturers:
   a. Hubbell; DR20.
   b. Leviton; 16252.
   c. Pass & Seymour; 26252.

B. Tamper-Resistant Convenience Receptacles: Square face, 125 V, 20 A; comply with NEMA WD 1, NEMA WD 6 Configuration 5-20R, and UL 498.
   1. Products: Subject to compliance with requirements, provide one of the following manufacturers:
      a. Hubbell; DR20TR.
      b. Pass & Seymour; TR26252.
   2. Description: Labeled to comply with NFPA 70, "Receptacles, Cord Connectors, and Attachment Plugs (Caps)" Article, "Tamper-Resistant Receptacles in Dwelling Units" Section.

C. Tamper-Resistant and Weather-Resistant Convenience Receptacles: Square face, 125 V, 20 A; comply with NEMA WD 1, NEMA WD 6 Configuration 5-20R, and UL 498.
   1. Products: Subject to compliance with requirements, provide one of the following manufacturers:
      a. Hubbell; DR20TR.
      b. LevitonTRW20.
      c. Pass & Seymour; TRW26252.
   2. Description: Labeled to comply with NFPA 70, "Receptacles, Cord Connectors, and Attachment Plugs (Caps)" Article, "Tamper-Resistant Receptacles in Dwelling Units" Section, when installed in wet and damp locations.

D. GFCI, **Feed**-Through Type, Convenience Receptacles: Square face, 125 V, 20 A; comply with NEMA WD 1, NEMA WD 6 Configuration 5-20R, UL 498, and UL 943 Class A.
   1. Products: Subject to compliance with requirements, provide one of the following manufacturers:
      a. Hubbell; GF20LA.
      b. Leviton; 8599.
      c. Pass & Seymour; 2094.

E. GFCI, Tamper-Resistant and Weather-Resistant Convenience Receptacles: Square face, 125 V, 20 A; comply with NEMA WD 1, NEMA WD 6 Configuration 5-20R, UL 498, and UL 943 Class A.
   1. Products: Subject to compliance with requirements, provide one of the following manufacturers:
      a. Hubbell; GFTR20.
      b. Pass & Seymour; 2094TRWR.

   2. Description: Labeled to comply with NFPA 70, "Receptacles, Cord Connectors, and Attachment Plugs (Caps)" Article, "Tamper-Resistant Receptacles in Dwelling Units" Section.

F. Toggle Switches, Square Face, 120/277 V, 20 A: Comply with NEMA WD 1, UL 20, and FS W-S-896.

1. Products: Subject to compliance with requirements, provide one of the following manufacturers:
   a. Hubbell; DS120 (single pole), DS320 (three way).
   b. Leviton; 5621-2 (single pole), 5623-2 (three way).
   c. Pass & Seymour; 2621 (single pole), 2623 (three way).

G. Lighted Toggle Switches, Square Face, 120 V, 20 A: Comply with NEMA WD 1 and UL 20.
   1. Products: Subject to compliance with requirements, provide one of the following manufacturers:
      a. Cooper; 7631 (single pole), 7633 (three way).
      b. Hubbell; DS120IL (single pole), DS320 (three way).
      c. Leviton; 5631-2 (single pole), 5633-2 (three way).
      d. Pass & Seymour; 2625 (single pole), 2626 (three way).
   2. Description: With neon-lighted handle, illuminated when switch is "off."

2.12 RESIDENTIAL DEVICES

A. Residential-Grade, Tamper-Resistant Convenience Receptacles, 125 V, 20 A: Comply with NEMA WD 1, NEMA WD 6 Configuration 5-20R, and UL 498.
   1. Products: Subject to compliance with requirements, provide one of the following manufacturers:
      a. Cooper; TR270.
      b. Hubbell; RR205TR.
      c. Leviton; T5320.
      d. Pass & Seymour; TR62.
   2. Description: Labeled to comply with NFPA 70, "Receptacles, Cord Connectors, and Attachment Plugs (Caps)" Article, "Tamper-Resistant Receptacles in Dwelling Units" Section.

B. Weather-Resistant and Tamper-Resistant Convenience Receptacles, 125 V, 20 A: Comply with NEMA WD 1, NEMA WD 6 Configuration 5-20R, and UL 498.
   1. Products: Subject to compliance with requirements, provide one of the following manufacturers:
      a. Cooper; TWR270.
      b. Hubbell; RR205WRTR.
      c. Leviton; TWR20.
      d. Pass & Seymour; 3232TRWR.
   2. Description: Labeled to comply with NFPA 70, "Receptacles, Cord Connectors, and Attachment Plugs (Caps)" Article, "Tamper-Resistant Receptacles in Dwelling Units" Section, when installed in wet and damp locations.

C. Fan Speed Controls:
   1. Modular, 120-V, full-wave, solid-state units with integral, quiet on-off switches and audible frequency and EMI/RFI filters.
   2. Comply with UL 1917.
   3. Continuously adjustable **toggle switch** , **1.5 A**.
   4. Three-speed adjustable **rotary knob**, 1.5 A.

D. Telephone Outlet:

1. Products: Subject to compliance with requirements, provide one of the following manufacturers:
   a. Cooper; 3560-6.
   b. Leviton; 40649.
2. Description: Single RJ-45 jack for terminating 100-ohm, balanced, four-pair UTP; TIA/EIA-568-B.1; complying with [**Category 5e**] <**Insert category**>. Comply with UL 1863.

E. Combination TV and Telephone Outlet:
1. Products: Subject to compliance with requirements, provide one of the following manufacturers:
   a. Cooper; 3562.
   b. Leviton; 40159.
2. Description: Single RJ-45 jack for 100-ohm, balanced, four-pair UTP; TIA/EIA-568-B.1; complying with [**Category 5e**] <**Insert category**>. Comply with UL 1863.

F. Control: Continuously adjustable **slider** with single-pole or three-way switching. Comply with UL 1472.

G. LED Lamp Dimmers Switches: Modular, compatible with LED lamps.

2.13 WALL PLATES

A. Single and combination types shall match corresponding wiring devices.
1. Plate-Securing Screws: Metal with head color to match plate finish.
2. Material for Finished Spaces: 0.035-inch- (1-mm-) thick, satin-finished, Type 302 stainless steel.
3. Material for Unfinished Spaces: Galvanized steel.
4. Material for Damp Locations: Cast aluminum with spring-loaded lift cover, and listed and labeled for use in wet and damp locations.

B. Wet-Location, Weatherproof Cover Plates: NEMA 250, complying with Type 3R, weather-resistant, die-cast aluminum with lockable cover.

2.14 FLOOR SERVICE FITTINGS

A. Service fittings in "Type" Paragraph below are available for voice and data communication cabling as well as for power.

B. Type: Modular, flush-type, dual-service units suitable for wiring method used.

C. Compartments: Barrier separates power from voice and data communication cabling.

D. Service Plate: Rectangular or round, solid brass with satin finish.

E. Power Receptacle: NEMA WD 6 Configuration 5-20R, gray finish, unless otherwise indicated.

F. Voice and Data Communication Outlet: Two modular, keyed, color-coded, RJ-45 jacks for UTP cable complying with requirements in Section 271513 "Copper Horizontal Cabling."

2.15 POKE-THROUGH ASSEMBLIES

A. Products: Subject to compliance with requirements, provide one of the following manufacturers:
   1. Hubbell Incorporated; Wiring Device-Kellems.
   2. Pass & Seymour/Legrand.
   3. Square D/Schneider Electric.
   4. Thomas & Betts Corporation.
   5. Wiremold/Legrand.

B. Description:
   1. Factory-fabricated and -wired assembly of below-floor junction box with multichanneled, through-floor raceway/firestop unit and detachable matching floor service-outlet assembly.
   2. Comply with UL 514 scrub water exclusion requirements.
   3. Service-Outlet Assembly: [Pedestal type with services indicated] [Flush type with two simplex receptacles and space for two RJ-45 jacks] [Flush type with four simplex receptacles and space for four RJ-45 jacks] complying with requirements in Section 271500 "Communications Horizontal Cabling."
   4. Size: Selected to fit nominal 8 inch cored holes in floor and matched to floor thickness.
   5. Fire Rating: Unit is listed and labeled for fire rating of floor-ceiling assembly.
   6. Closure Plug: Arranged to close unused cored openings and reestablish fire rating of floor.
   7. Wiring Raceways and Compartments: For a minimum of four No. 12 AWG conductors and a minimum of four, four-pair cables that comply with requirements in Section 271500 "Communications Horizontal Cabling."

2.16 FINISHES

A. Device Color:
   1. Wiring Devices Connected to Normal Power System: As selected by Architect unless otherwise indicated or required by NFPA 70 or device listing.
   2. Wiring Devices Connected to Emergency Power System: Red.
   3. SPD Devices: Blue.
   4. Isolated-Ground Receptacles: As specified above, with orange triangle on face.

B. Wall Plate Color: For plastic covers, match device color.

PART 3 - EXECUTION

3.1 INSTALLATION

A. Comply with NECA 1, including mounting heights listed in that standard, unless otherwise indicated.

B. Coordination with Other Trades:
   1. Protect installed devices and their boxes. Do not place wall finish materials over device boxes and do not cut holes for boxes with routers that are guided by riding against outside of boxes.
   2. Keep outlet boxes free of plaster, drywall joint compound, mortar, cement, concrete, dust, paint, and other material that may contaminate the raceway system, conductors, and cables.
   3. Install device boxes in brick or block walls so that the cover plate does not cross a joint unless the joint is troweled flush with the face of the wall.
   4. Install wiring devices after all wall preparation, including painting, is complete.

C. Conductors:
   1. Do not strip insulation from conductors until right before they are spliced or terminated on devices.
   2. Strip insulation evenly around the conductor using tools designed for the purpose. Avoid scoring or nicking of solid wire or cutting strands from stranded wire.
   3. The length of free conductors at outlets for devices shall meet provisions of NFPA 70, Article 300, without pigtails.
   4. Existing Conductors:
      a. Cut back and pigtail, or replace all damaged conductors.
      b. Straighten conductors that remain and remove corrosion and foreign matter.
      c. Pigtailing existing conductors is permitted, provided the outlet box is large enough.

D. Device Installation:
   1. Replace devices that have been in temporary use during construction and that were installed before building finishing operations were complete.
   2. Keep each wiring device in its package or otherwise protected until it is time to connect conductors.
   3. Do not remove surface protection, such as plastic film and smudge covers, until the last possible moment.
   4. Connect devices to branch circuits using pigtails that are not less than 6 inches (152 mm) in length.
   5. When there is a choice, use side wiring with binding-head screw terminals. Wrap solid conductor tightly clockwise, two-thirds to three-fourths of the way around terminal screw.
   6. Use a torque screwdriver when a torque is recommended or required by manufacturer.
   7. When conductors larger than No. 12 AWG are installed on 20-A circuits, splice No. 12 AWG pigtails for device connections.
   8. Tighten unused terminal screws on the device.
   9. When mounting into metal boxes, remove the fiber or plastic washers used to hold device-mounting screws in yokes, allowing metal-to-metal contact.

E. Receptacle Orientation:
   1. Install ground pin of vertically mounted receptacles **up**, and on horizontally mounted receptacles to the **right**.
   2. Install hospital-grade receptacles in patient-care areas with the ground pin ~~or neutral blade~~ at the top.

F. Device Plates: Do not use oversized or extra-deep plates. Repair wall finishes and remount outlet boxes when standard device plates do not fit flush or do not cover rough wall opening.

G. Arrangement of Devices: Unless otherwise indicated, mount flush, with long dimension vertical and with grounding terminal of receptacles on top. Group adjacent switches under single, multigang wall plates.

H. Adjust locations of floor service outlets and service poles to suit arrangement of partitions and furnishings.

3.2 GFCI RECEPTACLES

A. Install non-feed-through-type GFCI receptacles where protection of downstream receptacles is not required.

3.3 IDENTIFICATION

A. Comply with Section 260553 "Identification for Electrical Systems."

B. Identify each receptacle with panelboard identification and circuit number. Use hot, stamped, or engraved machine printing with **black**-filled lettering on face of plate, and durable wire markers or tags inside outlet boxes.

C. Essential Electrical System: Mark receptacles supplied from the essential electrical system to allow easy identification using a self-adhesive label.

3.4 FIELD QUALITY CONTROL

A. Perform the following tests and inspections
   1. In healthcare facilities, prepare reports that comply with recommendations in NFPA 99.
   2. Test Instruments: Use instruments that comply with UL 1436.
   3. Test Instrument for Convenience Receptacles: Digital wiring analyzer with digital readout or illuminated digital-display indicators of measurement.

B. Tests for Convenience Receptacles:
   1. Line Voltage: Acceptable range is 105 to 132 V.
   2. Percent Voltage Drop under 20-A Load: A value of 6 percent or higher is unacceptable.
   3. Ground Impedance: Values of up to 2 ohms are acceptable.
   4. GFCI Trip: Test for tripping values specified in UL 1436 and UL 943.
   5. Using the test plug, verify that the device and its outlet box are securely mounted.

6. Tests shall be diagnostic, indicating damaged conductors, high resistance at the circuit breaker, poor connections, inadequate fault current path, defective devices, or similar problems. Correct circuit conditions, remove malfunctioning units and replace with new ones, and retest as specified above.

C. Test straight-blade for the retention force of the grounding blade according to NFPA 99. Retention force shall be not less than 4 oz. (115 g).

D. Wiring device will be considered defective if it does not pass tests and inspections.

E. Prepare test and inspection reports. Submit reports within two (2) weeks of completion of tests.

END OF SECTION 262726

SECTION 262813 - FUSES

PART 1 - GENERAL

1.1 RELATED DOCUMENTS

A. Drawings and general provisions of the Contract, including General and Supplementary Conditions and Division 01 Specification Sections, apply to this Section.

1.2 SUMMARY

A. Section Includes:
   1. Cartridge fuses rated 600-V ac and less for use in enclosed switches.
   2. Spare-fuse cabinets.

1.3 ACTION SUBMITTALS

A. Product Data: For each type of product indicated. Include construction details, material, dimensions, descriptions of individual components, and finishes for spare-fuse cabinets. Include the following for each fuse type indicated:
   1. Ambient Temperature Adjustment Information: If ratings of fuses have been adjusted to accommodate ambient temperatures, provide list of fuses with adjusted ratings.
      a. For each fuse having adjusted ratings, include location of fuse, original fuse rating, local ambient temperature, and adjusted fuse rating.
      b. Provide manufacturer's technical data on which ambient temperature adjustment calculations are based.
   2. Dimensions and manufacturer's technical data on features, performance, electrical characteristics, and ratings.
   3. Current-limitation curves for fuses with current-limiting characteristics.
   4. Time-current coordination curves (average melt) and current-limitation curves (instantaneous peak let-through current) for each type and rating of fuse.
   5. Coordination charts and tables and related data.
   6. Fuse sizes for elevator feeders and elevator disconnect switches.

1.4 CLOSEOUT SUBMITTALS

A. Operation and Maintenance Data: For fuses to include in emergency, operation, and maintenance manuals. In addition to items specified in Section 017823 "Operation and Maintenance Data," include the following:
   1. Ambient temperature adjustment information.
   2. Current-limitation curves for fuses with current-limiting characteristics.
   3. Time-current coordination curves (average melt) and current-limitation curves (instantaneous peak let-through current) for each type and rating of fuse.
   4. Coordination charts and tables and related data.

1.5 MAINTENANCE MATERIAL SUBMITTALS

A. Furnish extra materials that match products installed and that are packaged with protective covering for storage and identified with labels describing contents.
   1. Fuses: Equal to **10** percent of quantity installed for each size and type, but no fewer than **two** of each size and type.

1.6 QUALITY ASSURANCE

A. Source Limitations: Obtain fuses, for use within a specific product or circuit, from single source from single manufacturer.

B. Electrical Components, Devices, and Accessories: Listed and labeled as defined in NFPA 70, by a qualified testing agency, and marked for intended location and application.

C. Comply with NEMA FU 1 for cartridge fuses.

D. Comply with NFPA 70.

E. Comply with UL 248-11 for plug fuses.

1.7 PROJECT CONDITIONS

A. Where ambient temperature to which fuses are directly exposed is less than 40 deg F (5 deg C) or more than 100 deg F (38 deg C), apply manufacturer's ambient temperature adjustment factors to fuse ratings.

1.8 COORDINATION

A. Coordinate fuse ratings with utilization equipment nameplate limitations of maximum fuse size and with system short-circuit current levels.

PART 2 - PRODUCTS

2.1 MANUFACTURERS

A. Manufacturers: Subject to compliance with requirements, provide products by one of the following:
   1. Cooper Bussmann, Inc.
   2. Edison Fuse, Inc.
   3. Ferraz Shawmut, Inc.
   4. Littelfuse, Inc.

2.2 CARTRIDGE FUSES

A. Characteristics: NEMA FU 1, nonrenewable cartridge fuses with voltage ratings consistent with circuit voltages.

2.3 PLUG FUSES

A. Characteristics: UL 248-11, nonrenewable plug fuses; 125-V ac.

2.4 PLUG-FUSE ADAPTERS

A. Characteristics: Adapters for using Type S, rejection-base plug fuses in Edison-base fuseholders or sockets; ampere ratings matching fuse ratings; irremovable once installed.

2.5 SPARE-FUSE CABINET

A. Characteristics: Wall-mounted steel unit with full-length, recessed piano-hinged door and key-coded cam lock and pull.
   1. Size: Adequate for storage of spare fuses specified with 15 percent spare capacity minimum.
   2. Finish: Gray, baked enamel.
   3. Identification: "SPARE FUSES" in 1-1/2-inch- (38-mm-) high letters on exterior of door.
   4. Fuse Pullers: For each size of fuse, where applicable and available, from fuse manufacturer.

PART 3 - EXECUTION

3.1 EXAMINATION

A. Examine fuses before installation. Reject fuses that are moisture damaged or physically damaged.

B. Examine holders to receive fuses for compliance with installation tolerances and other conditions affecting performance, such as rejection features.

C. Examine utilization equipment nameplates and installation instructions. Install fuses of sizes and with characteristics appropriate for each piece of equipment.

D. Evaluate ambient temperatures to determine if fuse rating adjustment factors must be applied to fuse ratings.

E. Proceed with installation only after unsatisfactory conditions have been corrected.

3.2 FUSE APPLICATIONS

A. Cartridge Fuses:
   1. Service Entrance: Class L, fast acting.
   2. Feeders: Class L, fast acting.
   3. Motor Branch Circuits: Class RK1, time delay.
   4. Other Branch Circuits: Class RK1, time delay.
   5. Control Circuits: Class CC, fast acting.

3.3 INSTALLATION

A. Install fuses in fusible devices. Arrange fuses so rating information is readable without removing fuse.

B. Install plug-fuse adapters in Edison-base fuseholders and sockets. Ensure that adapters are irremovable once installed.

C. Install spare-fuse cabinet(s).

3.4 IDENTIFICATION

A. Install labels complying with requirements for identification specified in Section 260553 "Identification for Electrical Systems" and indicating fuse replacement information on inside door of each fused switch and adjacent to each fuse block, socket, and holder.

END OF SECTION 262813

SECTION 262816 - ENCLOSED SWITCHES AND CIRCUIT BREAKERS

PART 1 - GENERAL

1.1 RELATED DOCUMENTS

A. Drawings and general provisions of the Contract, including General and Supplementary Conditions and other Division 01 Specification Sections, apply to this Section.

1.2 SUMMARY

A. Section Includes:
1. Fusible switches.
2. Nonfusible switches.
3. Receptacle switches.
4. Shunt trip switches.
5. Molded-case circuit breakers (MCCBs).
6. Molded-case switches.
7. Enclosures.

1.3 DEFINITIONS

A. NC: Normally closed.

B. NO: Normally open.

C. SPDT: Single pole, double throw.

1.4 PERFORMANCE REQUIREMENTS

A. Seismic Performance: Enclosed switches and circuit breakers shall withstand the effects of earthquake motions determined according to ASCE/SEI 7.
1. The term "withstand" means "the unit will remain in place without separation of any parts from the device when subjected to the seismic forces specified and the unit will be fully operational after the seismic event."

1.5 ACTION SUBMITTALS

A. Product Data: For each type of enclosed switch, circuit breaker, accessory, and component indicated. Include dimensioned elevations, sections, weights, and manufacturers' technical data on features, performance, electrical characteristics, ratings, accessories, and finishes.
1. Enclosure types and details for types other than NEMA 250, Type 1.
2. Current and voltage ratings.

3. Short-circuit current ratings (interrupting and withstand, as appropriate).
4. Include evidence of NRTL listing for series rating of installed devices.
5. Detail features, characteristics, ratings, and factory settings of individual overcurrent protective devices, accessories, and auxiliary components.
6. Include time-current coordination curves (average melt) for each type and rating of overcurrent protective device; include selectable ranges for each type of overcurrent protective device.

B. Shop Drawings: For enclosed switches and circuit breakers. Include plans, elevations, sections, details, and attachments to other work.
   1. Wiring Diagrams: For power, signal, and control wiring.

1.6 INFORMATIONAL SUBMITTALS

A. Qualification Data: For qualified testing agency.

B. Seismic Qualification Certificates: For enclosed switches and circuit breakers, accessories, and components, from manufacturer.
   1. Basis for Certification: Indicate whether withstand certification is based on actual test of assembled components or on calculation.
   2. Dimensioned Outline Drawings of Equipment Unit: Identify center of gravity and locate and describe mounting and anchorage provisions.
   3. Detailed description of equipment anchorage devices on which the certification is based and their installation requirements.

C. Field quality-control reports.
   1. Test procedures used.
   2. Test results that comply with requirements.
   3. Results of failed tests and corrective action taken to achieve test results that comply with requirements.

D. Manufacturer's field service report.

1.7 CLOSEOUT SUBMITTALS

A. Operation and Maintenance Data: For enclosed switches and circuit breakers to include in emergency, operation, and maintenance manuals. In addition to items specified in Section 017823 "Operation and Maintenance Data," include the following:
   1. Manufacturer's written instructions for testing and adjusting enclosed switches and circuit breakers.
   2. Time-current coordination curves (average melt) for each type and rating of overcurrent protective device; include selectable ranges for each type of overcurrent protective device.

1.8 MAINTENANCE MATERIAL SUBMITTALS

A. Furnish extra materials that match products installed and that are packaged with protective covering for storage and identified with labels describing contents.
   1. Fuses: Equal to 10 percent of quantity installed for each size and type, but no fewer than three of each size and type.
   2. Fuse Pullers: two for each size and type.

1.9 QUALITY ASSURANCE

A. Testing Agency Qualifications: Member company of NETA or an NRTL.
   1. Testing Agency's Field Supervisor: Currently certified by NETA to supervise on-site testing.

B. Source Limitations: Obtain enclosed switches and circuit breakers, overcurrent protective devices, components, and accessories, within same product category, from single source from single manufacturer.

C. Product Selection for Restricted Space: Drawings indicate maximum dimensions for enclosed switches and circuit breakers, including clearances between enclosures, and adjacent surfaces and other items. Comply with indicated maximum dimensions.

D. Electrical Components, Devices, and Accessories: Listed and labeled as defined in NFPA 70, by a qualified testing agency, and marked for intended location and application.

E. Comply with NFPA 70.

1.10 PROJECT CONDITIONS

A. Environmental Limitations: Rate equipment for continuous operation under the following conditions unless otherwise indicated:
   1. Ambient Temperature: Not less than minus 22 deg F and not exceeding 104 deg F.
   2. Altitude: Not exceeding 6600 feet.

1.11 COORDINATION

A. Coordinate layout and installation of switches, circuit breakers, and components with equipment served and adjacent surfaces. Maintain required workspace clearances and required clearances for equipment access doors and panels.

PART 2 - PRODUCTS

2.1 FUSIBLE SWITCHES

A. Manufacturers: Subject to compliance with requirements, provide products by one of the following:

1. Eaton Electrical Inc.; Cutler-Hammer Business Unit.
2. General Electric Company; GE Consumer & Industrial - Electrical Distribution.
3. Siemens Energy & Automation, Inc.
4. Square D; a brand of Schneider Electric.

B. Type HD, Heavy Duty, Single Throw, 600-V ac, 1200 A and Smaller: UL 98 and NEMA KS 1, horsepower rated, with clips or bolt pads to accommodate indicated fuses, lockable handle with capability to accept three padlocks, and interlocked with cover in closed position.

C. Type HD, Heavy Duty, Double Throw, 600-V ac, 1200 A and Smaller: UL 98 and NEMA KS 1, horsepower rated, with clips or bolt pads to accommodate indicated fuses, lockable handle with capability to accept three padlocks, and interlocked with cover in closed position.

D. Accessories:
1. Retain subparagraphs below with applicable switch paragraphs above. Verify that accessories specified are available and applicable to switch types and ratings in this article.
2. Equipment Ground Kit: Internally mounted and labeled for copper and aluminum ground conductors.
3. Neutral Kit: Internally mounted; insulated, capable of being grounded and bonded; labeled for copper and aluminum neutral conductors.
4. Isolated Ground Kit: Internally mounted; insulated, capable of being grounded and bonded; labeled for copper and aluminum neutral conductors.
5. Class R Fuse Kit: Provides rejection of other fuse types when Class R fuses are specified.
6. Auxiliary Contact Kit: One NO/NC (Form "C") auxiliary contact(s), arranged to activate before switch blades open.
7. Hookstick Handle: Allows use of a hookstick to operate the handle.
8. See Editing Instruction No. 7 in the Evaluations for guidance on using mechanical versus compression lugs. Some size lugs (and lugs in other than NEMA 250, Type 1 and NEMA 250, Type 3R enclosures) are frequently available only for copper conductors; coordinate with manufacturers' literature.
9. Lugs: Mechanical type, suitable for number, size, and conductor material.
10. Service-Rated Switches: Labeled for use as service equipment.

2.2 NONFUSIBLE SWITCHES

A. Manufacturers: Subject to compliance with requirements, provide products by one of the following:
1. Eaton Electrical Inc.; Cutler-Hammer Business Unit.
2. General Electric Company; GE Consumer & Industrial - Electrical Distribution.
3. Siemens Energy & Automation, Inc.
4. Square D; a brand of Schneider Electric.

A. Manufacturers: Subject to compliance with requirements, provide products by one of the following:

1. Retain option in first paragraph below if manufacturer's name and model number are indicated in schedules or plans on Drawings; delete option and insert manufacturer's name and model number if not included on Drawings.

2. Eaton Electrical Inc.; Cutler-Hammer Business Unit.
3. General Electric Company; GE Consumer & Industrial - Electrical Distribution.
4. Siemens Energy & Automation, Inc.
5. Square D; a brand of Schneider Electric.

B. Type HD, Heavy Duty, Single Throw, 600-V ac, 1200 A and Smaller: UL 98 and NEMA KS 1, horsepower rated, lockable handle with capability to accept three padlocks, and interlocked with cover in closed position.

C. Type HD, Heavy Duty, Double Throw, 600-V ac, 1200 A and Smaller: UL 98 and NEMA KS 1, horsepower rated, lockable handle with capability to accept three padlocks, and interlocked with cover in closed position.

D. Accessories:

1. Equipment Ground Kit: Internally mounted and labeled for copper and aluminum ground conductors.
2. Neutral Kit: Internally mounted; insulated, capable of being grounded and bonded; labeled for copper and aluminum neutral conductors.
3. Isolated Ground Kit: Internally mounted; insulated, capable of being grounded and bonded; labeled for copper and aluminum neutral conductors.
4. Auxiliary Contact Kit: One NO/NC (Form "C") auxiliary contact(s), arranged to activate before switch blades open.
5. Hookstick Handle: Allows use of a hookstick to operate the handle.
6. Lugs: Mechanical type, suitable for number, size, and conductor material.

2.3 SHUNT TRIP SWITCHES

A. Manufacturers: Subject to compliance with requirements, provide products by one of the following:
1. Cooper Bussmann, Inc.
2. Ferraz Shawmut, Inc.
3. Littelfuse, Inc.

B. Show voltage and ampere ratings of shunt trip switches and fuses on Drawings. See Editing Instruction No. 4 and "Shunt Trip Switches" Article in the Evaluations for guidance on using shunt trip switches.

C. Retain option in first paragraph below if shunt trip switches are used as elevator shunt trip disconnects per ASME A17.1 and NFPA 70.

D. General Requirements: Comply with ASME A17.1, UL 50, and UL 98, with 200-kA interrupting and short-circuit current rating when fitted with Class J fuses.

E. Switches: Three-pole, horsepower rated, with integral shunt trip mechanism and Class J fuse block; lockable handle with capability to accept three padlocks; interlocked with cover in closed position.

F. Control Circuit: 120-V ac; obtained from integral control power transformer, with primary and secondary fuses, with a control power source of enough capacity to operate shunt trip, connected pilot, and indicating and control devices.

G. Accessories:
   1. Not all accessories listed in subparagraphs below are available from every listed manufacturer. Verify availability and unique characteristics with manufacturers selected.
   2. Oiltight key switch for key-to-test function.
   3. Oiltight red ON pilot light.
   4. Retain first subparagraph below if using switch for hydraulic elevators with automatic recall. Show required interface wiring on Drawings.
   5. Mechanically interlocked auxiliary contacts that change state when switch is opened and closed.
   6. Form C alarm contacts that change state when switch is tripped.
   7. Retain two subparagraphs below when interfacing elevators with the facility fire-alarm system is required. In first subparagraph, if retaining 24-V dc coil option, a separate 24-V dc source and an initiating contact must be provided by the facility fire-alarm system.
   8. Three-pole, double-throw, fire-safety and alarm relay; verify coil voltage.
   9. Three-pole, double-throw, fire-alarm voltage monitoring relay complying with NFPA 72.

2.4 MOLDED-CASE CIRCUIT BREAKERS

A. Manufacturers: Subject to compliance with requirements, provide products by one of the following:
   1. Eaton Electrical Inc.; Cutler-Hammer Business Unit.
   2. General Electric Company; GE Consumer & Industrial - Electrical Distribution.
   3. Siemens Energy & Automation, Inc.
   4. Square D; a brand of Schneider Electric.

B. General Requirements: Comply with UL 489, NEMA AB 1, and NEMA AB 3, with interrupting capacity to comply with available fault currents.

C. Thermal-Magnetic Circuit Breakers: Inverse time-current element for low-level overloads and instantaneous magnetic trip element for short circuits. Adjustable magnetic trip setting for circuit-breaker frame sizes 250 A and larger.

D. Adjustable, Instantaneous-Trip Circuit Breakers: Magnetic trip element with front-mounted, field-adjustable trip setting.

E. Electronic Trip Circuit Breakers: Field-replaceable rating plug, rms sensing, with the following field-adjustable settings:
   1. Instantaneous trip.
   2. Long- and short-time pickup levels.
   3. Long- and short-time time adjustments.
   4. Ground-fault pickup level, time delay, and I^2t response.

F. Current-Limiting Circuit Breakers: Frame sizes 400 A and smaller, and let-through ratings less than NEMA FU 1, RK-5.

G. Integrally Fused Circuit Breakers: Thermal-magnetic trip element with integral limiter-style fuse listed for use with circuit breaker and trip activation on fuse opening or on opening of fuse compartment door.

H. Ground-Fault, Circuit-Interrupter (GFCI) Circuit Breakers: Single- and two-pole configurations with Class A ground-fault protection (6-mA trip).

I. Ground-Fault, Equipment-Protection (GFEP) Circuit Breakers: With Class B ground-fault protection (30-mA trip).

J. Features and Accessories:
1. Standard frame sizes, trip ratings, and number of poles.
2. Lugs: Mechanical type, suitable for number, size, trip ratings, and conductor material.
3. Application Listing: Appropriate for application; Type SWD for switching fluorescent lighting loads; Type HID for feeding fluorescent and high-intensity discharge lighting circuits.
4. Shunt Trip: Trip coil energized from separate circuit, with coil-clearing contact.
5. Undervoltage Trip: Set to operate at 35 to 75 percent of rated voltage without intentional time delay.

2.5 MOLDED-CASE SWITCHES

A. Manufacturers: Subject to compliance with requirements, provide products by one of the following:
1. Eaton Electrical Inc.; Cutler-Hammer Business Unit.
2. General Electric Company; GE Consumer & Industrial - Electrical Distribution.
3. Siemens Energy & Automation, Inc.
4. Square D; a brand of Schneider Electric.

2.6 ENCLOSURES

A. Enclosed Switches and Circuit Breakers: NEMA AB 1, NEMA KS 1, NEMA 250, and UL 50, to comply with environmental conditions at installed location.
1. Indoor, Dry and Clean Locations: NEMA 250, Type 1.
2. Outdoor Locations: NEMA 250, Type 3R.
3. Kitchen Wash-Down Areas: NEMA 250, Type 4X, stainless steel.
4. Other Wet or Damp, Indoor Locations: NEMA 250, Type 4.
5. Indoor Locations Subject to Dust, Falling Dirt, and Dripping Noncorrosive Liquids: NEMA 250, Type 12.
6. Hazardous Areas Indicated on Drawings: NEMA 250, Type 7.

PART 3 - EXECUTION

3.1 EXAMINATION

A. Examine elements and surfaces to receive enclosed switches and circuit breakers for compliance with installation tolerances and other conditions affecting performance of the Work.

B. Proceed with installation only after unsatisfactory conditions have been corrected.

3.2 INSTALLATION

A. Install individual wall-mounted switches and circuit breakers with tops at uniform height unless otherwise indicated.

B. Comply with mounting and anchoring requirements specified in Section 260548 "Vibration and Seismic Controls for Electrical Systems."

C. Temporary Lifting Provisions: Remove temporary lifting eyes, channels, and brackets and temporary blocking of moving parts from enclosures and components.

D. Install fuses in fusible devices.

E. Comply with NFPA 70 and NECA 1.

3.3 IDENTIFICATION

A. Comply with requirements in Section 260553 "Identification for Electrical Systems."
   1. Identify field-installed conductors, interconnecting wiring, and components; provide warning signs.
   2. Label each enclosure with engraved metal or laminated-plastic nameplate.

3.4 FIELD QUALITY CONTROL

A. Testing Agency: **Engage** a qualified testing agency to perform tests and inspections.

B. Manufacturer's Field Service: Engage a factory-authorized service representative to inspect, test, and adjust components, assemblies, and equipment installations, including connections.

C. Perform tests and inspections.
   1. Manufacturer's Field Service: Engage a factory-authorized service representative to inspect components, assemblies, and equipment installations, including connections, and to assist in testing.

D. Acceptance Testing Preparation:
   1. Test insulation resistance for each enclosed switch and circuit breaker, component, connecting supply, feeder, and control circuit.
   2. Test continuity of each circuit.

E. Tests and Inspections:
   1. Perform each visual and mechanical inspection and electrical test stated in NETA Acceptance Testing Specification. Certify compliance with test parameters.
   2. Correct malfunctioning units on-site, where possible, and retest to demonstrate compliance; otherwise, replace with new units and retest.
   3. Perform the following infrared scan tests and inspections and prepare reports:
      a. Initial Infrared Scanning: After Substantial Completion, but not more than 60 days after Final Acceptance, perform an infrared scan of each enclosed switch and

circuit breaker. Remove front panels so joints and connections are accessible to portable scanner.

b. Follow-up Infrared Scanning: Perform an additional follow-up infrared scan of each enclosed switch and circuit breaker 11 months after date of Substantial Completion.

c. Instruments and Equipment: Use an infrared scanning device designed to measure temperature or to detect significant deviations from normal values. Provide calibration record for device.

4. Test and adjust controls, remote monitoring, and safeties. Replace damaged and malfunctioning controls and equipment.

F. Enclosed switches and circuit breakers will be considered defective if they do not pass tests and inspections.

G. Prepare test and inspection reports, including a certified report that identifies enclosed switches and circuit breakers and that describes scanning results. Include notation of deficiencies detected, remedial action taken, and observations after remedial action.

3.5 ADJUSTING

A. Adjust moving parts and operable components to function smoothly and lubricate as recommended by manufacturer.

B. Set field-adjustable circuit-breaker trip ranges **as specified in Section 260573 "Overcurrent Protective Device Coordination Study."**

END OF SECTION 262816

SECTION 263213 - ENGINE GENERATORS

PART 1 - GENERAL

1.1 RELATED DOCUMENTS

A. Drawings and general provisions of the Contract, including General and Supplementary Conditions and Division 01 Specification Sections, apply to this Section.

1.2 SUMMARY

A. This Section includes packaged engine-generator sets for **standby** power supply with the following features:
   1. **Diesel** engine.
   2. Generators
   3. Unit-mounted cooling system.
   4. Unit-mounted control and monitoring.
   5. Performance requirements for sensitive loads.
   6. Load banks.
   7. Outdoor enclosure.
   8. Battery charger.
   9. Day tank.
   10. Muffler.
   11. Exhaust piping external to set.
   12. Remote annunciator.
   13. Remote radiator.
   14. Remote stop switch.
   15. Starting battery and charger.
   16. Active diesel particulate filter (DPF).
   17. Independent DPF support structure.

B. Related Sections include the following:
   1. Section 232113 "Hydronic Piping.
   2. Section 260548 “Vibrations and Seismic Controls”
   3. Section 260526 "Grounding and Bonding for Electrical Systems."
   4. Section 262416 “Panelboards”
   5. Section 262816 Enclosed Switches and Circuit Breakers.
   6. Section 263600 "Transfer Switches" for transfer switches including sensors and relays to initiate automatic-starting and -stopping signals for engine-generator sets.

1.3 DEFINITIONS

A. Operational Bandwidth: The total variation from the lowest to highest value of a parameter over the range of conditions indicated, expressed as a percentage of the nominal value of the parameter.

B. LP: Liquid petroleum.

C. NETA: InterNational Electrical Testing Association

D. Steady-State Voltage Modulation: The uniform cyclical variation of voltage within the operational bandwidth, expressed in Hertz or cycles per second.

E. OSHPD: Office of Statewide Health Planning and Development

1.4 STANDARDS

A. National Electrical Manufacturer's Association (NEMA).

B. National Fire Protection Association (NFPA).

C. California Electric Code (CEC).

D. California Air Resource Board (CARB).

E. County of San Diego Air Pollution Control District (SDAPCD).

F. South Coast Air Quality Management District (SCAQMD)

1.5 ACTION SUBMITTALS

A. Product Data: For each type of packaged engine generator indicated. Include rated capacities, operating characteristics, and furnished specialties and accessories. In addition, include the following:
   1. Thermal damage curve for generator.
   2. Time-current characteristic curves for generator protective device.
   3. Technical data sheets of each equipment.

B. Shop Drawings: Detail equipment assemblies and indicate dimensions, weights, loads, required clearances, method of field assembly, components, and location and size of each field connection.
   1. Dimensioned outline plan and elevation drawings of engine-generator set and other components specified.
   2. Brake horsepower of engine.
   3. Fuel consumption and floor plans showing fuel line connections, pipe sizes and pump requirements.
   4. Cooling air requirements and its design.
   5. Noise db level.
   6. Electrical characteristics of generator, voltage regulator, and battery charger.
   7. Load graphs and load calculations to show the capabilities to supply the largest motor while connected to the full load. It shall also indicate the sequencing of the emergency load start-up.
   8. Control panel.

9. Elevations of equipment including front elevation, side elevation, top view for complete assembly.
10. Engine and generator details, including governor, turbocharger, exciter, after/intercooler, **DPF,**[day tank, main fuel storage tank and associated required pumping drawings. The work shall indicate the method of the installation of the electrical, mechanical and plumbing work.
11. Certified independent test lab data of generator characteristics, verification of emissions conformance to latest applicable regulations of CARB and AQMD [or APCD].
12. Main line circuit breaker.
13. List showing manufacturer of each major component.
14. Design Calculations: Signed and sealed by a qualified professional engineer. Calculate requirements for selecting vibration isolators and seismic restraints and for designing vibration isolation bases.
15. Vibration Isolation Base Details: Signed and sealed by a qualified professional engineer. Detail fabrication, including anchorages and attachments to structure and to supported equipment. Include base weights.
16. Wiring Diagrams: Power, signal, and control wiring. Differentiate between manufacturer installed and field installed wiring.
17. Indicate name and place of manufacture of each major component.

Retain subparagraph below if an independently engineered DPF support structure is required to be provided by the contractor. Usually required for OSHPD projects.

18. DPF Support Structure Design Calculations and Details: Signed and sealed by a qualified professional engineer. Calculate requirements and provide design details for the structural support and anchorage of the DPF and associated equipment. The support structure shall support the DPF above, and independent from, the generator enclosure.

1.6 INFORMATIONAL SUBMITTALS

A. Manufacturer Seismic Qualification Certification: Submit certification that day tank, engine-generator set, batteries, battery racks, accessories, and components will withstand seismic forces defined in Section 260548 "Vibration and Seismic Controls for Electrical Systems." Include the following:
   1. Basis for Certification: Indicate whether withstand certification is based on actual test of assembled components or on calculation.
      a. The term "withstand" means "the unit will remain in place without separation of any parts from the device when subjected to the seismic forces specified."
      b. The term "withstand" means "the unit will remain in place without separation of any parts from the device when subjected to the seismic forces specified and the unit will be fully operational after the seismic event."
   2. Manufacturer's dimensioned Outline Drawings of Equipment Unit: Identify center of gravity and locate and describe mounting and anchorage provisions.
   3. Detailed description of equipment anchorage devices on which the certification is based and their installation requirements.
   4. OSHPD Special Seismic Certification (OSP) pre-approval on OSHPD projects.

B. Coordination Drawings: Floor plans, drawn to scale (1/4"=1'-0"), showing dimensioned layout, required working clearances, and required area above and around Engine Generator set where pipe and ducts are prohibited. Show Engine Generator layout and relationships between

electrical components and adjacent structural and mechanical elements. Show support locations, type of support, and weight on each support. Indicate field measurements.

C. Manufacturer's certified letter stating that unit complies with all California State Codes, Uniform Building Code (UBC), California Air Resource Board (CARB), California Electrical Code (CEC), latest edition and supplements and National Electric Manufacturer's Association (NEMA) standards for an emergency power plant.

D. Sound levels shall be measured in the octave bands, having center frequencies from 31.5 Hz to 8000 Hz according to the procedures given in American National Standards Institute (ANSI) Standards Sl.13.71. Measurements shall be made in at least four locations as described in the standard and shall be made at a distance of one meter from the surface of the equipment. Sound levels generated shall be within acceptable limits.

E. Qualification Data: For installer.

F. Source quality-control test reports.
   1. Certified summary of prototype-unit test report.
   2. Certified Test Reports: For components and accessories that are equivalent, but not identical, to those tested on prototype unit.
   3. Certified Summary of Performance Tests: Certify compliance with specified requirement to meet performance criteria for sensitive loads.
   4. Certified Test Report of factory tests on units to be shipped for this Project, showing evidence of compliance with specified requirements. Submit within two (2) weeks of completion of tests. Report shall be signed by a factory testing engineer.
   5. Report of sound generation.
   6. Report of exhaust emissions showing compliance with applicable regulations.
   7. Certified Torsional Vibration Compatibility: Comply with NFPA 110.

G. Field quality-control test reports.

H. Warranty: Special warranty specified in this Section.

1.7 CLOSEOUT SUBMITTALS

A. Operation and Maintenance Data: For packaged engine generators to include in emergency, operation, and maintenance manuals. In addition to items specified in Section 017823 "Operation and Maintenance Data," include the following:
   1. List of tools and replacement items recommended to be stored at Project for ready access. Include part and drawing numbers, current unit prices, and source of supply (address and phone number of sources).

1.8 MAINTENANCE MATERIAL SUBMITTALS

A. Furnish extra materials described below that match products installed and that are packaged with protective covering for storage and identified with labels describing contents.
   1. Fuses: One for every 10 of each type and rating, but no fewer than one of each.
   2. Indicator Lamps: Two for every six of each type used, but no fewer than two of each.

3. Filters: One set each of lubricating oil, fuel, and combustion-air filters.

1.9 QUALITY ASSURANCE

A. If alternate manufacturer of products other than what are specified in this section are submitted, all necessary documents not limited to cut sheets, technical information, test reports from recognized testing labs and factory test reports shall be submitted to the satisfaction of the owner/engineer to ensure quality and conformance to the specifications. Additional testing shall be undertaken if it is concluded by the owner/engineer that the submitted test reports are either insufficient or do not include all tests necessary for product acceptance. The tests shall be conducted by a recognized lab acceptable to the owner/engineer and all tests shall be witnessed by owner's/engineer's personnel. All testing procedures and test results shall be satisfactory to the owner/engineer. Contractor shall be responsible for arranging the tests, for transportation, food and lodging for minimum of one owner's/engineer's representative to witness the test at the testing lab. Include all costs for the above in the bid.

B. Manufacturer Qualifications: A qualified manufacturer. Maintain, within **75** of Project site, a service center capable of providing training, parts, and emergency maintenance repairs.

C. Contractor shall ensure that the manufacturer has a minimum of 15 years experience in the production of Emergency/Standby Engine Generators similar to the type and size specified in this project. Furnish a list of three (3) contacts for the three (3) similar projects completed within the last 5 years. Include name, tele no and email of the facility engineers.

D. Manufacturer shall have ISO 9001 or 9002 Certification.

E. Manufacturer shall have ability to readily provide replacement parts for a minimum period of ten (10) years, from the date of completion of the project. Furnish a letter from the manufacturer confirming the availability.

F. Engine Generators shall be assembled at the manufacturer's own manufacturing facility using its own major devices (e.g., circuit breakers) for the assembly. These devices shall be normally carried by the manufacturer as standard catalog items.

G. Engine Generators shall comply with seismic zone applicable to the project. Unless otherwise indicated, verify requirements with Architect or Structural Engineer of Record (SEOR). Provide certified test reports of shake table test done by manufacturer on similar units.

H. Materials and equipment shall be new, modern in design and shall not have been in prior service except as required by factory tests. Major components (e.g. engines, generators, governers, controls) shall be manufactured within six months of installation.

I. Source Limitations: Obtain packaged engine generators, and accessories through one source from a single manufacturer through a local distributor. Manufacturer of overcurrent devices shall match other power distribution equipment on the project.

J. Comply with ASME B15.1.

K. Comply with NFPA 37.

L. Comply with NFPA 70.

M. Comply with NFPA 99.

N. Comply with NFPA 110 requirements for Level **1 2** emergency power supply system.

O. Comply with UL 2200.

P. Engine Exhaust Emissions: Comply with applicable state and local government requirements. Engine Exhaust Emissions: Apply and obtain a permit to construct and a permit to operate from Air Pollution Control District (authority having jurisdiction of the project) including payment of permit fees and health risk assessment fees. Contractor shall submit complete emission data along with the shop drawings for the generator set within six (6) weeks of receiving Notice to Proceed. Contractor shall not start installation without proper permits from the authority having jurisdiction.

Q. Noise Emission: Comply with **applicable state and local government requirements** for maximum noise level at **adjacent property boundaries** due to sound emitted by generator set including engine, engine exhaust, engine cooling-air intake and discharge, and other components of installation.

R. Product Options: Drawings indicate size, profiles, and dimensional requirements of engine generators and are based on the specific system indicated. Refer to Part 2 "Product Requirements."

S. Electrical Components, Devices, and Accessories: UL Listed and labeled as defined in NFPA 70, Article 100–and marked for intended location and application.

T. Testing Agency Qualifications: Member of NETA;
   1. Testing agency shall be an independent company; shall have been a member of NETA for a minimum of ten (10) years and has permanent in-house testing engineers and technicians involved with testing of switchboards, panelboards and OCPDs similar to those specified on this project.
   2. Testing company shall be located with 50 miles radius of the project.
   3. Testing Agency's Field Supervisor: Certified by NETA to supervise on-site testing to supervise on-site testing specified in Part 3.

U. Installer Qualifications: Manufacturer's authorized representative who is trained and approved for installation of units required for this Project.
   1. Maintenance Proximity: Not more than four hours' normal travel time from Installer's place of business to Project site.
   2. Engineering Responsibility: Preparation of data for vibration isolators and seismic restraints of engine skid mounts, including Shop Drawings, based on testing and engineering analysis of manufacturer's standard units in assemblies similar to those indicated for this Project.

1.10 PROJECT CONDITIONS

A. Environmental Conditions: Engine-generator system shall withstand the following environmental conditions without mechanical or electrical damage or degradation of performance capability:
   1. Ambient Temperature: [5 to 40 deg C] [Minus 15 to plus 40 deg C].
   2. Relative Humidity: 0 to 95 percent.
   3. Altitude: Sea level to **1000 feet**.

B. Unusual Service Conditions: Engine-generator equipment and installation are required to operate under the following conditions:
   1. [High salt-dust content in the air due to sea-spray evaporation] <Insert unusual condition>.

1.11 COORDINATION

A. Coordinate size and location of concrete bases for package engine generators. Cast anchor-bolt inserts into bases. Concrete, reinforcement, and formwork requirements are specified with concrete.

B. Coordinate size and location of roof curbs, equipment supports, and roof penetrations for remote radiators. These items are specified in Section 077200 "Roof Accessories."

1.12 WARRANTY

A. Special Warranty: Manufacturer's standard form in which manufacturer agrees to repair or replace components of packaged engine generators and associated auxiliary components that fail in materials or workmanship within specified warranty period.
   1. Warranty Period: T**wo** years from date of Substantial Completion.

1.13 MAINTENANCE SERVICE

A. Initial Maintenance Service: Beginning at Substantial Completion, provide 24 months' full maintenance by skilled employees of manufacturer's designated service organization. Include quarterly exercising to check for proper starting, load transfer, and running under load. Include routine preventive maintenance as recommended by manufacturer and adjusting as required for proper operation. Provide parts and supplies same as those used in the manufacture and installation of original equipment.

PART 2 - PRODUCTS

2.1 MANUFACTURERS

A. Manufacturers: Subject to compliance with requirements, provide products by one of the following:
   1. Caterpillar; Engine Div.
   2. Onan/Cummins Power Generation; Industrial Business Group
   3. Kohler Co.; Generator Division.
   4. Generac Power Systems.

2.2 ENGINE-GENERATOR SET

A. Factory-assembled and -tested, engine-generator set.

B. Mounting Frame: Maintain alignment of mounted components without depending on concrete foundation; and have lifting attachments.
   1. Rigging Diagram: Inscribed on metal plate permanently attached to mounting frame to indicate location and lifting capacity of each lifting attachment and generator-set center of gravity.

C. Capacities and Characteristics:
   1. Power Output Ratings: Nominal ratings as indicated[, with capacity as required to operate as a unit as evidenced by records of prototype testing].
   2. Output Connections: Three-phase, **four** wire or Single phase three wire. Refer to drawings for more information.
   3. Nameplates: For each major system component to identify manufacturer's name and address, and model and serial number of component.

D. Generator-Set Performance:
   1. Steady-State Voltage Operational Bandwidth: 3 percent of rated output voltage from no load to full load.
   2. Transient Voltage Performance: Not more than 20 percent variation for 50 percent step-load increase or decrease. Voltage shall recover and remain within the steady-state operating band within three seconds.
   3. Steady-State Frequency Operational Bandwidth: 0.5 percent of rated frequency from no load to full load.
   4. Steady-State Frequency Stability: When system is operating at any constant load within the rated load, there shall be no random speed variations outside the steady-state operational band and no hunting or surging of speed.
   5. Transient Frequency Performance: Less than 5 percent variation for 50 percent step-load increase or decrease. Frequency shall recover and remain within the steady-state operating band within five seconds.
   6. Output Waveform: At no load, harmonic content measured line to line or line to neutral shall not exceed 5 percent total and 3 percent for single harmonics. Telephone influence factor, determined according to NEMA MG 1, shall not exceed 50 percent.
   7. Sustained Short-Circuit Current: For a 3-phase, bolted short circuit at system output terminals, system shall supply a minimum of 250 percent of rated full-load current for not less than 10 seconds and then clear the fault automatically, without damage to generator system components.
   8. Start Time: Comply with NFPA 110, Type 10, system requirements.

E. Generator-Set Performance for Sensitive Loads:
   1. Oversizing generator compared with the rated power output of the engine is permissible to meet specified performance.

a. Nameplate Data for Oversized Generator: Show ratings required by the Contract Documents rather than ratings that would normally be applied to generator size installed.

2. Steady-State Voltage Operational Bandwidth: 1 percent of rated output voltage from no load to full load.
3. Transient Voltage Performance: Not more than 10 percent variation for 50 percent step-load increase or decrease. Voltage shall recover and remain within the steady-state operating band within 0.5 second.
4. Steady-State Frequency Operational Bandwidth: Plus or minus 0.25 percent of rated frequency from no load to full load.
5. Steady-State Frequency Stability: When system is operating at any constant load within the rated load, there shall be no random speed variations outside the steady-state operational band and no hunting or surging of speed.
6. Transient Frequency Performance: Less than 2-Hz variation for 50 percent step-load increase or decrease. Frequency shall recover and remain within the steady-state operating band within three seconds.
7. Output Waveform: At no load, harmonic content measured line to neutral shall not exceed 2 percent total with no slot ripple. Telephone influence factor, determined according to NEMA MG 1, shall not exceed 50 percent.
8. Sustained Short-Circuit Current: For a 3-phase, bolted short circuit at system output terminals, system shall supply a minimum of 300 percent of rated full-load current for not less than 10 seconds and then clear the fault automatically, without damage to winding insulation or other generator system components.
9. Excitation System: Performance shall be unaffected by voltage distortion caused by nonlinear load.
   a. Provide permanent magnet excitation for power source to voltage regulator.
10. Start Time: Comply with NFPA 110, Type 10, system requirements.

2.3 ENGINE

A. Fuel: ASTM D975, diesel fuel oil, Grade 2-D S15.

B. Rated Engine Speed: 1800 rpm.

C. Maximum Piston Speed for Four-Cycle Engines: 2250 fpm.

D. Lubrication System: The following items are mounted on engine or skid:
   1. Filter and Strainer: Rated to remove 90 percent of particles 5 micrometers and smaller while passing full flow.
   2. Thermostatic Control Valve: Control flow in system to maintain optimum oil temperature. Unit shall be capable of full flow and is designed to be fail-safe.
   3. Crankcase Drain: Arranged for complete gravity drainage to an easily removable container with no disassembly and without use of pumps, siphons, special tools, or appliances.

E. Engine Fuel System:
   1. Main Fuel Pump: Mounted on engine. Pump ensures adequate primary fuel flow under starting and load conditions.

2. Relief-Bypass Valve: Automatically regulates pressure in fuel line and returns excess fuel to source.
3. Dual Natural Gas with LP-Gas Backup (Vapor-Withdrawal) System:
   a. Carburetor.
   b. Secondary Gas Regulators: One for each fuel type.
   c. Fuel-Shutoff Solenoid Valves: One for each fuel source.
   d. Flexible Fuel Connectors: One for each fuel source.

F. Coolant Jacket Heater: Electric-immersion type, factory installed in coolant jacket system. Comply with NFPA 110 requirements for Level 1 equipment for heater capacity.

G. Governor: Adjustable isochronous, with speed sensing.

H. Cooling System: Closed loop, liquid cooled, with radiator factory mounted on engine-generator-set mounting frame and integral engine-driven coolant pump.
1. Coolant: Solution of 50 percent ethylene-glycol-based antifreeze and 50 percent water, with anticorrosion additives as recommended by engine manufacturer.
2. Size of Radiator: Adequate to contain expansion of total system coolant from cold start to 110 percent load condition.
3. Expansion Tank: Constructed of welded steel plate and rated to withstand maximum closed-loop coolant system pressure for engine used. Equip with gage glass and petcock.
4. Temperature Control: Self-contained, thermostatic-control valve modulates coolant flow automatically to maintain optimum constant coolant temperature as recommended by engine manufacturer.
5. Coolant Hose: Flexible assembly with inside surface of nonporous rubber and outer covering of aging-, ultraviolet-, and abrasion-resistant fabric.
   a. Rating: 50-psig maximum working pressure with coolant at 180 deg F, and non-collapsible under vacuum.
   b. End Fittings: Flanges or steel pipe nipples with clamps to suit piping and equipment connections.

I. Cooling System: Closed loop, liquid cooled, with remote radiator and integral engine-driven coolant pump.
1. Configuration: Vertical air discharge.
2. Radiator Core Tubes: [Aluminum] [Nonferrous-metal construction other than aluminum].
3. Size of Radiator: Adequate to contain expansion of total system coolant from cold start to 110 percent load condition.
4. Expansion Tank: Constructed of welded steel plate and rated to withstand maximum closed-loop coolant system pressure for engine used. Equip with gage glass and petcock.
5. Fan: Driven by [multiple belts from engine shaft] [totally enclosed electric motor with sealed bearings].
6. Coolant: Solution of 50 percent ethylene-glycol-based antifreeze and 50 percent water, with anticorrosion additives as recommended by engine manufacturer.
7. Temperature Control: Self-contained, thermostatic-control valve modulates coolant flow automatically to maintain optimum constant coolant temperature as recommended by engine manufacturer.

A. Muffler/Silencer: Critical type, super quiet, sized as recommended by engine manufacturer and selected with exhaust piping system to not exceed engine manufacturer's engine backpressure requirements.

Provide stainless steel type muffler including pipe connection to engine where these are exposed to weather.

1. Minimum sound attenuation of 25 dB at 500 Hz.
2. Sound level measured at a distance of 10 feet from exhaust discharge after installation is complete shall be 85 dBA or less.

~~B. Muffler/Silencer: Residential type, sized as recommended by engine manufacturer and selected with exhaust piping system to not exceed engine manufacturer's engine backpressure requirements.~~

1. Minimum sound attenuation of 18 dB at 500 Hz.
2. Sound level measured at a distance of ~~10 feet~~ from exhaust discharge after installation is complete shall be 95 dBA or less.

C. Muffler/Silencer: Industrial type, super quiet, sized as recommended by engine manufacturer and selected with exhaust piping system to not exceed engine manufacturer's engine backpressure requirements. **Provide stainless steel type muffler including pipe connection to engine where these are exposed to weather.**

1. Minimum sound attenuation of 12 dB at 500 Hz.
2. Sound level measured at a distance of 25 feet from exhaust discharge after installation is complete shall be 87 dBA or less.

D. Air-Intake Filter: **Heavy**-duty, engine-mounted air cleaner with replaceable dry-filter element and "blocked filter" indicator. Provide new filters after completion for field tests and before acceptance by the owner.

E. Starting System: 24V electric, with negative ground.

1. Components: Sized so they will not be damaged during a full engine-cranking cycle with ambient temperature at maximum specified in Part 1 "Project Conditions" Article.
2. Cranking Motor: Heavy-duty unit that automatically engages and releases from engine flywheel without binding.
3. Cranking Cycle: [As required by NFPA 110 for system level specified] [60 seconds].
4. Battery: Adequate capacity within ambient temperature range specified in Part 1 "Project Conditions" Article to provide specified cranking cycle at least twice without recharging.
5. Battery Cable: Size as recommended by engine manufacturer for cable length indicated. Include required interconnecting conductors and connection accessories.
6. Battery Compartment: Factory fabricated of metal with acid-resistant finish and thermal insulation. Thermostatically controlled heater shall be arranged to maintain battery above 10 deg C regardless of external ambient temperature within range specified in Part 1 "Project Conditions" Article. Include accessories required to support and fasten batteries in place.
7. Battery-Charging Alternator: Factory mounted on engine with solid-state voltage regulation and 35-A minimum continuous rating.
8. Battery Charger: Current-limiting, automatic-equalizing and float-charging type. Unit shall comply with UL 1236 and include the following features:
   a. Operation: Equalizing-charging rate of 10 A shall be initiated automatically after battery has lost charge until an adjustable equalizing voltage is achieved at battery terminals. Unit shall then be automatically switched to a lower float-charging mode and shall continue to operate in that mode until battery is discharged again.

b. Automatic Temperature Compensation: Adjust float and equalize voltages for variations in ambient temperature from minus 40 deg C to plus 60 deg C to prevent overcharging at high temperatures and undercharging at low temperatures.
c. Automatic Voltage Regulation: Maintain constant output voltage regardless of input voltage variations up to plus or minus 10 percent.
d. Ammeter and Voltmeter: Flush mounted in door. Meters shall indicate charging rates.
e. Safety Functions: Sense abnormally low battery voltage and close contacts providing low battery voltage indication on control and monitoring panel. Sense high battery voltage and loss of ac input or dc output of battery charger. Either condition shall close contacts that provide a battery-charger malfunction indication at system control and monitoring panel.
f. Enclosure and Mounting: NEMA 250, Type 1, wall-mounted cabinet.

2.4 FUEL OIL STORAGE

A. Comply with NFPA 30. Fuel system shall be complete and shall consist of a dual filtering system, fuel storage tank, day tank and engine fuel pump. Provide fuel for testing and full tank after testing.

B. Piping: Fuel-oil piping shall be Schedule 40 black steel, complying with requirements in Section 231113 "Facility Fuel-Oil Piping." Cast iron, aluminum, copper, and galvanized steel shall not be used in the fuel-oil system

C. Base-Mounted, Double-Wall Fuel Oil Tank: Factory installed and piped, complying with UL 142 fuel oil tank. Features include the following:
1. Tank level indicator.
2. Capacity: Fuel for **48** hours' continuous operation at 100 percent rated power output.
3. Leak detection in interstitial space.
4. Vandal-resistant fill cap.
5. Containment Provisions: Comply with requirements of authorities having jurisdiction.

2.5 CONTROL AND MONITORING

A. Automatic Starting System Sequence of Operation: When mode-selector switch on the control and monitoring panel is in the automatic position, remote-control contacts in one or more separate automatic transfer switches initiate starting and stopping of generator set. When mode-selector switch is switched to the on position, generator set starts. The off position of same switch initiates generator-set shutdown. When generator set is running, specified system or equipment failures or derangements automatically shut down generator set and initiate alarms. Operation of a remote emergency-stop switch also shuts down generator set.

B. Manual Starting System Sequence of Operation: Switching on-off switch on the generator control panel to the on position starts generator set. The off position of same switch initiates generator-set shutdown. When generator set is running, specified system or equipment failures or derangements automatically shut down generator set and initiate alarms. Operation of a remote emergency-stop switch also shuts down generator set.

C. Configuration: Operating and safety indications, protective devices, basic system controls, and engine gages shall be grouped in a common control and monitoring panel mounted on the generator set. Mounting method shall isolate the control panel from generator-set vibration.

D. Configuration: Operating and safety indications, protective devices, basic system controls, and engine gages shall be grouped in a common wall-mounted control and monitoring panel.

E. Configuration: Operating and safety indications, protective devices, basic system controls, engine gages, instrument transformers, generator disconnect switch or circuit breaker, and other indicated components shall be grouped in a combination control and power panel. Control and monitoring section of panel shall be isolated from power sections by steel barriers. Panel features shall include the following:
   1. Wall-Mounting Cabinet Construction: Rigid, self-supporting steel unit complying with NEMA ICS 6. Power bus shall be copper. Bus, bus supports, control wiring, and temperature rise shall comply with UL 891.
   2. Switchboard Construction: Freestanding unit complying with Section 262413 "Switchboards."
   3. Switchgear Construction: Freestanding unit complying with Section 262300 "Low-Voltage Switchgear."
   4. Current and Potential Transformers: Instrument accuracy class.

F. Indicating and Protective Devices and Controls: As required by NFPA 110 for Level **1** system, and the following:
   1. AC voltmeter.
   2. AC ammeter.
   3. AC frequency meter.
   4. DC voltmeter (alternator battery charging).
   5. Engine-coolant temperature gage.
   6. Engine lubricating-oil pressure gage.
   7. Running-time meter.
   8. Ammeter-voltmeter, phase-selector switch(es).
   9. Generator-voltage adjusting rheostat.
   10. Fuel tank derangement alarm.
   11. Fuel tank high-level shutdown of fuel supply alarm.
   12. Generator overload.

G. Indicating and Protective Devices and Controls:
   1. AC voltmeter.
   2. AC ammeter.
   3. AC frequency meter.
   4. DC voltmeter (alternator battery charging).
   5. Engine-coolant temperature gage.
   6. Engine lubricating-oil pressure gage.
   7. Running-time meter.
   8. Ammeter-voltmeter, phase-selector switch(es).
   9. Generator-voltage adjusting rheostat.
   10. Start-stop switch.
   11. Overspeed shutdown device.
   12. Coolant high-temperature shutdown device.
   13. Coolant low-level shutdown device.

14. Oil low-pressure shutdown device.
15. Fuel tank derangement alarm.
16. Fuel tank high-level shutdown of fuel supply alarm.
17. Generator overload.

H. Supporting Items: Include sensors, transducers, terminals, relays, and other devices and include wiring required to support specified items. Locate sensors and other supporting items on engine or generator, unless otherwise indicated.

I. Connection to Data Link: A separate terminal block, factory wired to Form C dry contacts, for each alarm and status indication is reserved for connections for data-link transmission of indications to remote data terminals. Data system connections to terminals are covered in Section 260913 "Electrical Power Monitoring and Control."

J. Common Remote Audible Alarm: Comply with NFPA 110 requirements for Level 1 systems. Include necessary contacts and terminals in control and monitoring panel.
1. Overcrank shutdown.
2. Coolant low-temperature alarm.
3. Control switch not in auto position.
4. Battery-charger malfunction alarm.
5. Battery low-voltage alarm.

K. Common Remote Audible Alarm: Signal the occurrence of any events listed below without differentiating between event types. Connect so that after an alarm is silenced, clearing of initiating condition will reactivate alarm until silencing switch is reset.
1. Engine high-temperature shutdown.
2. Lube-oil, low-pressure shutdown.
3. Overspeed shutdown.
4. Remote emergency-stop shutdown.
5. Engine high-temperature prealarm.
6. Lube-oil, low-pressure prealarm.
7. Fuel tank, low-fuel level.
8. Low coolant level.

L. Remote Alarm Annunciator: Comply with NFPA 99. An LED labeled with proper alarm conditions shall identify each alarm event and a common audible signal shall sound for each alarm condition. Silencing switch in face of panel shall silence signal without altering visual indication. Connect so that after an alarm is silenced, clearing of initiating condition will reactivate alarm until silencing switch is reset. Cabinet and faceplate are surface- or flush-mounting type to suit mounting conditions indicated.

M. Remote Emergency-Stop Switch: Red mush-room head type with an engraved label “EMERGENNCY STOP SWITCH”. Flush; wall mounted, unless otherwise indicated; and labeled. Push button shall be protected from accidental operation with a transparent see-thru lexan cover.

2.6 GENERATOR OVERCURRENT AND FAULT PROTECTION

A. Generator Circuit Breaker (**below 400A Frame**): Molded-case, thermal-magnetic type; 100 percent rated; complying with NEMA AB 1 and UL 489.
   1. Tripping Characteristic: Designed specifically for generator protection.
   2. Trip Rating: Matched to generator rating.
   3. Shunt Trip: Connected to trip breaker when generator set is shut down by other protective devices.
   4. Mounting: Adjacent to or integrated with control and monitoring panel.
   5. Enclosure: Provide NEMA 4X stainless steel enclosure for breakers mounted exposed to weather.

B. Generator Circuit Breaker (**400A Frame and above**): Molded-case, electronic-trip type; 100 percent rated; complying with UL 489.
   1. Tripping Characteristics: Field adjustable long-time and short-time delay and instantaneous. Trip unit shall be field replaceable.
   2. Trip Settings: Selected to coordinate with generator thermal damage curve.
   3. Shunt Trip: Connected to trip breaker when generator set is shut down by other protective devices.
   4. Mounting: Adjacent to or integrated with control and monitoring panel.
   5. Enclosure: Provide NEMA 4X stainless steel enclosure for breakers mounted exposed to weather.

C. Generator Circuit Breaker (**400A Frame and above**): Insulated-case, electronic-trip type; 100 percent rated; complying with UL 489.
   1. Tripping Characteristics: Field adjustable long-time and short-time delay and instantaneous. Trip unit shall be field replaceable.
   2. Trip Settings: Selected to coordinate with generator thermal damage curve.
   3. Shunt Trip: Connected to trip breaker when generator set is shut down by other protective devices.
   4. Mounting: Adjacent to or integrated with control and monitoring panel.
   5. Enclosure: Provide NEMA 4X stainless steel enclosure for breakers mounted exposed to weather.

D. Generator Disconnect Switch: Molded-case type, 100 percent rated.
   1. Rating: Matched to generator output rating.
   2. Shunt Trip: Connected to trip switch when signaled by generator protector or by other protective devices.
   3. Enclosure: Provide NEMA 4X stainless steel enclosure for breakers mounted exposed to weather.

E. Generator Protector: Microprocessor-based unit shall continuously monitor current level in each phase of generator output, integrate generator heating effect over time, and predict when thermal damage of alternator will occur. When signaled by generator protector or other generator-set protective devices, a shunt-trip device in the generator disconnect switch shall open the switch to disconnect the generator from load circuits. Protector shall perform the following functions:
   1. Initiates a generator overload alarm when generator has operated at an overload equivalent to 110 percent of full-rated load for 60 seconds. Indication for this alarm is integrated with other generator-set malfunction alarms.

2. Under single or three-phase fault conditions, regulates generator to 300 percent of rated full-load current for up to 10 seconds.
3. As overcurrent heating effect on the generator approaches the thermal damage point of the unit, protector switches the excitation system off, opens the generator disconnect device, and shuts down the generator set.
4. Senses clearing of a fault by other overcurrent devices and controls recovery of rated voltage to avoid overshoot.

F. Ground-Fault Indication: Comply with NFPA 70, "Emergency System" signals for ground-fault. Integrate ground-fault alarm indication with other generator-set alarm indications. Alarm shall be remotely monitored by BMS.

2.7 GENERATOR, EXCITER, AND VOLTAGE REGULATOR

A. Comply with NEMA MG 1.

B. Drive: Generator shaft shall be directly connected to engine shaft. Exciter shall be rotated integrally with generator rotor.

C. Electrical Insulation: Class H or Class F.

D. Stator-Winding Leads: Brought out to terminal box to permit future reconnection for other voltages if required.

E. Construction shall prevent mechanical, electrical, and thermal damage due to vibration, overspeed up to 125 percent of rating, and heat during operation at 110 percent of rated capacity.

F. Enclosure: Drip proof.

G. Instrument Transformers: Mounted within generator enclosure.

H. Voltage Regulator: Solid-state type, separate from exciter, providing performance as specified.
1. Adjusting rheostat on control and monitoring panel shall provide plus or minus 5 percent adjustment of output-voltage operating band.

I. Strip Heater: Thermostatically controlled unit arranged to maintain stator windings above dew point.

J. Windings: Two-thirds pitch stator winding and fully linked amortisseur winding.

K. Subtransient Reactance: 12 percent, maximum.

2.8 LOAD BANK

A. Description: provide permenant hookup cabinet for conenction of portable load bank.

B. Resistive Load Elements: Corrosion-resistant chromium alloy with ceramic and steel supports. Elements shall be double insulated and designed for repetitive on-off cycling. Elements shall be mounted in removable aluminized-steel heater cases.

C. Reactive Load Elements: Epoxy-encapsulated reactor coils.

D. Load-Bank Heat Dissipation: Integral fan with totally enclosed motor shall provide uniform cooling airflow through load elements. Airflow and coil operating current shall be such that, at maximum load, with ambient temperature at the upper end of specified range, load-bank elements operate at not more than 50 percent of maximum continuous temperature rating of resistance elements.

E. Load Element Switching: Remote-controlled contactors switch groups of load elements. Contactor coils are rated 120 V. Contactors shall be located in a separate NEMA 250, Type 3R enclosure within load-bank enclosure, accessible from exterior through hinged doors with tumbler locks.

F. Contactor Enclosures: Heated by thermostatically controlled strip heaters to prevent condensation.

G. Load-Bank Enclosures: NEMA 250, Type 3R, complying with NEMA ICS 6. Finish shall match with finish of the Generator enclosure. Louvers at cooling-air intake and discharge openings shall prevent entry of rain and snow. Openings for airflow shall be screened with 1/2-inch-square, galvanized-steel mesh. Reactive load bank shall include automatic shutters at air intake and discharge.

H. Protective Devices: Power input circuits to load banks shall be fused, and fuses shall be selected to coordinate with generator circuit breaker. Fuse blocks shall be located in contactor enclosure. Cooling airflow and overtemperature sensors shall automatically shut down and lock out load bank until manually reset. Safety interlocks on access panels and doors shall disconnect load power, control, and heater circuits. Fan motor shall be separately protected by overload and short-circuit devices. Short-circuit devices shall be noninterchangeable fuses with 200,000-A interrupting capacity.

I. Remote-Control Panel: Separate from load bank in NEMA 250, Type 1 enclosure with a control power switch and pilot light, and switches controlling groups of load elements.

J. Control Sequence: Control panel may be preset for adjustable single-step loading of generator during automatic exercising.

2.9 OUTDOOR GENERATOR-SET ENCLOSURE

A. Description: Vandal-resistant, weatherproof steel housing wind resistant up to 100 mph. Roof shall be pitched for drainage and overlapping on all sides. Exhaust pipe opening shall be fitted watertight sealing material. Provide a drip shield around the exhaust pipe opening. Multiple panels shall be lockable and provide adequate access to components requiring maintenance. Panels shall be removable by one person without tools. Instruments and control shall be mounted within enclosure and accessible by opening the hinged panel doors. Panel doors shall swing out 180 degrees.

B. Description: Prefabricated or pre-engineered walk-in enclosure of sufficient size to allow code required clearances on all sides and maintenance. Provide with the following features:
   1. Construction: Galvanized-steel, or metal-clad, integral structural-steel-framed building erected on concrete foundation. .
   2. Structural Design and Anchorage: Comply with ASCE 7 for wind loads.
   3. Seismic Design: Comply with ASCE 7, Chapter 13, as modified by 2016 California Building Code sections 1613A and 1616A.
   4. Enclosure shall have sound attenuation to reduce the noise to 70dB at 21 feet.
   5. Space Heater: Thermostatically controlled and sized to prevent condensation.
   6. Louvers: Equipped with bird screen and filter arranged to permit air circulation when engine is not running while excluding exterior dust, birds, and rodents.
   7. Hinged Doors: With padlocking provisions.
   8. Ventilation: Louvers equipped with bird screen and filter arranged to permit air circulation while excluding exterior dust, birds, and rodents.
   9. Thermal Insulation: Manufacturer's standard materials and thickness selected in coordination with space heater to maintain winter interior temperature within operating limits required by engine-generator-set components.

C. Engine Cooling Airflow through Enclosure: Maintain temperature rise of system components within required limits when unit operates at 110 percent of rated load for 2 hours with ambient temperature at top of range specified in system service conditions.
   1. Louvers: Fixed-engine, cooling-air inlet and discharge. Storm-proof and drainable louvers prevent entry of rain and snow.
   2. Automatic Dampers: At engine cooling-air inlet and discharge. Dampers shall be closed to reduce enclosure heat loss in cold weather when unit is not operating.

D. Lighting panelboard: Provide a 100A, 120/208V single phase 3 W NEMA 1 lighting panel with main circuit breaker inside the walk-in enclosure. Panel shall have bolt-on type main and branch breakers to serve branch circuits for block heaters, battery charger, interior and exterior lights, outlets, cooling fan plus minimum three spare 20A-1 pole breakers.

E. Interior Lights with Switch: Factory-wired, vapor proof-type fluorescent fixtures within housing; arranged to illuminate controls and accessible interior. Arrange for external electrical connection.
   1. AC lighting system and connection point for operation when remote source is available.
   2. DC lighting system for operation when remote source and generator are both unavailable.

F. Convenience Outlets: Specification grade, factory wired**, GFCI**. Arrange for external electrical connection.

2.10 MOTORS

A. General requirements for motors are specified in Section 230513 "Common Motor Requirements for HVAC Equipment."
   1. Motor Sizes: Minimum size as indicated. If not indicated, large enough so driven load will not require motor to operate in service factor range above 1.0.
   2. Controllers, Electrical Devices, and Wiring: Electrical devices and connections are specified in electrical Sections.

3. Bearings: Regreasable, shielded, antifriction ball bearings suitable for radial and thrust loading.
4. Temperature Rise: Match insulation rating.

2.11 VIBRATION ISOLATION DEVICES

A. Elastomeric Isolator Pads: Oil- and water-resistant elastomer or natural rubber, arranged in single or multiple layers, molded with a nonslip pattern and galvanized-steel baseplates of sufficient stiffness for uniform loading over pad area, and factory cut to sizes that match requirements of supported equipment.
   1. Material: [Standard neoprene] [Natural rubber] [Bridge-bearing neoprene, complying with AASHTO M 251].
   2. Durometer Rating: [**30**] [**40**] [**45**] [**50**] [**60**] [**65**] [**70**] <**Insert number**>.
   3. Number of Layers: [**One**] [**Two**] [**Three**] [**Four**] <**Insert number**>.

B. Restrained Spring Isolators: Freestanding, steel, open-spring isolators with seismic restraint.
   1. Housing: Steel with resilient vertical-limit stops to prevent spring extension due to wind loads or if weight is removed; factory-drilled baseplate bonded to 1/4-inch-thick, elastomeric isolator pad attached to baseplate underside; and adjustable equipment mounting and leveling bolt that acts as blocking during installation.
   2. Outside Spring Diameter: Not less than 80 percent of compressed height of the spring at rated load.
   3. Minimum Additional Travel: 50 percent of required deflection at rated load.
   4. Lateral Stiffness: More than 80 percent of rated vertical stiffness.
   5. Overload Capacity: Support 200 percent of rated load, fully compressed, without deformation or failure.

C. Provide vibration isolation and flexible connector materials for steel piping.

D. Provide vibration isolation and flexible connector materials for exhaust shroud and ductwork.

E. Vibration isolation devices shall not be used to accommodate misalignments or to make bends

2.12 FINISHES

A. Indoor and Outdoor Enclosures and Components: Manufacturer's standard finish over corrosion-resistant pretreatment and compatible primer. **Verify with architect if a custom finish is required.**

2.13 SOURCE QUALITY CONTROL

A. Prototype Testing: Factory test engine-generator set using same engine model, constructed of identical or equivalent components and equipped with identical or equivalent accessories.
   1. Tests: Comply with NFPA 110, Level 1 Energy Converters and with IEEE 115.

B. Project-Specific Equipment Tests: Before shipment, factory test engine-generator set and other system components and accessories manufactured specifically for this Project. Perform tests at rated load and power factor. Include the following tests:
   1. One hour at 25 percent load.
   2. One hour at 50 percent load.
   3. Two hours at 75 percent load.
   4. Two hours at 100 percent load.

C. Test data shall be recorded and included in the maintenance manual. The following test data shall be recorded during factory and field tests:
   1. Voltage:
      a. Strip chart for 15 minutes at 75 percent load.
      b. Strip chart for 15 minutes at 100 percent load.
   2. Current:
      a. Strip chart for 15 minutes at 75 percent load.
      b. Strip chart for 15 minutes at 100 percent load.
   3. Frequency:
      a. Strip chart for 15 minutes at 75 percent load.
      b. Strip chart for 15 minutes at 100 percent load.
   4. Oil Pressure: Record in 15-minute intervals during test.
   5. Water Temperature: Record in 15-minute intervals during test.
   6. Water Pressure: Record in 15-minute intervals during test.
   7. Oil Temperature: Record in 15 minute intervals during test.
   8. KW Output: Record in 15-minute intervals during test.
   9. Test shall include testing with cold start including jacket heaters.
   10. Test components and accessories furnished with installed unit that are not identical to those on tested prototype to demonstrate compatibility and reliability.
   11. Voltage regulation.
   12. Transient and steady-state governing.
   13. Single-step load pickup.
   14. Safety shutdown.
   15. Observation of Factory Tests: Provide 14 days' advance notice of tests and opportunity for observation of tests by University's representative.

D. Report factory test results within 10 days of completion of test.
   1. Report shall be reviewed, signed by the factory testing engineer. Include name of the engineer, date and location of testing.

PART 3 - EXECUTION

3.1 EXAMINATION

A. Examine areas, equipment bases, and conditions, with Installer present, for compliance with requirements for installation and other conditions affecting packaged engine-generator performance.

B. Examine roughing-in of piping systems and electrical connections. Verify actual locations of connections before packaged engine-generator installation.

C. Proceed with installation only after unsatisfactory conditions have been corrected.

3.2 INSTALLATION

A. Comply with packaged engine-generator manufacturers' written installation and alignment instructions and with NFPA 110.

B. Install packaged engine generator to provide access, without removing connections or accessories, for periodic maintenance.

C. Install Schedule 40, black steel piping with welded joints for cooling water piping between engine-generator set and **heat exchanger.** Piping materials and installation requirements are specified in Section 232113 "Hydronic Piping."

D. Install Schedule 40, black steel piping with welded joints and connect to engine muffler. Install thimble at wall. Piping shall be same diameter as muffler outlet. Flexible connectors and steel piping materials and installation requirements are specified in Section 232113 "Hydronic Piping."

E. Install condensate drain piping to muffler drain outlet full size of drain connection with a shutoff valve, stainless-steel flexible connector, and Schedule 40, black steel pipe with welded joints. Flexible connectors and piping materials and installation requirements are specified in Section 232113 "Hydronic Piping."

F. Fuel Piping:
   1. Diesel storage tanks, tank accessories, piping, valves, and specialties for fuel systems are specified in Section 231113 "Facility Fuel-Oil Piping."
   2. Copper and galvanized steel shall not be used in the fuel-oil piping system.

G. Electrical Wiring: Install electrical devices furnished by equipment manufacturers but not specified to be factory mounted.

3.3 CONNECTIONS

A. Piping installation requirements are specified in other Sections. Drawings indicate general arrangement of piping and specialties.

B. Connect fuel, cooling-system, and exhaust-system piping adjacent to packaged engine generator to allow service and maintenance.

C. Connect cooling-system water piping to engine-generator set and [**remote radiator**] [**heat exchanger**] with flexible connectors.

D. Connect engine exhaust pipe to engine with flexible connector.

E. Install exhaust-system piping. Extend to point of termination outside structure. Size piping according to manufacturer's written instructions.

1. Install condensate drain piping for engine exhaust system. Extend drain piping from low points of exhaust system and from muffler to condensate traps and to point of disposition.

F. Connect fuel piping to engines with a gate valve and union and flexible connector.
   1. Diesel storage tanks, tank accessories, piping, valves, and specialties for fuel systems are specified in Section 231113 "Facility Fuel-Oil Piping."
   2. Natural-gas piping, valves, and specialties for gas distribution are specified in Section 231123 "Facility Natural-Gas Piping."
   3. LP-gas piping, valves, and specialties for gas piping are specified in Section 231126 "Facility Liquefied-Petroleum Gas Piping."

G. Ground equipment according to Section 260526 "Grounding and Bonding for Electrical Systems."

H. Connect wiring according to Section 260519 "Low-Voltage Electrical Power Conductors and Cables."

3.4 IDENTIFICATION

A. Identify system components according to Section 230553 "Identification for HVAC Piping and Equipment" and Section 260553 "Identification for Electrical Systems."

B. Install a warning sign at the neutral to ground bond location indicating:
   1. “WARNING: SHOCK HAZARD EXISTS IF GROUNDING ELECTRODE CONDUCTOR OR BONDING JUMPER CONNECTION IN THIS EQUIPMENT IS REMOVED WHILE ALTERNATE SOURCE IS ENERGIZED.”

3.5 FIELD QUALITY CONTROL

A. Testing Agency: **Engage** a qualified testing agency to perform tests and inspections and prepare test reports.

B. Manufacturer's Field Service: Engage a factory-authorized service representative to inspect, test, and adjust components, assemblies, and equipment installations, including connections. Report results in writing.

C. Perform tests and inspections and prepare test reports.
   1. Manufacturer's Field Service: Engage a factory-authorized service representative to inspect components, assemblies, and equipment installations, including connections, and to assist in testing.

D. Tests and Inspections:
   1. Perform tests recommended by manufacturer and each electrical test and visual and mechanical inspection[**(except those indicated to be optional)**] for "AC Generators and for Emergency Systems" specified in NETA Acceptance Testing Specification. Certify compliance with test parameters.
   2. NFPA 110 Acceptance Tests: Perform tests required by NFPA 110 that are additional to those specified here including, but not limited to, single-step full-load pickup test.

3. Battery Tests: Equalize charging of battery cells according to manufacturer's written instructions. Record individual cell voltages.
   a. Measure charging voltage and voltages between available battery terminals for full-charging and float-charging conditions. Check electrolyte level and specific gravity under both conditions.
   b. Test for contact integrity of all connectors. Perform an integrity load test and a capacity load test for the battery.
   c. Verify acceptance of charge for each element of the battery after discharge.
   d. Verify that measurements are within manufacturer's specifications.
4. Battery-Charger Tests: Verify specified rates of charge for both equalizing and float-charging conditions.
5. System Integrity Tests: Methodically verify proper installation, connection, and integrity of each element of engine-generator system before and during system operation. Check for air, exhaust, and fluid leaks.
6. Exhaust-System Back-Pressure Test: Use a manometer with a scale exceeding 40-inch wg. Connect to exhaust line close to engine exhaust manifold. Verify that back pressure at full-rated load is within manufacturer's written allowable limits for the engine.
7. Exhaust Emissions Test: Comply with applicable government test criteria.
8. Voltage and Frequency Transient Stability Tests: Use recording oscilloscope to measure voltage and frequency transients for 50 and 100 percent step-load increases and decreases and verify that performance is as specified.
9. Harmonic-Content Tests: Measure harmonic content of output voltage under 25 percent and at 100 percent of rated linear load. Verify that harmonic content is within specified limits.
10. Noise Level Tests: Measure A-weighted level of noise emanating from generator-set installation, including engine exhaust and cooling-air intake and discharge, at four locations **on the property line**>, and compare measured levels with required values.

E. Coordinate tests with tests for transfer switches and run them concurrently.

F. Test instruments shall have been calibrated within the last 12 months, traceable to standards of NIST, and adequate for making positive observation of test results. Make calibration records available for examination on request.

G. Leak Test: After installation, charge system and test for leaks. Repair leaks and retest until no leaks exist.

H. Operational Test: After electrical circuitry has been energized, start units to confirm proper motor rotation and unit operation.

I. Test and adjust controls and safeties. Replace damaged and malfunctioning controls and equipment.

J. Remove and replace malfunctioning units and **retest** as specified above.

K. Retest: Correct deficiencies identified by tests and observations and retest until specified requirements are met.

L. Report results of tests and inspections in writing. Record adjustable relay settings and measured insulation resistances, time delays, and other values and observations. Attach a label or tag to each tested component indicating satisfactory completion of tests.

M. Infrared Scanning: After Substantial Completion, but not more than 60 days after Final Acceptance, perform an infrared scan of each power wiring termination and each bus connection. Remove all access panels so terminations and connections are accessible to portable scanner.
   1. Follow-up Infrared Scanning: Perform an additional follow-up infrared scan 11 months after date of Substantial Completion.
   2. Instrument: Use an infrared scanning device designed to measure temperature or to detect significant deviations from normal values. Provide calibration record for device.
   3. Record of Infrared Scanning: Prepare a certified report that identifies terminations and connections checked and that describes scanning results. Include notation of deficiencies detected, remedial action taken, and observations after remedial action.

3.6 DEMONSTRATION

A. Engage a factory-authorized service representative to train Owner's maintenance personnel to adjust, operate, and maintain packaged engine generators. Training shall be held on site after the generator set is complete and fully functional. Refer to Section 017900 "Demonstration and Training."

END OF SECTION 263213

SECTION 263600 - TRANSFER SWITCHES

PART 1 - GENERAL

1.1 RELATED DOCUMENTS

A. Drawings and general provisions of the Contract, including General and Supplementary Conditions and Division 01 Specification Sections, apply to this Section.

1.2 SUMMARY

A. This Section includes transfer switches rated 600 V and less, including the following:
   1. Automatic transfer switches.
   2. Bypass/isolation switches.
   3. Nonautomatic transfer switches.
   4. Remote annunciation systems.
   5. Remote annunciation and control systems.

B. Related Sections include the following:
   1. Section 213113 "Electric-Drive, Centrifugal Fire Pumps" for automatic transfer switches for fire pumps.
   2. Section 213213 "Electric-Drive, Vertical-Turbine Fire Pumps" for automatic transfer switches for fire pumps.

1.3 DEFINITIONS

A. ATS: Automatic Transfer Switch

B. BP/IS: Bypass switch and Isolation Switch

C. EMI: Electromagnetic interference.

D. LCD: Liquid-crystal display.

E. LED: Light-emitting diode.

F. NETA: InterNational Electrical Testing Association.

G. PC: Personal computer.

H. THD: Total harmonic distortion.

I. UPS: Uninterruptible power supply.

1.4 PERFORMANCE REQUIREMENTS

A. Seismic Performance: Transfer switches shall withstand the effects of earthquake motions determined according to.
   1. The term "withstand" means "the unit will remain in place without separation of any parts from the device when subjected to the seismic forces specified and the unit will be fully operational after the seismic event."

1.5 ACTION SUBMITTALS

A. Product Data: For each type of product indicated. Include rated capacities, weights, operating characteristics, furnished specialties, and accessories.

B. Shop Drawings: Dimensioned plans, elevations, sections, and details showing minimum clearances on all sides, conductor entry provisions, gutter space, installed features and devices, and material lists for each switch specified. Drawings shall be drawn to scale (1/4”=1’-0”).
   1. Single-Line Diagram: Show connections between transfer switch, bypass/isolation switch, power sources, and load; and show interlocking provisions for each combined transfer switch and bypass/isolation switch.

1.6 INFORMATIONAL SUBMITTALS

A. Manufacturer Seismic Qualification Certification: Submit certification that transfer switches accessories, and components will withstand seismic forces defined in Section 260548 "Vibration and Seismic Controls for Electrical Systems." Include the following:
   1. Basis for Certification: Indicate whether withstand certification is based on actual test of assembled components or on calculation.
      a. The term "withstand" means "the unit will remain in place without separation of any parts from the device when subjected to the seismic forces specified."
      b. The term "withstand" means "the unit will remain in place without separation of any parts from the device when subjected to the seismic forces specified and the unit will be fully operational after the seismic event."
   2. Dimensioned Outline Drawings of Equipment Unit: Identify center of gravity and locate and describe mounting and anchorage provisions.
   3. Detailed description of equipment anchorage devices on which the certification is based and their installation requirements.

B. Field quality-control test reports.
   1. Test procedures used.
   2. Test results that comply with requirements.
   3. Results of failed tests and corrective action taken to achieve test results that comply with requirements.

1.7 CLOSEOUT SUBMITTALS

A. Operation and Maintenance Data: For each type of product to include in emergency, operation, and maintenance manuals. In addition to items specified in Section 017823 "Operation and Maintenance Data," include the following:
   1. Features and operating sequences, both automatic and manual.
   2. List of all factory settings of relays; provide relay-setting and calibration instructions, including software, where applicable.

1.8 QUALITY ASSURANCE

A. American made products have been acceptable to the Owner. If non-domestic products are submitted, notice is hereby given that extensive testing shall be required to insure quality and conformance to the Specifications. Testing shall be done by a recognized lab acceptable to the Owner and all tests shall be witnessed by Owner's personnel. Testing procedures and test results shall be satisfactory to the Owner. Contractor shall be responsible for arranging the tests, for transportation, food and lodging for minimum of one Owner's representative to witness the test at the testing lab. Include all costs for the above in the bid.

B. Manufacturer Qualifications: A qualified manufacturer. Maintain, within 75-**miles (120 kms** of Project site, a service center capable of providing training, parts, and emergency maintenance repairs within 8 hours from the time of notification.

C. Contractor shall ensure that the manufacturer has a minimum of 15 years experience in the production of Emergency/Standby Engine Generators similar to the type and size specified in this project. Furnish a list of three (3) contacts for the three (3) similar projects completed within the last 5 years. Include name, tele no and email of the facility engineers.

D. Manufacturer shall have ISO 9001 or 9002 Certification.

E. Manufacturer shall have ability to readily provide replacement parts for a minimum period of ten (10) years, from the date of completion of the project. Furnish a letter from the manufacturer confirming the availability.

F. Transfer Switch shall be assembled at the manufacturer's own manufacturing facility using its own major devices (e.g., contactors) for the assembly. These devices shall be normally carried by the manufacturer as standard catalog items.

G. Transfer Switch shall comply with seismic zone applicable to the project. Unless otherwise indicated, verify requirements with Architect or Structural Engineer of Record (SEOR). Provide certified test reports of shake table test done by manufacturer on similar units.

H. Materials and equipment shall be new, modern in design and shall not have been in prior service except as required by factory tests. Major components (e.g. contactors, controls) shall be manufactured within six months of installation.

I. Source Limitations: Obtain automatic transfer switches, remote annunciator and control panels through one source from a single manufacturer switch, and accessories through one source from a single manufacturer through a local distributor.

J. Product Options: Drawings indicate size, profiles, and dimensional requirements of engine generators and are based on the specific system indicated. Refer to Part 2 ~~Section 016000~~ "Product Requirements."

K. Electrical Components, Devices, and Accessories: UL Listed and labeled as defined in NFPA 70, Article 100-and marked for intended location and application.

L. Testing Agency Qualifications: Member of NETA;
   1. Testing agency shall be an independent company; shall have been a member of NETA for a minimum of ten (10) years and has permanent in-house testing engineers and technicians involved with testing of transfer switches, Vswitchboards, panelboards and OCPDs similar to those specified on this project.
   2. Testing company shall be located with 50 miles radius of the project.
   3. Testing Agency's Field Supervisor: Certified by NETA to supervise on-site testing to supervise on-site testing specified in Part 3.

M. Comply with NEMA ICS 1.

N. Comply with NFPA 70.

O. Comply with NFPA 99.

P. Comply with NFPA 110.

Q. Comply with UL 1008 unless requirements of these Specifications are stricter.

1.9 PROJECT CONDITIONS

1.10 COORDINATION

A. Coordinate size and location of concrete bases. Cast anchor-bolt inserts into bases. Concrete, reinforcement, and formwork requirements are specified in Section 033000 "Cast-in-Place Concrete."

PART 2 - PRODUCTS

2.1 MANUFACTURERS

A. Manufacturers: Subject to compliance with requirements, provide products by one of the following manufacturers:
   1. <u>Contactor Transfer Switches:</u>
      a. Russellectric Inc
      b. Emerson; ASCO Power Technologies, LP.
      c. GE Zenith Controls.
      d. Kohler Power Systems; Generator Division.
      e. Onan/Cummins Power Generation; Industrial Business Group.

2.2 GENERAL TRANSFER-SWITCH PRODUCT REQUIREMENTS

A. Indicated Current Ratings: Apply as defined in UL 1008 for continuous loading and total system transfer, including tungsten filament lamp loads not exceeding 30 percent of switch ampere rating, unless otherwise indicated.

B. Tested Fault-Current Closing and Withstand Ratings: Adequate for duty imposed by protective devices at installation locations in Project under the fault conditions indicated, based on testing according to UL 1008.
   1. Where transfer switch includes internal fault-current protection, rating of switch and trip unit combination shall exceed indicated fault-current value at installation location. Verify maximum available fault levels from the Short Circuit and Coordination Study.
   2. Short-time withstand capability for three cycles.

C. Solid-State Controls: Repetitive accuracy of all settings shall be plus or minus 2 percent or better over an operating temperature range of minus 20 to plus 70 deg C.

D. Resistance to Damage by Voltage Transients: Components shall meet or exceed voltage-surge withstand capability requirements when tested according to IEEE C62.41. Components shall meet or exceed voltage-impulse withstand test of NEMA ICS 1.

E. Electrical Operation: Accomplish by a nonfused, momentarily energized solenoid or electric-motor-operated mechanism, mechanically and electrically interlocked in both directions.

F. Switch Characteristics: Designed for continuous-duty repetitive transfer of full-rated current between active power sources.
   1. Limitation: Switches using molded-case switches or circuit breakers or insulated-case circuit-breaker components are not acceptable.
   2. Switch Action: Double throw; mechanically held in both directions.
   3. Contacts: Silver composition or silver alloy for load-current switching. Conventional automatic transfer-switch units, rated 225 A and higher, shall have separate arcing contacts.

G. Service-Rated Transfer Switch:
   1. Comply with UL 869A and UL 489.
   2. Provide terminals for bonding the grounding electrode conductor to the grounded service conductor.
   3. In systems with a neutral, the bonding connection shall be on the neutral bus.
   4. Provide removable link for temporary separation of the service and load grounded conductors.
   5. Surge Protective Device: Service rated.
   6. Ground-Fault Protection: Comply with UL 1008 for **normal and alternative buses**.
   7. Service Disconnecting Means: Externally operated, manual **mechanically** actuated.

H. Neutral Switching. Where four-pole switches are indicated, provide **neutral pole switched simultaneously with phase poles.**

I. Neutral Terminal: Solid and fully rated, unless otherwise indicated.

J. Oversize Neutral: Ampacity and switch rating of neutral path through units indicated for oversize neutral shall be double the nominal rating of circuit in which switch is installed.

K. Heater: Equip switches exposed to outdoor temperatures and humidity, and other units indicated, with an internal heater. Provide thermostat within enclosure to control heater. Thermostat shall be accessible for operator control.

L. Battery Charger: For generator starting batteries.
   1. Float type rated **10** A.
   2. Ammeter to display charging current.
   3. Fused ac inputs and dc outputs.

M. Annunciation, Control, and Programming Interface Components: Devices at transfer switches for communicating with remote programming devices, annunciators, or annunciator and control panels shall have communication capability matched with remote device.

N. Factory Wiring: Train and bundle factory wiring and label, consistent with Shop Drawings, either by color-code or by numbered or lettered wire and cable tape markers at terminations. Color-coding and wire and cable tape markers are specified in Section 260553 "Identification for Electrical Systems."
   1. Designated Terminals: Pressure type, suitable for types and sizes of field wiring indicated.
   2. Power-Terminal Arrangement and Field-Wiring Space: Suitable for top, side, or bottom entrance of feeder conductors as indicated.
   3. Control Wiring: Equipped with lugs suitable for connection to terminal strips.

O. Enclosures: Free standing. general-purpose NEMA 250, Type 3R, complying with NEMA ICS 6 and UL 508, unless otherwise indicated.
   1. Enclosure shall be fabricated from 12 gauge steel and shall be sized to exceed minimum bending space required by UL 1008. Doors shall have hinges and locking handle latch with provision for padlocks.
   2. Contractors field wiring terminating within the enclosure shall comply with NFPA 70. Wires shall be permanently tagged near the terminal at each end with the wire number shown on approved shop drawings.
   3. The enclosure shall be constructed for convenient removal and replacement of contacts, coils, springs and control devices from the front without removal of main power conductors or removal of major components. The enclosure housing the ATS and BP/IS shall be constructed to protect personnel from energized components of the BO/IS during maintenance of the ATS.

2.3 AUTOMATIC TRANSFER SWITCHES

A. Comply with Level 1 equipment according to NFPA 110.

B. Switching Arrangement: Double-throw type, incapable of pauses or intermediate position stops during normal functioning, unless otherwise indicated.

C. Manual Switch Operation: Under load, with door closed and with either or both sources energized. Transfer time is same as for electrical operation. Control circuit automatically disconnects from electrical operator during manual operation.

D. Manual Switch Operation: Unloaded. Control circuit automatically disconnects from electrical operator during manual operation.

E. Signal-Before-Transfer Contacts: A set of normally open/normally closed dry contacts operates in advance of retransfer to normal source. Interval is adjustable from 1 to 30 seconds.

F. Digital Communication Interface: Matched to capability of remote annunciator or annunciator and control panel.

G. Automatic Closed-Transition Transfer Switches: Include the following functions and characteristics:
   1. Fully automatic make-before-break operation.
   2. Load transfer without interruption, through momentary interconnection of both power sources not exceeding 100 ms.
   3. Initiation of No-Interruption Transfer: Controlled by in-phase monitor and sensors confirming both sources are present and acceptable.
      a. Initiation occurs without active control of generator.
      b. Controls ensure that closed-transition load transfer closure occurs only when the 2 sources are within plus or minus 5 electrical degrees maximum, and plus or minus 5 percent maximum voltage difference.
   4. Failure of power source serving load initiates automatic break-before-make transfer.

H. In-Phase Monitor: Factory-wired, internal relay controls transfer so it occurs only when the two sources are synchronized in phase. Relay compares phase relationship and frequency difference between normal and emergency sources and initiates transfer when both sources are within 15 electrical degrees, and only if transfer can be completed within 60 electrical degrees. Transfer is initiated only if both sources are within 2 Hz of nominal frequency and 70 percent or more of nominal voltage.

I. Motor Disconnect and Timing Relay: Controls designate starters so they disconnect motors before transfer and reconnect them selectively at an adjustable time interval after transfer. Control connection to motor starters is through wiring external to automatic transfer switch. Time delay for reconnecting individual motor loads is adjustable between 1 and 60 seconds, and settings are as indicated. Relay contacts handling motor-control circuit inrush and seal currents are rated for actual currents to be encountered.

J. Programmed Neutral Switch Position: Switch operator has a programmed neutral position arranged to provide a midpoint between the two working switch positions, with an intentional, time-controlled pause at midpoint during transfer. Pause is adjustable from 0.5 to 30 seconds minimum and factory set for 0.5 second, unless otherwise indicated. Time delay occurs for both transfer directions. Pause is disabled unless both sources are live.

K. Automatic Transfer-Switch Features:
   1. Undervoltage Sensing for Each Phase of Normal Source: Sense low phase-to-ground voltage on each phase. Pickup voltage shall be adjustable from 85 to 100 percent of

nominal, and dropout voltage is adjustable from 75 to 98 percent of pickup value. Factory set for pickup at 90 percent and dropout at 85 percent.

2. Adjustable Time Delay: For override of normal-source voltage sensing to delay transfer and engine start signals. Adjustable from zero to six seconds, and factory set for one second.
3. Voltage/Frequency Lockout Relay: Prevent premature transfer to generator. Pickup voltage shall be adjustable from 85 to 100 percent of nominal. Factory set for pickup at 90 percent. Pickup frequency shall be adjustable from 90 to 100 percent of nominal. Factory set for pickup at 95 percent.
4. Time Delay for Retransfer to Normal Source: Adjustable from 0 to 30 minutes, and factory set for 10 minutes to automatically defeat delay on loss of voltage or sustained undervoltage of emergency source, provided normal supply has been restored.
5. Test Switch: Simulate normal-source failure.
6. Switch-Position Pilot Lights: Indicate source to which load is connected.
7. Source-Available Indicating Lights: Supervise sources via transfer-switch normal- and emergency-source sensing circuits.
    a. Normal Power Supervision: Green light with nameplate engraved "Normal Source Available."
    b. Emergency Power Supervision: Red light with nameplate engraved "Emergency Source Available."
8. Unassigned Auxiliary Contacts: Two normally open, single-pole, double-throw contacts for each switch position, rated 10 A at 240-V ac.
9. Transfer Override Switch: Overrides automatic retransfer control so automatic transfer switch will remain connected to emergency power source regardless of condition of normal source. Pilot light indicates override status.
10. Engine Starting Contacts: One isolated and normally closed, and one isolated and normally open; rated 10 A at 32-V dc minimum.
11. Engine Shutdown Contacts: Instantaneous; shall initiate shutdown sequence at remote engine-generator controls after retransfer of load to normal source.
12. Engine Shutdown Contacts: Time delay adjustable from zero to five minutes, and factory set for five minutes. Contacts shall initiate shutdown at remote engine-generator controls after retransfer of load to normal source.
13. Engine-Generator Exerciser: Solid-state, programmable-time switch starts engine generator and transfers load to it from normal source for a preset time, then retransfers and shuts down engine after a preset cool-down period. Initiates exercise cycle at preset intervals adjustable from 7 to 30 days. Running periods are adjustable from 10 to 30 minutes. Factory settings are for 7-day exercise cycle, 20-minute running period, and 5-minute cool-down period. Exerciser features include the following:
    a. Exerciser Transfer Selector Switch: Permits selection of exercise with and without load transfer.
    b. Push-button programming control with digital display of settings.
    c. Integral battery operation of time switch when normal control power is not available.

2.4 BYPASS/ISOLATION SWITCHES

A. Comply with requirements for Level 1 equipment according to NFPA 110.

B. Description: Manual type, arranged to select and connect either source of power directly to load, isolating transfer switch from load and from both power sources. Include the following features for each combined automatic transfer switch and bypass/isolation switch:
   1. Means to lock bypass/isolation switch in the position that isolates transfer switch with an arrangement that permits complete electrical testing of transfer switch while isolated. While isolated, interlocks prevent transfer-switch operation, except for testing or maintenance.
   2. Drawout Arrangement for Transfer Switch: Provide physical separation from live parts and accessibility for testing and maintenance operations.
   3. Bypass/Isolation Switch Current, Voltage, Closing, and Short-Circuit Withstand Ratings: Equal to or greater than those of associated automatic transfer switch, and with same phase arrangement and number of poles.
   4. Contact temperatures of bypass/isolation switches shall not exceed those of automatic transfer-switch contacts when they are carrying rated load.
   5. Operability: Constructed so load bypass and transfer-switch isolation can be performed by 1 person in no more than 2 operations in 15 seconds or less.
   6. Legend: Manufacturer's standard legend for control labels and instruction signs shall describe operating instructions.
   7. Maintainability: Fabricate to allow convenient removal of major components from front without removing other parts or main power conductors.

C. Interconnection of Bypass/Isolation Switches with Automatic Transfer Switches: Factory-installed copper bus bars; plated at connection points and braced for the indicated available short-circuit current.

2.5 NONAUTOMATIC TRANSFER SWITCHES

A. Operation: Electrically actuated by push buttons designated "Normal Source" and "Alternate Source." Switch shall be capable of transferring load in either direction with either or both sources energized.

B. Operation: Electrically actuated by push buttons designated "Normal Source" and "Alternate Source." In addition, removable manual handle provides quick-make, quick-break manual-switching action. Switch shall be capable of electrically or manually transferring load in either direction with either or both sources energized. Control circuit disconnects from electrical operator during manual operation.

C. Double-Throw Switching Arrangement: Incapable of pauses or intermediate position stops during switching sequence.

D. Each switch shall be fully rated for the available fault current closing and withstand rating based on available fault current. Verify maximum available fault current from the Short Circuit and Coordination Study.

E. Nonautomatic Transfer-Switch Accessories:
   1. Pilot Lights: Indicate source to which load is connected.
   2. Source-Available Indicating Lights: Supervise sources via transfer-switch normal- and alternate-source sensing circuits.

a. Normal Power Supervision: Green light with nameplate engraved "Normal Source Available."
b. Emergency Power Supervision: Red light with nameplate engraved "Alternate Source Available."

3. Unassigned Auxiliary Contacts: One set of normally closed contacts for each switch position, rated 10 A at 240-V ac.

2.6 REMOTE ANNUNCIATOR SYSTEM

A. Functional Description: Remote annunciator panel shall annunciate conditions for indicated transfer switches. Annunciation shall include the following:
1. Sources available, as defined by actual pickup and dropout settings of transfer-switch controls.
2. Switch position.
3. Switch in test mode.
4. Failure of communication link.
5. Fail to transfer.

B. Annunciator Panel: LED-lamp type with audible signal and silencing switch.
1. Indicating Lights: Grouped for each transfer switch monitored.
2. Label each group, indicating transfer switch it monitors, location of switch, and identity of load it serves.
3. Mounting: Flush, modular, steel cabinet, unless otherwise indicated.
4. Lamp Test: Push-to-test or lamp-test switch on front panel.

2.7 REMOTE ANNUNCIATOR AND CONTROL SYSTEM

A. Functional Description: Include the following functions for indicated transfer switches:
1. Indication of sources available, as defined by actual pickup and dropout settings of transfer-switch controls.
2. Indication of switch position.
3. Indication of switch in test mode.
4. Indication of failure of digital communication link.
5. Key-switch or user-code access to control functions of panel.
6. Control of switch-test initiation.
7. Control of switch operation in either direction.
8. Control of time-delay bypass for transfer to normal source.

B. Malfunction of annunciator, annunciation and control panel, or communication link shall not affect functions of automatic transfer switch. In the event of failure of communication link, automatic transfer switch automatically reverts to stand-alone, self-contained operation. Automatic transfer-switch sensing, controlling, or operating function shall not depend on remote panel for proper operation.

C. Remote Annunciation and Control Panel: Solid-state components. Include the following features:
1. Controls and indicating lights grouped together for each transfer switch.

2. Label each indicating light control group. Indicate transfer switch it controls, location of switch, and load it serves.
3. Digital Communication Capability: Matched to that of transfer switches supervised.
4. Mounting: Flush, modular, steel cabinet, unless otherwise indicated.

2.8 SOURCE QUALITY CONTROL

A. Factory test and inspect components, assembled switches, and associated equipment. Ensure proper operation. Check transfer time and voltage, frequency, and time-delay settings for compliance with specified requirements. Perform dielectric strength test complying with NEMA ICS 1.

PART 3 - EXECUTION

3.1 INSTALLATION

A. Design each fastener and support to carry load indicated by seismic requirements and according to seismic-restraint details. See Section 260548 "Vibration and Seismic Controls for Electrical Systems."

B. Floor-Mounting Switch: Anchor to floor by bolting.
   1. Concrete Bases: 4 inches (100 mm) high, reinforced, with chamfered edges. Extend base no more than 4 inches (100 mm) in all directions beyond the maximum dimensions of switch, unless otherwise indicated or unless required for seismic support. Construct concrete bases according to Section 260529 "Hangers and Supports for Electrical Systems." Comply with requirements for equipment bases and foundations specified in **Section 033000 "Cast-in-Place Concrete." Section 033053 "Miscellaneous Cast-in-Place Concrete."**

C. Annunciator and Control Panel Mounting: Flush in wall, unless otherwise indicated.

D. Identify components according to Section 260553 "Identification for Electrical Systems."

E. Set field-adjustable intervals and delays, relays, and engine exerciser clock.

3.2 CONNECTIONS

A. Wiring to Remote Components: Match type and number of cables and conductors to control and communication requirements of transfer switches as recommended by manufacturer. Increase raceway sizes at no additional cost to Owner if necessary to accommodate required wiring.

B. Ground equipment according to Section 260526 "Grounding and Bonding for Electrical Systems."

C. Connect wiring according to Section 260519 "Low-Voltage Electrical Power Conductors and Cables."

3.3 FIELD QUALITY CONTROL

A. Testing Agency: **Engage** a qualified independent testing and inspecting agency to perform tests and inspections and prepare test reports.

B. Manufacturer's Field Service: Engage a factory-authorized service representative to inspect, test, and adjust components, assemblies, and equipment installations, including connections. Report results in writing.

C. Perform tests and inspections and prepare test reports.
   1. Manufacturer's Field Service: Engage a factory-authorized service representative to inspect components, assemblies, and equipment installation, including connections, and to assist in testing.
   2. After installing equipment and after electrical circuitry has been energized, test for compliance with requirements.
   3. Perform each visual and mechanical inspection and electrical test stated in NETA Acceptance Testing Specification. Certify compliance with test parameters.
   4. Measure insulation resistance phase-to-phase and phase-to-ground with insulation-resistance tester. Include external annunciation and control circuits. Use test voltages and procedure recommended by manufacturer. Comply with manufacturer's specified minimum resistance.
      a. Check for electrical continuity of circuits and for short circuits.
      b. Inspect for physical damage, proper installation and connection, and integrity of barriers, covers, and safety features.
      c. Verify that manual transfer warnings are properly placed.
      d. Perform manual transfer operation.
   5. After energizing circuits, demonstrate interlocking sequence and operational function for each switch at least three times.
      a. Simulate power failures of normal source to automatic transfer switches and of emergency source with normal source available.
      b. Simulate loss of phase-to-ground voltage for each phase of normal source.
      c. Verify time-delay settings.
      d. Verify pickup and dropout voltages by data readout or inspection of control settings.
      e. Test bypass/isolation unit functional modes and related automatic transfer-switch operations.
      f. Perform contact-resistance test across main contacts and correct values exceeding 500 microhms and values for 1 pole deviating by more than 50 percent from other poles.
      g. Verify proper sequence and correct timing of automatic engine starting, transfer time delay, retransfer time delay on restoration of normal power, and engine cool-down and shutdown.
   6. Ground-Fault Tests: Coordinate with testing of ground-fault protective devices for power delivery from both sources.
      a. Verify grounding connections and locations and ratings of sensors.

D. Testing Agency's Tests and Inspections:
   1. After installing equipment and after electrical circuitry has been energized, test for compliance with requirements.
   2. Perform each visual and mechanical inspection and electrical test stated in latest edition of NETA Acceptance Testing Specification. Certify compliance with test parameters.
   3. Measure insulation resistance phase-to-phase and phase-to-ground with insulation-resistance tester. Include external annunciation and control circuits. Use test voltages and procedure recommended by manufacturer. Comply with manufacturer's specified minimum resistance.
      a. Check for electrical continuity of circuits and for short circuits.
      b. Inspect for physical damage, proper installation and connection, and integrity of barriers, covers, and safety features.
      c. Verify that manual transfer warnings are properly placed.
      d. Perform manual transfer operation.
   4. After energizing circuits, demonstrate interlocking sequence and operational function for each switch at least three times.
      a. Simulate power failures of normal source to automatic transfer switches and of emergency source with normal source available.
      b. Simulate loss of phase-to-ground voltage for each phase of normal source.
      c. Verify time-delay settings.
      d. Verify pickup and dropout voltages by data readout or inspection of control settings.
      e. Test bypass/isolation unit functional modes and related automatic transfer-switch operations.
      f. Perform contact-resistance test across main contacts and correct values exceeding 500 microhms and values for 1 pole deviating by more than 50 percent from other poles.
      g. Verify proper sequence and correct timing of automatic engine starting, transfer time delay, retransfer time delay on restoration of normal power, and engine cool-down and shutdown.
   5. Ground-Fault Tests: Coordinate with testing of ground-fault protective devices for power delivery from both sources.
      a. Verify grounding connections and locations and ratings of sensors.

E. Coordinate tests with tests of generator and run them concurrently.

F. Report results of tests and inspections in writing. Record adjustable relay settings and measured insulation and contact resistances and time delays. Attach a label or tag to each tested component indicating satisfactory completion of tests.

G. Remove and replace malfunctioning units and retest as specified above.

H. Infrared Scanning: After Substantial Completion, but not more than 60 days after Final Acceptance, perform an infrared scan of each switch. Remove all access panels so joints and connections are accessible to portable scanner.
   1. Follow-up Infrared Scanning: Perform an additional follow-up infrared scan of each switch 11 months after date of Substantial Completion.
   2. Instrument: Use an infrared scanning device designed to measure temperature or to detect significant deviations from normal values. Provide calibration record for device.

3. Record of Infrared Scanning: Prepare a certified report that identifies switches checked and that describes scanning results. Include notation of deficiencies detected, remedial action taken, and observations after remedial action.

3.4 DEMONSTRATION

A. Engage a factory-authorized service representative to train Owner's maintenance personnel to adjust, operate, and maintain transfer switches and related equipment as specified below. Refer to Section 017900 "Demonstration and Training." Training shall be held on site after the all transfer switches are completely installed, tested and fully functional.

B. Coordinate this training with that for generator equipment.

END OF SECTION 263600

SECTION 264313 - SURGE PROTECTION FOR LOW-VOLTAGE ELECTRICAL POWER CIRCUITS

PART 1 - GENERAL

1.1 RELATED DOCUMENTS

A. Drawings and general provisions of the Contract, including General and Supplementary Conditions and Division 01 Specification Sections, apply to this Section.

1.2 SUMMARY

A. Section includes field-mounted SPDs for low-voltage (120 to 600 V) power distribution and control equipment.

B. Related Requirements:
   1. Section 262413 "Switchboards" for factory-installed SPDs.
   2. Section 262416 "Panelboards" for factory-installed SPDs.

1.3 DEFINITIONS

A. I(nominal): Nominal discharge current.

B. MCOV: Maximum continuous operating voltage.

C. Mode(s), also Modes of Protection: The pair of electrical connections where the VPR applies.

D. MOV: Metal-oxide varistor; an electronic component with a significant non-ohmic current-voltage characteristic.

E. OCPD: Overcurrent protective device.

F. SCCR: Short-circuit current rating.

G. SPD: Surge protective device.

H. VPR: Voltage protection rating.

1.4 ACTION SUBMITTALS

A. Product Data: For each type of product.
   1. Include rated capacities, operating characteristics, electrical characteristics, and furnished specialties and accessories.

2. Product Certificates: For transient voltage surge suppression devices, signed by the product manufacturer certifying compliance with the following standards UL 1449 and UL 1283.
3. Copy of UL Category Code VZCA certification, as a minimum, listing the tested values for VPRs, Inominal ratings, MCOVs, type designations, OCPD requirements, model numbers, system voltages, and modes of protection.

1.5 INFORMATIONAL SUBMITTALS

A. Field quality-control reports. Include the following:
1. Test procedures used.
2. Test results that comply with the requirements.
3. Failed test results and corrective action taken to achieve the requirements.

B. Sample Warranty: For manufacturer's special warranty.

1.6 CLOSEOUT SUBMITTALS

A. Operation and Maintenance Data: For SPDs to include emergency, operation and maintenance manuals.

1.7 QUALITY ASSURANCE

A. If alternate manufacturer of products other than what are specified in this section are submitted, all necessary documents not limited to cut sheets, technical information, test reports from recognized testing labs and factory test reports shall be submitted to the satisfaction of the owner/engineer to ensure quality and conformance to the specifications. Additional testing shall be undertaken if it is concluded by the owner/engineer that the submitted test reports are either insufficient or do not include all tests necessary for product acceptance. The tests shall be conducted by a recognized lab acceptable to the owner/engineer and all tests shall be witnessed by owner’s/engineer’s personnel. All testing procedures and test results shall be satisfactory to the owner/engineer. Contractor shall be responsible for arranging the tests, for transportation, food and lodging for minimum of one owner’s/engineer’s representative to witness the test at the testing lab. Include all costs for the above in the bid.

B. Contractor shall ensure that the manufacturer has a minimum of 15 years experience in the production of Surge Protective Devices (SPDs) similar to the type and size specified in this project.

C. Manufacturer shall have ISO 9001 Certification.

D. Manufacturer shall have ability to readily provide replacement parts for a minimum period of ten (10) years, from the date of completion of the project. Furnish a letter from the manufacturer confirming the availability.

E. Surge Protective Devices (SPDs) shall be assembled at the manufacturer’s own manufacturing facility using its own major components (e.g., trip units) for the assembly. These devices shall be normally carried by the manufacturer as standard catalog items.

F. Provide certified test reports of shake table test done by manufacturer on similar units.

G. Materials and equipment shall be new, modern in design and shall not have been in prior service except as required by factory tests. Controllers shall be manufactured within six months of installation.

H. Source Limitations: Obtain Surge Protective Devices (SPDs), overcurrent protective devices, components, and accessories, within same product category, through one source from a single manufacturer through a local distributor unless otherwise noted.

I. Comply with NFPA 70.

J. Installer Qualifications: An employer of workers qualified as defined in NEMA PB 2.1 and trained in electrical safety as required by NFPA 70E.

K. Product Options: Drawings indicate size, profiles, and dimensional requirements of Surge Protective Devices (SPDs) are based on the specific system indicated. Refer to Part 2 "Product Requirements."

L. Electrical Components, Devices, and Accessories: UL Listed and labeled as defined in NFPA 70, Article 100-and marked for intended location and application.

M. Testing Agency Qualifications: Member of NETA;
   1. Testing agency shall be an independent company; shall have been a member of NETA for a minimum of last ten (10) years and has permanent in-house testing engineers and technicians involved with testing of Surge Protective Devices, OCPDs, switches and breakers similar to those specified on this project.
   2. Testing company shall be located with 50 miles radius of the project.
   3. Testing Agency's Field Supervisor: Currently certified by NETA to supervise on-site testing to supervise on-site testing specified in Part 3.
   4. Field Testing technician and supervisor shall have minimum ten (10) years experience in field testing of Surge Protective Devices (SPDs), OCPDs, switches and circuit breakers similar to the type and rating specified on this project.

1.8 WARRANTY

A. Manufacturer's Warranty: Manufacturer agrees to replace or replace SPDs that fail in materials or workmanship within specified warranty period.
   1. Warranty Period: Five years from date of Substantial Completion.

PART 2 - PRODUCTS

2.1 MANUFACTURERS

A. Manufacturers: Subject to compliance with requirements, **provide products by the following manufacturers:**

1. Schneider Electric Industries SAS
2. Advanced Protection Technologies Inc. (APT).
3. Eaton Corporation.
4. GE Zenith Controls.
5. LEA International; Protection Technology Group.
6. Leviton Manufacturing Co., Inc.
7. PowerLogics, Inc..
8. Siemens Industry, Inc.

2.2 GENERAL SPD REQUIREMENTS

A. SPD with Accessories: UL Listed and labeled as defined in NFPA 70, by a qualified testing agency, and marked for intended location and application.

B. Comply with NFPA 70.

C. Comply with UL 1449 and 1283

D. Comply with ANSI/IEEE C62.41-2002 and C62.5-2002

E. MCOV of the SPD shall be at least **125 percent** of the nominal system voltage.

2.3 SERVICE ENTRANCE **AND TRANSFER SWITCH** SUPPRESSOR

A. SPDs: Comply with UL 1449, **Type 2**.

B. SPDs: Listed and labeled by an NRTL acceptable to authorities having jurisdiction as complying with UL 1449, **Type 2**

C. SPD shall be tested with the ANSI/IEEE Category C_{High} exposure waveform (20kV-1.2/50µs, 10kA-8/20µ.

D. Pulse life test: Capable of protecting against and surviving 20,000 ANSI/IEEE Category C_{High} transients without failure or degradation of clamping voltage by more than 10%.

E. Comply with UL 1283.

F. Peak Surge Current Rating: The minimum single-pulse surge current withstand rating per phase shall not be less than **200 kA**. The peak surge current rating shall be the arithmetic sum of the ratings of the individual MOVs in a given mode.

G. Protection modes and UL 1449 VPR for grounded wye circuits with **208Y/120 V**, three-phase, four-wire circuits shall not exceed the following:
   1. Line to Neutral: 700 V for 208Y/120 V.
   2. Line to Ground: 1200 V for 208Y/120 V.
   3. Line to Line: 1000 V for 208Y/120 V.

H. SCCR: Equal or exceed **200 kA**.

I. I(nominal) Rating: 20 kA.

2.4 PANEL SUPPRESSORS

A. SPDs: Comply with UL 1449, **Type 2**.
   1. Include LED indicator lights for power and protection status.
   2. Internal thermal protection that disconnects the SPD before damaging internal suppressor components.
   3. Include Form-C contacts rated at 5 A and 250-V ac, one normally open and one normally closed, for remote monitoring of protection status.

B. Peak Surge Current Rating: The minimum single-pulse surge current withstand rating per phase shall not be less than **100 kA**. The peak surge current rating shall be the arithmetic sum of the ratings of the individual MOVs in a given mode.

C. Comply with UL 1283.

D. Protection modes and UL 1449 VPR for grounded wye circuits with **208Y/120 V**, three-phase, four-wire circuits shall not exceed the following:
   1. Line to Neutral: 700 V for 208Y/120 V.
   2. Line to Ground: 700 V for 208Y/120 V.
   3. Neutral to Ground: 700 V for 208Y/120 V.
   4. Line to Line: 1200 V for 208Y/120 V

E. SCCR: Equal or exceed **200 kA**.

F. I(nominal) Rating: **20 kA**.

2.5 ENCLOSURES

A. Indoor Enclosures: NEMA 250, Type 1.

B. Outdoor Enclosures: NEMA 250, **Type 3R** Outdoor enclosure shall have temper proof screws and be lockable with a padlock.

2.6 CONDUCTORS AND CABLES

A. Power Wiring: Same size as SPD leads, complying with Section 260519 "Low-Voltage Electrical Power Conductors and Cables."

B. Class 2 Control Cables: Multiconductor cable with copper conductors not smaller than No. 18 AWG, complying with Section 260519 "Low-Voltage Electrical Power Conductors and Cables."

C. Class 1 Control Cables: Multiconductor cable with copper conductors not smaller than No. 14 AWG, complying with Section 260519 "Low-Voltage Electrical Power Conductors and Cables."

PART 3 - EXECUTION

3.1 INSTALLATION

A. Comply with NECA 1.

B. Install an OCPD or disconnect as required to comply with the UL listing of the SPD.

C. Install SPDs with conductors between suppressor and points of attachment as short and straight as possible, and adjust circuit-breaker positions to achieve shortest and straightest leads. Do not splice and extend SPD leads unless specifically permitted by manufacturer. Do not exceed manufacturer's recommended lead length. Do not bond neutral and ground.

D. Use crimped connectors and splices only. Wire nuts are unacceptable.

E. Wiring:
   1. Power Wiring: Comply with wiring methods in Section 260519 "Low-Voltage Electrical Power Conductors and Cables."
   2. Controls: Comply with wiring methods in Section 260519 "Low-Voltage Electrical Power Conductors and Cables."

3.2 FIELD QUALITY CONTROL

A. Perform the following tests and inspections with the assistance of a factory-authorized service representative.
   1. Compare equipment nameplate data for compliance with Drawings and Specifications.
   2. Inspect anchorage, alignment, grounding, and clearances.
   3. Verify that electrical wiring installation complies with manufacturer's written installation requirements.

B. An SPD will be considered defective if it does not pass tests and inspections.

C. Prepare test and inspection reports.

3.3 STARTUP SERVICE

A. Complete startup checks according to manufacturer's written instructions.

B. Do not perform insulation-resistance tests of the distribution wiring equipment with SPDs installed. Disconnect SPDs before conducting insulation-resistance tests, and reconnect them immediately after the testing is over.

C. Energize SPDs after power system has been energized, stabilized, and tested.

3.4 DEMONSTRATION

A. **Engage a factory-authorized service representative to train** Owner's maintenance personnel to operate and maintain SPDs.

END OF SECTION 264313

SECTION 265119 - LED INTERIOR LIGHTING

PART 1 - GENERAL

1.1 RELATED DOCUMENTS

A. Drawings and general provisions of the Contract, including General and Supplementary Conditions and Division 01 Specification Sections, apply to this Section.

1.2 SUMMARY

A. Section includes the following types of LED luminaires:
   1. Downlight.
   2. Linear industrial.
   3. Lowbay.
   4. Recessed, linear.
   5. Strip light.
   6. Surface mount, linear.
   7. Surface mount, nonlinear.
   8. Suspended, linear.
   9. Suspended, nonlinear.

B. Related Requirements:

   1. Section 260943 Network lighting control systems with low-voltage control wiring or data communication circuits.

1.3 DEFINITIONS

A. CCT: Correlated color temperature.

B. CRI: Color Rendering Index.

C. Fixture: See "Luminaire."

D. IP: International Protection or Ingress Protection Rating.

E. LED: Light-emitting diode.

F. Lumen: Measured output of lamp and luminaire, or both.

G. Luminaire: Complete lighting unit, including lamp, reflector, and housing.

1.4 ACTION SUBMITTALS

A. Product Data: For each type of product.
   1. Arrange in order of luminaire designation.
   2. Include data on features, accessories, and finishes.
   3. Include physical description and dimensions of luminaires.
   4. Include emergency lighting units, including batteries and chargers.
   5. Include life, output (lumens, CCT, and CRI), and energy-efficiency data.
   6. Photometric data and adjustment factors based on laboratory tests[, complying with IES "Lighting Measurements Testing and Calculation Guides" for each luminaire type. The adjustment factors shall be for lamps and accessories identical to those indicated for the luminaire as applied in this Project] [IES LM-79] [and] [IES LM-80].
      a. Manufacturers' Certified Data: Photometric data certified by manufacturer's laboratory with a current accreditation under the National Voluntary Laboratory Accreditation Program for Energy Efficient Lighting Products.
      b. Testing Agency Certified Data: For indicated luminaires, photometric data certified by a qualified independent testing agency. Photometric data for remaining luminaires shall be certified by manufacturer.

B. Shop Drawings: For nonstandard or custom luminaires.
   1. Include plans, elevations, sections, and mounting and attachment details.
   2. Include details of luminaire assemblies. Indicate dimensions, weights, loads, required clearances, method of field assembly, components, and location and size of each field connection.
   3. Include diagrams for power, signal, and control wiring.

C. Samples: For each luminaire and for each color and texture with standard factory-applied finish.

D. Samples for Initial Selection: For each type of luminaire with custom factory-applied finishes.
   1. Include Samples of luminaires and accessories involving color and finish selection.

E. Samples for Verification: For each type of luminaire.
   1. Include Samples of luminaires and accessories to verify finish selection.

F. Product Schedule: For luminaires and lamps, refer to light fixture schedule on plans.

1.5 INFORMATIONAL SUBMITTALS

A. Coordination Drawings: Reflected ceiling plan(s) and other details, drawn to scale, on which the following items are shown and coordinated with each other, using input from installers of the items involved:
   1. Luminaires.
   2. Suspended ceiling components.
   3. Partitions and millwork that penetrate the ceiling or extend to within 12 inches of the plane of the luminaires.
   4. Structural members to which **equipment and or**]luminaires will be attached.
   5. Initial access modules for acoustical tile, including size and locations.
   6. Items penetrating finished ceiling, including the following:
      a. Other luminaires.

b. Air outlets and inlets.
c. Speakers.
d. Sprinklers.
e. Access panels.
f. Ceiling-mounted projectors.

7. Moldings.

B. Qualification Data: For testing laboratory providing photometric data for luminaires.

C. Seismic Qualification Data: For luminaires, accessories, and components, from manufacturer.
1. Basis for Certification: Indicate whether withstand certification is based on actual test of assembled components or on calculation.
2. Dimensioned Outline Drawings of Equipment Unit: Identify center of gravity and locate and describe mounting and anchorage provisions.
3. Detailed description of equipment anchorage devices on which the certification is based and their installation requirements.

D. Sample warranty.

1.6 CLOSEOUT SUBMITTALS

A. Operation and Maintenance Data: For luminaires and lighting systems to include in operation and maintenance manuals.
1. Provide a list of all lamp types used on Project; use ANSI and manufacturers' codes.

1.7 MAINTENANCE MATERIAL SUBMITTALS

A. Furnish extra materials that match products installed and that are packaged with protective covering for storage and identified with labels describing contents.
1. Diffusers and Lenses: **One for every 100** of each type and rating installed. Furnish at least one of each type.
2. Globes and Guards: **One for every 20** of each type and rating installed. Furnish at least one of each type.

1.8 QUALITY ASSURANCE

A. Luminaire Photometric Data Testing Laboratory Qualifications: Luminaire manufacturer's laboratory that is accredited under the NVLAP for Energy Efficient Lighting Products.

B. Luminaire Photometric Data Testing Laboratory Qualifications: Provided by an independent agency, with the experience and capability to conduct the testing indicated, that is an NRTL as defined by OSHA in 29 CFR 1910.7, accredited under the NVLAP for Energy Efficient Lighting Products, and complying with the applicable IES testing standards.

C. Provide luminaires from a single manufacturer for each luminaire type.

D. Each luminaire type shall be binned within a [three-step] MacAdam Ellipse to ensure color consistency among luminaires.

E. Mockups: For interior luminaires in room or module mockups, complete with power and control connections.
   1. Obtain Architect's approval of luminaires in mockups before starting installations.
   2. Maintain mockups during construction in an undisturbed condition as a standard for judging the completed Work.
   3. Approval of mockups does not constitute approval of deviations from the Contract Documents contained in mockups unless Architect specifically approves such deviations in writing.
   4. Subject to compliance with requirements, approved mockups may become part of the completed Work if undisturbed at time of Substantial Completion.

1.9 DELIVERY, STORAGE, AND HANDLING

A. Protect finishes of exposed surfaces by applying a strippable, temporary protective covering before shipping.

1.10 WARRANTY

A. Warranty: Manufacturer and Installer agree to repair or replace components of luminaires that fail in materials or workmanship within specified warranty period.

B. Warranty Period: **Five** year(s) from date of Substantial Completion.

PART 2 - PRODUCTS

2.1 REFER TO LIGHT FIXTURE SCHEDULE ON PLANS

2.2 PERFORMANCE REQUIREMENTS

A. Seismic Performance: Luminaires shall withstand the effects of earthquake motions determined according to **ASCE/SEI 7**.

B. Seismic Performance: Luminaires and lamps shall be labeled vibration and shock resistant.
   1. The term "withstand" means "the luminaire will remain in place without separation of any parts when subjected to the seismic forces specified **and the luminaire will be fully operational during and after the seismic event**."

C. Ambient Temperature: **41 to 104 deg F (5 to 40 deg C)**.
   1. Relative Humidity: Zero to 95 percent.

D. Altitude: Sea level to **1000 feet**.

2.3 LUMINAIRE REQUIREMENTS

A. Electrical Components, Devices, and Accessories: Listed and labeled as defined in NFPA 70, by a qualified testing agency, and marked for intended location and application.

B. Factory-Applied Labels: Comply with UL 1598. Include recommended lamps. Locate labels where they will be readily visible to service personnel, but not seen from normal viewing angles when lamps are in place.
   1. Label shall include the following lamp characteristics:
      a. "USE ONLY" and include specific lamp type.
      b. Lamp diameter, shape, size, wattage, and coating.
      c. CCT and CRI.

C. Recessed luminaires shall comply with NEMA LE 4.

D. NRTL Compliance: Luminaires for hazardous locations shall be listed and labeled for indicated class and division of hazard by an NRTL.

E. FM Global Compliance: Luminaires for hazardous locations shall be listed and labeled for indicated class and division of hazard by FM Global.

F. California Title 24 compliant.

2.4 DOWNLIGHT

A. Nominal Operating Voltage: **120 V ac**

B. Lamp:
   1. Minimum allowable efficacy of **80** lm/W.
   2. CRI and CCT as indicated on plans.
   3. Rated lamp life of **50,000** hours to L70.
   4. Dimmable from 100 percent to 0 percent of maximum light output.
   5. Internal driver.
   6. Lens Thickness: At least 0.125-inch minimum unless otherwise indicated.

C. Housings:
   1. **Extruded-aluminum** housing and heat sink.
   2. Clear, anodized, powder-coat finish.
   3. Universal mounting bracket.
   4. Integral junction box with conduit fittings.

D. Doors, Frames, and Other Internal Access: Smooth operating, free of light leakage under operating conditions, and designed to permit relamping without use of tools. Designed to prevent doors, frames, lenses, diffusers, and other components from falling accidentally during relamping and when secured in operating position.

E. Standards:
   1. ENERGY STAR certified.
   2. RoHS compliant.

3. UL Listing: Listed for damp location.
4. Recessed luminaires shall comply with NEMA LE 4.

2.5 LINEAR INDUSTRIAL

A. Lamp:
1. Minimum allowable efficacy of **80** lm/W.
2. CRI and CCT as indicated on plans.
3. Rated lamp life of **50,000** hours to L70.
4. Dimmable from 100 percent to 0 percent of maximum light output.
5. Internal driver.
6. Lens Thickness: At least 0.125-inch minimum unless otherwise indicated.

B. Housings:
1. **Extruded-aluminum** housing and heat sink.
2. Clear, anodized, powder-coat finish.

C. Housing and Heat Sink Rating:
1. Class 1, Division 2 Group(s) **A**.
2. NEMA 4X.
3. IP 54.
4. IP 66.
5. Marine and wet locations.
6. CSA C22.2 No 137.

D. Doors, Frames, and Other Internal Access: Smooth operating, free of light leakage under operating conditions, and designed to permit relamping without use of tools. Components are designed to prevent doors, frames, lenses, diffusers, and other components from falling accidentally during relamping and when secured in operating position.

E. With integral mounting provisions.

F. Standards:
1. ENERGY STAR certified.
2. RoHS compliant.

2.6 LOWBAY

A. Nominal Operating Voltage: **120 V ac**

B. Lamp:
1. Minimum allowable efficacy of **80** lm/W.
2. CRI and CCT as indicated on plans.
3. Rated lamp life of **50,000** hours to L70.
4. Dimmable from 100 percent to 0 percent of maximum light output.
5. Internal driver.
6. Lens Thickness: At least 0.125-inch minimum unless otherwise indicated.

C. Housings:
   1. **Extruded-aluminum** housing and heat sink.
   2. Clear, anodized, powder-coat finish.

D. Doors, Frames, and Other Internal Access: Smooth operating, free of light leakage under operating conditions, and designed to permit relamping without use of tools. Components are designed to prevent doors, frames, lenses, diffusers, and other components from falling accidentally during relamping and when secured in operating position.

E. Standards:
   1. ENERGY STAR certified.
   2. RoHS compliant.
   3. UL Listing: Listed for damp location.

2.7 RECESSED, LINEAR

A. Nominal Operating Voltage: **120 V ac**

B. Lamp:
   1. Minimum allowable efficacy of **80** lm/W.
   2. CRI and CCT as indicated on plans.
   3. Rated lamp life of **50,000** hours to L70.
   4. Dimmable from 100 percent to 0 percent of maximum light output.
   5. Internal driver.
   6. Lens Thickness: At least 0.125-inch minimum unless otherwise indicated.

C. Housings:
   1. **Extruded-aluminum** housing and heat sink.
   2. Clear, anodized, powder-coat finish.
   3. With integral mounting provisions.

D. Doors, Frames, and Other Internal Access: Smooth operating, free of light leakage under operating conditions, and designed to permit relamping without use of tools. Components are designed to prevent doors, frames, lenses, diffusers, and other components from falling accidentally during relamping and when secured in operating position.

E. Standards:
   1. ENERGY STAR certified.
   2. RoHS compliant.
   3. UL Listing: Listed for damp location.
   4. NEMA LE 4.

2.8 STRIP LIGHT

A. Nominal Operating Voltage: **120 V ac**

B. Lamp:
   1. Minimum allowable efficacy of **80** lm/W.

2. CRI and CCT as indicated on plans.
3. Rated lamp life of **50,000** hours to L70.
4. Dimmable from 100 percent to 0 percent of maximum light output.
5. Internal driver.
6. Lens Thickness: At least 0.125-inch minimum unless otherwise indicated.

C. Housings:
1. **Extruded-aluminum** housing and heat sink.
2. Clear, anodized, powder-coat finish.
3. With integral mounting provisions.

D. Doors, Frames, and Other Internal Access: Smooth operating, free of light leakage under operating conditions, and designed to permit relamping of luminaire without use of tools. Components are designed to prevent doors, frames, lenses, diffusers, and other components from falling accidentally during relamping and when secured in operating position.

E. Standards:
1. ENERGY STAR certified.
2. RoHS compliant.
3. UL Listing: Listed for damp location.

2.9 SURFACE MOUNT, LINEAR

A. Nominal Operating Voltage: **120 V ac**

B. Lamp:
1. Minimum allowable efficacy of **80** lm/W.
2. CRI and CCT as indicated on plans.
3. Rated lamp life of **50,000** hours to L70.
4. Dimmable from 100 percent to 0 percent of maximum light output.
5. Internal driver.
6. Lens Thickness: At least 0.125-inch minimum unless otherwise indicated.

C. Housings:
1. **Extruded-aluminum** housing and heat sink.
2. Clear, anodized, powder-coat finish.
3. With integral mounting provisions.

D. Doors, Frames, and Other Internal Access: Smooth operating, free of light leakage under operating conditions, and designed to permit relamping without use of tools. Components are designed to prevent doors, frames, lenses, diffusers, and other components from falling accidentally during relamping and when secured in operating position.

E. Standards:
1. ENERGY STAR certified.
2. RoHS compliant.
3. UL Listing: Listed for damp location.

2.10 SURFACE MOUNT, NONLINEAR

A. Nominal Operating Voltage: **120 V ac**

B. Lamp:
1. Minimum allowable efficacy of **80** lm/W.
2. CRI and CCT as indicated on plans.
3. Rated lamp life of **50,000** hours to L70.
4. Dimmable from 100 percent to 0 percent of maximum light output.
5. Internal driver.
6. Lens Thickness: At least 0.125-inch minimum unless otherwise indicated.

C. Housings:
1. **Extruded-aluminum** housing and heat sink.
2. Clear, anodized, powder-coat finish.
3. With integral mounting provisions.

D. Doors, Frames, and Other Internal Access: Smooth operating, free of light leakage under operating conditions, and designed to permit relamping without use of tools. Components are designed to prevent doors, frames, lenses, diffusers, and other components from falling accidentally during relamping and when secured in operating position.

E. Standards:
1. ENERGY STAR certified.
2. RoHS compliant.
3. UL Listing: Listed for damp location.

2.11 SUSPENDED, LINEAR

A. Nominal Operating Voltage: **120 V ac**

B. Lamp:
1. Minimum allowable efficacy of **80** lm/W.
2. CRI and CCT as indicated on plans.
3. Rated lamp life of **50,000** hours to L70.
4. Dimmable from 100 percent to 0 percent of maximum light output.
5. Internal driver.
6. Lens Thickness: At least 0.125-inch minimum unless otherwise indicated.

C. Housings:
1. **Extruded-aluminum** housing and heat sink.
2. Clear, anodized, powder-coat finish.
3. With integral mounting provisions.

D. Doors, Frames, and Other Internal Access: Smooth operating, free of light leakage under operating conditions, and designed to permit relamping without use of tools. Components are designed to prevent doors, frames, lenses, diffusers, and other components from falling accidentally during relamping and when secured in operating position.

E. Standards:
   1. ENERGY STAR certified.
   2. RoHS compliant.
   3. UL Listing: Listed for damp location.

2.12 SUSPENDED, NONLINEAR

A. Nominal Operating Voltage: **120 V ac**

B. Lamp:
   1. Minimum allowable efficacy of **80** lm/W.
   2. CRI and CCT as indicated on plans.
   3. Rated lamp life of **50,000** hours to L70.
   4. Dimmable from 100 percent to 0 percent of maximum light output.
   5. Internal driver.
   6. Lens Thickness: At least 0.125-inch minimum unless otherwise indicated.

C. Housings:
   1. **Extruded-aluminum** housing and heat sink.
   2. Clear, anodized, powder-coat finish.
   3. Universal mounting bracket.
   4. Integral junction box with conduit fittings.

D. Doors, Frames, and Other Internal Access: Smooth operating, free of light leakage under operating conditions, and designed to permit relamping without use of tools. Components are designed to prevent doors, frames, lenses, diffusers, and other components from falling accidentally during relamping and when secured in operating position.

E. Standards:
   1. ENERGY STAR certified.
   2. RoHS compliant.
   3. UL Listing: Listed for damp location.

2.13 MATERIALS

A. Metal Parts:
   1. Free of burrs and sharp corners and edges.
   2. Sheet metal components shall be steel unless otherwise indicated.
   3. Form and support to prevent warping and sagging.

B. Steel:
   1. ASTM A 36/A 36M for carbon structural steel.
   2. ASTM A 568/A 568M for sheet steel.

C. Stainless Steel:
   1. 1. Manufacturer's standard grade.
   2. 2. Manufacturer's standard type, ASTM A 240/240 M.

D. Galvanized Steel: ASTM A 653/A 653M.

E. Aluminum: ASTM B 209.

2.14 METAL FINISHES

A. Variations in finishes are unacceptable in the same piece. Variations in finishes of adjoining components are acceptable if they are within the range of approved Samples and if they can be and are assembled or installed to minimize contrast.

2.15 LUMINAIRE SUPPORT

A. Comply with requirements in Section 260529 "Hangers and Supports for Electrical Systems" for channel and angle iron supports and nonmetallic channel and angle supports.

B. Single-Stem Hangers: 1/2-inch steel tubing with swivel ball fittings and ceiling canopy. Finish same as luminaire.

C. Wires: ASTM A 641/A 641 M, Class 3, soft temper, zinc-coated steel, **12 gage**.

D. Rod Hangers: 3/16-inch minimum diameter, cadmium-plated, threaded steel rod.

E. Hook Hangers: Integrated assembly matched to luminaire, line voltage, and equipment with threaded attachment, cord, and locking-type plug.

PART 3 - EXECUTION

3.1 EXAMINATION

A. Examine substrates, areas, and conditions, with Installer present, for compliance with requirements for installation tolerances and other conditions affecting performance of the Work.

B. Examine roughing-in for luminaire to verify actual locations of luminaire and electrical connections before luminaire installation.

C. Proceed with installation only after unsatisfactory conditions have been corrected.

3.2 TEMPORARY LIGHTING

A. If approved by the Architect, use selected permanent luminaires for temporary lighting. When construction is sufficiently complete, clean luminaires used for temporary lighting and install new lamps.

3.3 INSTALLATION

A. Comply with NECA 1.

B. Install luminaires level, plumb, and square with ceilings and walls unless otherwise indicated.

C. Install lamps in each luminaire.

D. Supports:
   1. Sized and rated for luminaire weight.
   2. Able to maintain luminaire position after cleaning and relamping.
   3. Provide support for luminaire without causing deflection of ceiling or wall.
   4. Luminaire-mounting devices shall be capable of supporting a horizontal force of 100 percent of luminaire weight and a vertical force of 400 percent of luminaire weight.

E. Flush-Mounted Luminaires:
   1. Secured to outlet box.
   2. Attached to ceiling structural members at four points equally spaced around circumference of luminaire.
   3. Trim ring flush with finished surface.

F. Wall-Mounted Luminaires:
   1. [Attached to structural members in walls] [Attached to a minimum 20 gauge backing plate attached to wall structural members] [Attached using through bolts and backing plates on either side of wall] <Insert means of attachment>.
   2. Do not attach luminaires directly to gypsum board.

G. Suspended Luminaires:
   1. Ceiling Mount:
      a. **Two** 5/32-inch diameter aircraft cable supports **adjustable to 10 feet in length**.
      b. Pendant mount with **5/32-inch**]diameter aircraft cable supports adjustable to **10 feet** in length.
      c. Hook mount.
   2. Pendants and Rods: Where longer than 24 inches, brace to limit swinging.
   3. Stem-Mounted, Single-Unit Luminaires: Suspend with twin-stem hangers. Support with approved outlet box and accessories that hold stem and provide damping of luminaire oscillations. Support outlet box vertically to building structure using approved devices.
   4. Continuous Rows of Luminaires: Use tubing or stem for wiring at one point and **tubing or rod wire support** for suspension for each unit length of luminaire chassis, including one at each end.
   5. Do not use ceiling grid as support for pendant luminaires. Connect support wires or rods to building structure.

H. Ceiling-Grid-Mounted Luminaires:
   1. Secure to any required outlet box.
   2. Secure luminaire to the luminaire opening using approved fasteners in a minimum of four locations, spaced near corners of luminaire.
   3. Use approved devices and support components to connect luminaire to ceiling grid and building structure in a minimum of four locations, spaced near corners of luminaire.

I. Comply with requirements in Section 260519 "Low-Voltage Electrical Power Conductors and Cables" for wiring connections.

3.4 IDENTIFICATION

A. Identify system components, wiring, cabling, and terminals. Comply with requirements for identification specified in Section 260553 "Identification for Electrical Systems."

3.5 FIELD QUALITY CONTROL

A. Perform the following tests and inspections:
   1. Operational Test: After installing luminaires, switches, and accessories, and after electrical circuitry has been energized, test units to confirm proper operation.
   2. Test for Emergency Lighting: Interrupt power supply to demonstrate proper operation. Verify transfer from normal power to battery power and retransfer to normal.

B. Luminaire will be considered defective if it does not pass operation tests and inspections.

C. Prepare test and inspection reports.

3.6 STARTUP SERVICE

A. Comply with requirements for startup specified in Section 260943.16 "Addressable-Luminaire Lighting Controls."

B. Comply with requirements for startup specified in Section 260943.23 "Relay-Based Lighting Controls."

3.7 ADJUSTING

A. Occupancy Adjustments: When requested within [**12**] months of date of Substantial Completion, provide on-site assistance in adjusting the direction of aim of luminaires to suit occupied conditions. Make up to [**two**] visits to Project during other-than-normal hours for this purpose. Some of this work may be required during hours of darkness.
   1. During adjustment visits, inspect all luminaires. Replace lamps or luminaires that are defective.
   2. Parts and supplies shall be manufacturer's authorized replacement parts and supplies.
   3. Adjust the aim of luminaires in the presence of the Architect.

END OF SECTION 265119

SECTION 265619 – LED EXTERIOR LIGHTING

PART 1 - GENERAL

1.1 RELATED DOCUMENTS

A. Drawings and general provisions of the Contract, including General and Supplementary Conditions and Division 01 Specification Sections, apply to this Section.

1.2 SUMMARY

A. Section Includes:
1. Exterior solid-state luminaires that are designed for and exclusively use LED lamp technology.
2. Luminaire supports.
3. Luminaire-mounted photoelectric relays.

B. Related Requirements:
1. Section 260943 Programmable lighting control systems with low-voltage control wiring or data communication circuits.

1.3 DEFINITIONS

A. CCT: Correlated color temperature.

B. CRI: Color rendering index.

C. Fixture: See "Luminaire."

D. IP: International Protection or Ingress Protection Rating.

E. Lumen: Measured output of lamp and luminaire, or both.

F. Luminaire: Complete lighting unit, including lamp, reflector, and housing.

1.4 ACTION SUBMITTALS

A. Product Data: For each type of luminaire.
1. Arrange in order of luminaire designation.
2. Include data on features, accessories, and finishes.
3. Include physical description and dimensions of luminaire.
4. Lamps, include life, output (lumens, CCT, and CRI), and energy-efficiency data.
5. Photometric data and adjustment factors based on laboratory tests, complying with IES Lighting Measurements Testing and Calculation Guides, of each luminaire type. The adjustment factors shall be for lamps and accessories identical to those indicated for the luminaire as applied in this Project and testing procedures and criteria required by IES LM-79 and LM-80.

a. Manufacturer's Certified Data: Photometric data certified by manufacturer's laboratory with a current accreditation under the NVLAP for Energy Efficient Lighting Products.
b. Testing Agency Certified Data: For indicated luminaires, photometric data certified by a qualified independent testing agency. Photometric data for remaining luminaires shall be certified by manufacturer.

6. Wiring diagrams for power, control, and signal wiring.
7. Photoelectric relays.
8. Means of attaching luminaires to supports and indication that the attachment is suitable for components involved.

B. Shop Drawings: For nonstandard or custom luminaires.
1. Include plans, elevations, sections, and mounting and attachment details.
2. Include details of luminaire assemblies. Indicate dimensions, weights, loads, required clearances, method of field assembly, components, and location and size of each field connection.
3. Include diagrams for power, signal, and control wiring.

C. Sustainable Design Submittals:
1. "BUG ratings" Light Pollution Reduction for both uplight and light trespass.

PART 2 - PRODUCT DATA: INDICATING LUMINAIRE IS CERTIFIED BY **[ENERGY STAR] [DESIGN LIGHTS CONSORTIUM]**.

A. Samples: For each luminaire and for each color and texture indicated with factory-applied finish.

B. Product Schedule: For luminaires and lamps. Use same designations indicated on Drawings.

C. Delegated-Design Submittal: For luminaire supports.
1. Include design calculations for luminaire supports and seismic restraints.

2.2 INFORMATIONAL SUBMITTALS

A. Coordination Drawings: Plans, drawn to scale, on which the following items are shown and coordinated with each other, using input from installers of the items involved:
1. Luminaires.
2. Structural members to which equipment and luminaires will be attached.
3. Underground utilities and structures.
4. Existing underground utilities and structures.
5. Above-grade utilities and structures.
6. Existing above-grade utilities and structures.
7. Building features.
8. Vertical and horizontal information.

B. Qualification Data: For testing laboratory providing photometric data for luminaires.

C. Seismic Qualification Data: For luminaires, accessories, and components, from manufacturer.
   1. Basis for Certification: Indicate whether withstand certification is based on actual test of assembled components or on calculation.
   2. Dimensioned Outline Drawings of Equipment Unit: Identify center of gravity and locate and describe mounting and anchorage provisions.
   3. Detailed description of equipment anchorage devices on which the certification is based and their installation requirements.

D. Product Certificates: For each type of the following:
   1. Luminaire.
   2. Photoelectric relay.

E. Test reports complying with LM-79 (IES approved method for electrical and photometric measurements of Solid-State Lighting) providing total luminous flux, luminous intensity distribution, electrical power characteristics, luminous efficacy and color characteristics (CRI, CCT) shall be submitted.Test reports complying with LM-80 (IES approved standard for measuring lumen maintenance of LED light sources) providing lumen maintenance of LED light sources shall be submitted.

F. ISTMT (IN SITU TEMPERATATURE MEASUREMENT TEST) – It is the measure of the LED source case temperature within the LED system (luminaire or lamp or it is the temperature of the LED within the luminaire. This measurement should be performed according to the temperature measurement point (TMP) indicated by the particular LED package manufacturer. The temperature measured within the luminaire shall be within the temperature of the LM-80-08 LED source report.

G. All LED lifetime projections shall be made per TM-21-11 (approved method for taking LM-80 data and making useful LED lifetime projections).

H. Product Test Reports: For each luminaire, for tests performed by manufacturer and witnessed by a qualified testing agency as follows:
   1. Test reports complying with LM-79 (IES approved method for electrical and photometric measurements of Solid-State Lighting) providing total luminous flux, luminous intensity distribution, electrical power characteristics, luminous efficacy and color characteristics (CRI, CCT) shall be submitted.
   2. Test reports complying with LM-80 (IES approved standard for measuring lumen maintenance of LED light sources) providing lumen maintenance of LED light sources shall be submitted.
   3. ISTMT (IN SITU TEMPERATATURE MEASUREMENT TEST) – It is the measure of the LED source case temperature within the LED system (luminaire or lamp or it is the temperature of the LED within the luminaire. This measurement should be performed according to the temperature measurement point (TMP) indicated by the particular LED package manufacturer. The temperature measured within the luminaire shall be within the temperature of the LM-80-08 LED source report.
   4. All LED lifetime projections shall be made per TM-21-11 (approved method for taking LM-80 data and making useful LED lifetime projections).

I. Source quality-control reports.

J. Sample warranty.

2.3 CLOSEOUT SUBMITTALS

A. Operation and Maintenance Data: For luminaires **and photoelectric relays** to include in operation and maintenance manuals.
   1. Provide a list of all lamp types used on Project. Use ANSI and manufacturers' codes.
   2. Provide a list of all photoelectric relay types used on Project; use manufacturers' codes.

2.4 MAINTENANCE MATERIAL SUBMITTALS

A. Furnish extra materials that match products installed and that are packaged with protective covering for storage and identified with labels describing contents.
   1. Lamps: [**Ten for every 100**] of each type and rating installed. Furnish at least one of each type.
   2. Glass, Acrylic, and Plastic Lenses, Covers, and Other Optical Parts: [**One for every 100**] of each type and rating installed. Furnish at least one of each type.
   3. Diffusers and Lenses: [**One for every 100**] of each type and rating installed. Furnish at least one of each type.
   4. Globes and Guards: [**One for every 20**] of each type and rating installed. Furnish at least one of each type.

2.5 QUALITY ASSURANCE

A. Luminaire Photometric Data Testing Laboratory Qualifications: Luminaire manufacturers' laboratory that is accredited under the NVLAP for Energy Efficient Lighting Products.

B. Luminaire Photometric Data Testing Laboratory Qualifications: Provided by an independent agency, with the experience and capability to conduct the testing indicated, that is an NRTL as defined by OSHA in 29 CFR 1910.7, accredited under the NVLAP for Energy Efficient Lighting Products and complying with applicable IES testing standards.

C. Provide luminaires from a single manufacturer for each luminaire type.

D. Each luminaire type shall be binned within a three-step MacAdam Ellipse to ensure color consistency among luminaires.

E. Installer Qualifications: An authorized representative who is trained and approved by manufacturer.

F. Mockups: For exterior luminaires, complete with power and control connections.
   1. Obtain Architect's approval of luminaires in mockups before starting installations.
   2. Maintain mockups during construction in an undisturbed condition as a standard for judging the completed work.
   3. Approval of mockups does not constitute approval of deviations from the Contract Documents contained in mockups unless Architect specifically approves such deviations in writing.
   4. Subject to compliance with requirements, approved mockups may become part of the completed Work if undisturbed at time of Substantial Completion.

2.6 DELIVERY, STORAGE, AND HANDLING

A. Protect finishes of exposed surfaces by applying a strippable, temporary protective covering prior to shipping.

2.7 FIELD CONDITIONS

A. Verify existing and proposed utility structures prior to the start of work associated with luminaire installation.

B. Mark locations of exterior luminaires for approval by Architect prior to the start of luminaire installation.

2.8 WARRANTY

A. Warranty: Manufacturer and Installer agree to repair or replace components of luminaires that fail in materials or workmanship within specified warranty period.
   1. Failures include, but are not limited to, the following:
      a. Structural failures, including luminaire support components.
      b. Faulty operation of luminaires and accessories.
      c. Deterioration of metals, metal finishes, and other materials beyond normal weathering.
   2. Warranty Period: 5-years from date of Substantial Completion.

PART 3 - PRODUCTS

3.1 PERFORMANCE REQUIREMENTS

A. Seismic Performance: Luminaires shall withstand the effects of earthquake motions determined according to [**ASCE/SEI 7**].

B. Seismic Performance: Luminaires and lamps shall be labeled vibration and shock resistant.
   1. The term "withstand" means "the luminaire will remain in place without separation of any parts when subjected to the seismic forces specified and the luminaire will be fully operational during and after the seismic event."

3.2 LUMINAIRE REQUIREMENTS

A. Electrical Components, Devices, and Accessories: Listed and labeled as defined in NFPA 70, by a qualified testing agency, and marked for intended location and application.

B. NRTL Compliance: Luminaires shall be listed and labeled for indicated class and division of hazard by an NRTL.

C. FM Global Compliance: Luminaires for hazardous locations shall be listed and labeled for indicated class and division of hazard by FM Global.

D. UL Compliance: Comply with UL 1598 and listed for wet location.

E. Lamp base complying with [**ANSI C81.61**]

F. Bulb shape complying with ANSI C79.1.

G. CRI of minimum 80. CCT as indicated on plans.

H. L70 lamp life of 50,000 hours.

I. Lamps dimmable from 100 percent to 0 percent of maximum light output.

J. Internal driver.

K. Nominal Operating Voltage: **120 V ac**.

L. In-line Fusing: On the primary for each luminaire] [Separate in-line fuse for each luminaire.

M. Lamp Rating: Lamp marked for outdoor use and in enclosed locations.

N. Source Limitations: Obtain luminaires from single source from a single manufacturer.

O. Source Limitations: For luminaires, obtain each color, grade, finish, type, and variety of luminaire from single source with resources to provide products of consistent quality in appearance and physical properties.

3.3 LUMINAIRE-MOUNTED PHOTOELECTRIC RELAYS

A. Comply with UL 773 or UL 773A.

B. Contact Relays: Factory mounted, single throw, designed to fail in the on position, and factory set to turn light unit on at 1.5 to 3 fc and off at 4.5 to 10 fc with 15-second minimum time delay. Relay shall have directional lens in front of photocell to prevent artificial light sources from causing false turnoff.
   1. Relay with locking-type receptacle shall comply with ANSI C136.10.
   2. Adjustable window slide for adjusting on-off set points.

3.4 LUMINAIRE TYPES

A. Area and Site:
   1. Luminaire Shape: Round or Square
   2. Mounting: Pole or Building with stainless-steel rectangular or round arm.
   3. Luminaire-Mounting Height: See plans.
   4. Distribution: See plans.
   5. Diffusers and Globes: [Tempered Fresnel glass] [Prismatic glass] [Diffuse glass] [Clear glass] [Prismatic acrylic] [Clear, UV-stabilized acrylic] [Clear polycarbonate]
   6. Housings:
      a. **Extruded-aluminum** housing and heat sink.
      b. Clear, anodized, powder-coat, finish. Verify with Architect

B. Bollard:
   1. Shape: Round or Square as indicated on plans.
   2. Height Above Finished Grade: See plans.
   3. Overall Height: See plans
   4. Diameter: See plans.
   5. Mounting: See plans.
   6. Distribution: See plans.
   7. Diffusers and Globes: See plans
   8. Housings:
      a. **Extruded-aluminum** housing and heat sink.
      b. Clear, anodized, powder-coat, finish. Verify with Architect

C. Canopy:
   1. Shape: Round or Square as indicated on plans.
   2. Dimensions: See plans.
   3. Diffusers and Globes: See plans.
   4. Housings:
      a. **Extruded-aluminum** housing and heat sink.
      b. Clear, anodized, powder-coat, finish. Verify with Architect

D. Decorative Post Top:
   1. Luminaire-Mounting Height: See plans.
   2. Mounting Type: See plans.
   3. Distribution: See plans.
   4. Diffusers and Globes: See plans.
   5. Housings:
      a. **Extruded-aluminum** housing and heat sink.
      b. Clear, anodized, powder-coat, finish. Verify with Architect

3.5 MATERIALS

A. Metal Parts: Free of burrs and sharp corners and edges.

B. Sheet Metal Components: Stainless steel. Form and support to prevent warping and sagging.

C. Doors, Frames, and Other Internal Access: Smooth operating, free of light leakage under operating conditions, and designed to permit relamping without use of tools. Designed to prevent doors, frames, lenses, diffusers, and other components from falling accidentally during relamping and when secured in operating position. Doors shall be removable for cleaning or replacing lenses.

D. Diffusers and Globes:
   1. Acrylic Diffusers: 100 percent virgin acrylic plastic, with high resistance to yellowing and other changes due to aging, exposure to heat, and UV radiation.
   2. Glass: Annealed crystal glass unless otherwise indicated.
   3. Lens Thickness: At least 0.125 inch minimum unless otherwise indicated.

E. Lens and Refractor Gaskets: Use heat- and aging-resistant resilient gaskets to seal and cushion lenses and refractors in luminaire doors.

F. Reflecting surfaces shall have minimum reflectance as follows unless otherwise indicated:
   1. White Surfaces: 85 percent.
   2. Specular Surfaces: 83 percent.
   3. Diffusing Specular Surfaces: 75 percent.

G. Housings:
   1. Rigidly formed, weather- and light-tight enclosure that will not warp, sag, or deform in use.
   2. Provide filter/breather for enclosed luminaires.

H. Factory-Applied Labels: Comply with UL 1598. Include recommended lamps. Labels shall be located where they will be readily visible to service personnel, but not seen from normal viewing angles when lamps are in place.
   1. Label shall include the following lamp characteristics:
      a. "USE ONLY" and include specific lamp type.
      b. Lamp diameter, shape, size, wattage and coating.
      c. CCT and CRI for all luminaires.

3.6 FINISHES

A. Variations in Finishes: Noticeable variations in same piece are unacceptable. Variations in appearance of adjoining components are acceptable if they are within the range of approved Samples and are assembled or installed to minimize contrast.

B. Luminaire Finish: Manufacturer's standard paint applied to factory-assembled and -tested luminaire before shipping. Where indicated, match finish process and color of pole or support materials.

C. Factory-Applied Finish for Aluminum Luminaires: Comply with NAAMM's "Metal Finishes Manual for Architectural and Metal Products" for recommendations for applying and designating finishes.
   1. Finish designations prefixed by AA comply with the system established by the Aluminum Association for designating aluminum finishes.
   2. Natural Satin Finish: Provide fine, directional, medium satin polish (AA-M32); buff complying with AA-M20 requirements; and seal aluminum surfaces with clear, hard-coat wax.
   3. Class I, Clear-Anodic Finish: AA-M32C22A41 (Mechanical Finish: Medium satin; Chemical Finish: Etched, medium matte; Anodic Coating: Architectural Class I, clear coating 0.018 mm or thicker) complying with AAMA 611.
   4. Class I, Color-Anodic Finish: AA-M32C22A42/A44 (Mechanical Finish: Medium satin; Chemical Finish: Etched, medium matte; Anodic Coating: Architectural Class I, integrally colored or electrolytically deposited color coating 0.018 mm or thicker), complying with AAMA 611.
      a. Color: [Light bronze] [Medium bronze] [Dark bronze] [Black] [Insert color].

D. Factory-Applied Finish for Steel Luminaires: Comply with NAAMM's "Metal Finishes Manual for Architectural and Metal Products" for recommendations for applying and designating finishes.

1. Surface Preparation: Clean surfaces to comply with SSPC-SP 1, to remove dirt, oil, grease, and other contaminants that could impair paint bond. Grind welds and polish surfaces to a smooth, even finish. Remove mill scale and rust, if present, from uncoated steel, complying with SSPC-SP 5/NACE No. 1 or SSPC-SP 8.
2. Exterior Surfaces: Manufacturer's standard finish consisting of one or more coats of primer and two finish coats of high-gloss, high-build polyurethane enamel.
   a. Color: See plans, or as selected by Architect.

3.7 LUMINAIRE SUPPORT COMPONENTS

A. Comply with requirements in Section 260529 "Hangers and Supports for Electrical Systems" for channel and angle iron supports and nonmetallic channel and angle supports.

PART 4 - EXECUTION

4.1 EXAMINATION

A. Examine substrates, areas, and conditions, with Installer present, for compliance with requirements for installation tolerances and other conditions affecting performance of the Work.

B. Examine roughing-in for luminaire electrical conduit to verify actual locations of conduit connections before luminaire installation.

C. Examine walls, roofs, ceilings for suitable conditions where luminaires will be installed.

D. Proceed with installation only after unsatisfactory conditions have been corrected.

4.2 TEMPORARY LIGHTING

A. If approved by the Architect, use selected permanent luminaires for temporary lighting. When construction is substantially complete, clean luminaires used for temporary lighting and install new lamps.

4.3 GENERAL INSTALLATION REQUIREMENTS

A. Comply with NECA 1.

B. Use fastening methods and materials selected to resist seismic forces defined for the application and approved by manufacturer.

C. Install lamps in each luminaire.

D. Fasten luminaire to structural support.

E. Supports:
   1. Sized and rated for luminaire weight.

2. Able to maintain luminaire position after cleaning and relamping.
3. Support luminaires without causing deflection of finished surface.
4. Luminaire-mounting devices shall be capable of supporting a horizontal force of 100 percent of luminaire weight and a vertical force of 400 percent of luminaire weight.

F. Wall-Mounted Luminaire Support:
1. [Attached to structural members in walls] [Attached to a minimum **1/8 inch** backing plate attached to wall structural members] [Attached using through bolts and backing plates on either side of wall].

G. Wiring Method: Install cables in raceways. Conceal raceways and cables.

H. Install luminaires level, plumb, and square with finished grade unless otherwise indicated. Install luminaires at height and aiming angle as indicated on Drawings.

I. Coordinate layout and installation of luminaires with other construction.

J. Adjust luminaires that require field adjustment or aiming. Include adjustment of photoelectric device to prevent false operation of relay by artificial light sources, favoring a north orientation.

K. Comply with requirements in Section 260519 "Low-Voltage Electrical Power Conductors and Cables" and Section 260533 "Raceways and Boxes for Electrical Systems" for wiring connections and wiring methods.

4.4 BOLLARD LUMINAIRE INSTALLATION:

A. Align units for optimum directional alignment of light distribution.
1. Install on concrete base. See plans for additional information. Cast conduit into base, and shape base to match shape of bollard base. Finish by troweling and rubbing smooth. Concrete materials, installation, and finishing are specified in Section 033000 "Cast-in-Place Concrete."

B. Aluminum: Do not use in contact with earth or concrete. When in direct contact with a dissimilar metal, protect aluminum by insulating fittings or treatment.

C. Steel Conduits: Comply with Section 260533 "Raceways and Boxes for Electrical Systems." In concrete foundations, wrap conduit with 0.010-inch thick, pipe-wrapping plastic tape applied with a 50 percent overlap.

4.5 IDENTIFICATION

A. Identify system components, wiring, cabling, and terminals. Comply with requirements for identification specified in Section 260553 "Identification for Electrical Systems."

4.6 FIELD QUALITY CONTROL

A. Inspect each installed luminaire for damage. Replace damaged luminaires and components.

B. Perform the following tests and inspections with the assistance of a factory-authorized service representative:
   1. Operational Test: After installing luminaires, switches, and accessories, and after electrical circuitry has been energized, test units to confirm proper operation.
   2. Verify operation of photoelectric controls.

C. Illumination Tests:
   1. Measure light intensities at night. Use photometers with calibration referenced to NIST standards. Comply with the following IES testing guide(s):
      a. IES LM-5.
      b. IES LM-50.
      c. IES LM-52.
      d. IES LM-64.
      e. IES LM-72.
   2. Operational Test: After installing luminaires, switches, and accessories, and after electrical circuitry has been energized, test units to confirm proper operation.

D. Luminaire will be considered defective if it does not pass tests and inspections.

E. Prepare a written report of tests, inspections, observations, and verifications indicating and interpreting results. If adjustments are made to lighting system, retest to demonstrate compliance with standards.

4.7 DEMONSTRATION

A. Engage a factory-authorized service representative to train Owner's maintenance personnel to adjust, operate, and maintain luminaires and photocell relays.

4.8 ADJUSTING

A. Occupancy Adjustments: When requested within **12** months of date of Substantial Completion, provide on-site assistance in adjusting the direction of aim of luminaires to suit occupied conditions. Make up to [**two**] visits to Project during other-than-normal hours for this purpose. Some of this work may be required during hours of darkness.
   1. During adjustment visits, inspect all luminaires. Replace lamps or luminaires that are defective.
   2. Parts and supplies shall be manufacturer's authorized replacement parts and supplies.
   3. Adjust the aim of luminaires in the presence of the Architect.

END OF SECTION 265619

SECTION 270500 – GENERAL REQUIREMENTS FOR COMMUNICATIONS INSTALLATIONS

PART 1 - GENERAL

1.1 SUMMARY

A. Section Includes:
1. Provide a standard defining the structured communications cabling systems to be installed within the customer facility.
2. Scope of Work Compliance.
3. Contractor Qualifications.
4. Warranty.
5. Safety.
6. Working Conditions.

1.2 GENERAL TERMS AND CONDITIONS.

A. The goal is to accomplish this technology project utilizing **McFarland PD**-IT-approved materials in the most economical and systematic possible and compliant with the latest codes, cabling standards, and industry best practices.

B. The General Contractor is responsible for all required Division 27 scope of work and shall ensure that all communication sub-tier contractors adhere to the qualifications outlined in project Division 27 specifications, including project experience and certifications.

C. Prices quoted shall be all-inclusive and represent a complete, fully-engineered system installation at the Project site as contemplated and detailed in the drawing package and accompanying specifications.

D. Omissions in the specification of any described provision shall not be construed to relieve the Contractor of any responsibility or obligation requisite to the complete and satisfactory delivery, installation, operation, and support of any and all systems, equipment, or services. Correction of any omission on the Contractor's part due to misinterpretation of this specification or any other project conditions shall be the Contractor's responsibility and shall not result in any contract modification or additional costs to **McFarland PD**.

E. Where conflicts and/or irregularities occur between project documents, specifications, drawings, and/or applicable codes, rules, regulations, ordinances, standards, guidelines, and practices, the more stringent requirement shall apply as reasonably determined by **McFarland PD** or government agency inspector.

F. This specification represents the design intent for the project communicated by way of narrative descriptions of intended functionality and a single line or detail drawings indicating likely equipment connectivity to achieve that functionality. The designs in this specification do not represent fully engineered technical solutions. Contractors are required to review the designs presented in the project documents closely, submit any questions and clarifications regarding the

design intent through the RFI process, and develop their own engineered solutions representing a fully functional turn-key solution in their bid responses.

G. this project's scope includes the complete system engineering, procurement, fabrication, installation, programming, testing, training, and warranty.

H. Proposed solutions shall be based on the designs communicated in the specifications. Still, they shall include any additional equipment, materials, software, licenses, and/or labor required for the Contractor to deliver a fully functional turn-key system solution that meets intended operational performance requirements.

I. The contractor awarded this project is responsible for ensuring that all quantities, materials, labor, licenses, permits, sales taxes, and any other costs to provide a turnkey project are included in their bid.

J. Floor plans, drawings, elevation drawings, and other drawings received by the Contractor as part of the construction process are hereby incorporated into this document by reference. The Contractor is responsible for ensuring that amounts and lengths of cabling and pathways are correct and that all materials and labor are included to install the system per the drawings and these specifications.

K. Permits, licenses, applicable sales taxes, insurance requirements, payment/performance bond costs, and other miscellaneous costs are the Contractor's responsibility and shall be included in the contract price and this scope of work. Such items are to be listed separately on pricing sheets if provided. Copies of all required permits, licenses, insurance requirements, and bond(s) are to be delivered to **McFarland PD** before the commencement of any work.

L. Installation Schedule and Coordination: the Contractor shall take the fast-track nature of this project and the potential requirement for installation/work schedule adjustments and quick turnarounds into consideration in constructing this project, as the **McFarland PD** will NOT entertain or agree to added-cost change orders associated with scheduling changes.

M. Work must be closely coordinated with the architect, **McFarland PD** Personnel (PW, IT, PD, etc.), GC, MEP contractors, structural Contractors, and all low-voltage contractors and their respective schedules.

N. This will be a turn-key Project. Any item of the equipment or material not explicitly addressed on the drawings, specifications, or elsewhere in Division 27 specifications documents but required to provide complete and functional systems as contemplated and/or specified herein shall be provided at no additional charge to the **McFarland PD** in a quantity and quality consistent with other specified items.1

O. Coordination with Project Design Team: The building contractor will coordinate all communications cabling infrastructure requirements, including review of existing site conditions, review and coordination of electrical power and grounding requirements, conduits and back boxes, structural support requirements, and coordination with other trades.

P. Assembly: The Contractor shall procure and assemble all hardware, equipment, and any additional materials required to deliver the completely functioning communications cabling system.

Q. Installation: The Contractor shall install all equipment, inter-rack and intra-rack cable, equipment, wiring, connectors, panels, plates, and other materials at the Project site.

R. Testing and Adjustment: The Contractor shall perform all tests and adjustments, furnish all test equipment necessary, and perform all Work required to properly configure the systems and verify their performance per the information in this document and the design-build integrator's approved engineered designs.

S. Warranty: The Contractor shall warrant the installed system in accordance with the terms of this document and accompanying contractual documents.

1.3 RELATED DOCUMENTS

A. All Construction Contract Documents, specification documents, and general provisions.

B. Division 1 specification sections. (**McFarland PD** Project Manager & **McFarland PD** Acct. Representative)

C. Section 27 05 26 Grounding Bonding for Communications Systems

D. Section 27 05 29 Hangers and Supports for Communications Systems.

E. Section 27 05 33 Conduit and Boxes for Communications Systems.

F. Section 27 05 36 Cable Tray for Communications Systems.

G. Section 27 11 16 Cabinets, Racks, Enclosures for Communications Systems.

H. Section 27 13 00 Communications Copper Backbone Cabling.

I. Section 27 13 23 Communications Optical Fiber Backbone Cabling.

J. Section 27 15 00 Copper Horizontal Cabling.

K. Section 27 40 00 Integrated Audio-Video Systems and Equipment.

L. Architectural, civil, structural, mechanical, electrical, and all technology drawings, including but not limited to Telecommunication Drawings.

M. Product manufacture data sheets and installation requirements for the product's intended use or assembly.

N. Project Basis of Design document for low-voltage/signal systems (a.k.a. Technology Systems including but not limited to IP Networks, Wireless IP Networks, and Category 6A Structured Cabling Solutions, Remote IDF, furniture systems interface, New conduit locations, etc).

O. Refer to structural seismic requirement design documents specifications, if available, for Non-Structural Components for all structural bracing and support of telecommunications equipment.

1.4 REFERENCES

A. Abbreviations and Acronyms: (See associated drawing set - cover sheet(s) for a complete list).

1.	A/E	Architect / Engineer (designer)
2.	BICSI	Building Industry Consulting Service International
3.	CPCI	Contractor Provided Contractor Installed
4.	EIA	Electronics Industry Alliance
5.	ELFEXT	Equal Level far End Cross Talk
6.	FTP	Foiled Twisted Pair
7.	IDF	Intermediate Distribution Facility (aka TR)
8.	ILEC/LEC	Incumbent Local Exchange Carrier
9.	ISP	Inside Plant
10.	IT	Information Technology
11.	BDF	Building Distribution Frame
12.	LOMMF	Laser Optimized Multi-Mode Fiber
13.	MDF	Main Distribution Facility (aka TEC)
14.	MPOE	Minimum Point of Entry
15.	NEXT	Near End Cross Talk
16.	OAR	Owner Approved Representative
17.	OSP	Outside Plant
18.	PSELFEXT	Power Sum Equal Level Far End Cross Talk
19.	PSNEXT	Power Sum Near End Cross Talk
20.	PW	Public Works
21.	RCDD	Registered Communications Distribution Designer
22.	TBD	To Be Determined
23.	TCIM	Telecommunication Cabling Installation Manual
24.	TDMM	Telecommunications Distribution Methods Manual
25.	TIA	Telecommunications Industry Association
26.	UTP	Unshielded Twisted Pair
27.	WAO	Work Area Outlet
28.	WAP	Wireless Access Point

B. Definitions
1. As-Built
2. Provide – in reference to the contractor's scope to purchase, install, & commission
3. Record Drawings – contractor digital drawing record of project as-built conditions including all RFI and change orders using the project shop drawings as the starting point

1.5 APPLICABLE REGULATORY REFERENCES

A. The Contractor is responsible for knowledge and application of current versions of all applicable Best Practices, Standards, and Codes/Regulatory requirements. In cases where listed Standards and Codes have been updated, the Contractor shall adhere to the most recent revisions, including all relevant changes or addenda at the time of installation.
1. ANSI/IEEE
   a. ANSI/IEEE C2, National Electrical Safety Code®
2. ANSI/NECA
   a. ANSI/NECA-1-2015 Standard for Good Workmanship in Electrical Construction
3. ANSI/TIA:

a. TIA-526-7 (OFSTP-7) (July 2015) Measurement of Optical Power Loss of Installed Single-Mode Fiber Cable Plant
b. TIA-526-14-C (April 2015) (OFSTP-14) Optical Power Loss Measurements of Installed Multimode Fiber Cable Plant
c. ANSI/TIA/EIA-598-D (2018) Optical Fiber Cable Color Coding
d. ANSI/TIA-568-C.0 (December 2015) Generic Telecommunications Cabling for Customer Premises
e. TIA-568-C.0-1 (September 2012) Generic Telecommunications Cabling for Customer Premises-Addendum 1, Updated Reference for Balanced Twisted-Pair Cabling
f. ANSI/TIA-568-C.1 (February 2012) Commercial Building Telecommunications Cabling Standards
g. TIA-568-C.1-2 (November 2014) Commercial Building Telecommunications Cabling Standard, Addendum 2 General Updates
h. ANSI/TIA-568-C.2 (June 2016) Balanced Twisted Pair Communications Cabling and Components Standards
i. ANSI/TIA-568-C.3 (June 2011) Optical Fiber Cabling Components Standard
j. ANSI/TIA-568-C.3-1 (December 2011) Optical Fiber Cabling Component Standard- Addendum 1, Addition of OM4 Cabled Optical Fiber and array connectors
k. ANSI/TIA-568.1 Revision E, March 2020
l. ANSI/TIA-568D – Series Generic Telecommunications Cabling for Customer Premises (that includes Cat6A, OM5, and other cable performance enhancements)
m. ANSI/TIA-1183-A (2017) Test Fixtures for Balun-Less Measurements of Balanced Components and Systems
n. ANSI/TIA-568-C.4 (July 2011) Broadband Coaxial Cabling Components Standard
o. ANSI/TIA-942-B (2020) Telecommunications Infrastructure Standard for Data Centers
p. TIA-569-E (2020) Telecommunications Pathways and Spaces
q. ANSI/TIA-606-C (2017) Administration Standard for Telecommunications Infrastructure
r. TIA-607-D (2019) Generic Telecommunications Grounding (Earthing) and Bonding for Customer Premises
s. TIA-758-B (2018) Customer-Owned Outside Plant Telecommunication Infrastructure Standard
t. TIA-1152-A (2016) Requirements for Field Test Instruments and Measurements for Balanced Twisted-Pair Cabling
u. ANSI/TIA-862-B (February 2016) Structured Cabling Infrastructure Standard for Intelligent Building Systems.
v. TIA-570-D (2018) Residential Telecommunications Infrastructure Standard
w. TIA-1005-A (June 2012) Industrial Telecommunications Infrastructure Standard for Manufacturing, Process & Refining
x. ANSI/TIA-1005 (January 2015) Telecommunications Infrastructure Standard for Industrial Premises
y. TIA-1005-1 (May 2012) Telecommunications Infrastructure Standard for Industrial Premises; Addendum 1 - Industrial Pathways and Spaces
z. TIA-1179-A (July 2018) Healthcare Facility Telecommunications Infrastructure Standard

4. ISO/IEC
   a. ISO 11801-6 (2017) - Generic Cabling for Customer Premises

b. ISO/IEC TR 14763-3-2 (2016) - Information technology -- Implementation and operation of customer premises cabling -- Part 2-1: Planning and installation - Identifiers within the administration system

5. National Codes
   a. ANSI/NFPA 70-2017, National Electrical Code© (NEC©)
   b. ANSI/NFPA 99-2021, Health Care Facilities Code
   c. ANSI/IEEE C2-2017, National Electrical Safety Code®
   d. ANSI/NFPA 780, Lightning Protection Code
6. Federal Communications Commission
   a. (FCC) Part 15
   b. (FCC) Part 68
7. OSHA Standards and Regulations – all applicable
8. American Society for Testing Materials (ASTM) Publications
9. National Electrical Manufacturer's Association (NEMA) Publications

10. State of California Public Utilities Commission (Cal. P.U.C.) Publication

    a. G.O. 92, 95, & 128 Rules for Construction of Underground Electrical and Communications Systems
    b. Rural Utilities Services (RUS), formally REA
11. 2022 California Title 24
    a. 2022 California Administrative Code, Title 24 Part 1
    b. 2022 California Building Code, Title 24 Part 2
    c. 2022 California Electrical Code, Title 24 Part 3
       1) Chapter 2: Article 250 "Grounding"
       2) Chapter 3 compliant installation with modification to accommodate optical fiber manufacturer's installation requirements.
       3) Chapter 6: Articles 645, & 646
       4) Chapter 7: Articles 725 & 770
       5) Chapter 8: All Systems & related work by reference to other articles
    d. 2022 California Mechanical Code, Title 24 Part 4
    e. 2022 California Plumbing Code, Title 24 Part 5
    f. 2022 California Energy Code, Title 24 Part 6
    g. 2022 California Fire Code, Title 24 Part 9
    h. 2022 Green Building Standard Code, Title 24 part 11
    i. 2022 California Standard Code, Title 24 Part 12
12. Underwriters Laboratories Inc. (U.L.) Publications
    a. 6-1981 (R86) Rigid Metallic Conduit
    b. 514B-1982 Fittings for Conduit and Outlet Boxes
    c. 651-1981 Schedule 40 and 80 Rigid PVC Conduit
    d. UL 467 "Grounding and Bonding Equipment"
    e. UL 497, 497A, and 497B "Communications Circuit Protectors"
    f. UL 924 & UL1994 Emergency Lighting
13. Local Codes and Standards – all applicable
    a. **McFarland PD**– Installation and Best Practices
    b. **McFarland PD**– Information Technology – Standard Equipment and Installation Best Practices
14. BICSI Publications, Manuals, & ANSI Approved BICSI Standards
    a. Telecommunications Distribution Methods Manual, 15th Edition
    b. AV Design Reference Manual, 1st Edition (2015)

c. Network Design Reference Manual, 7th Edition (2015)
d. Network Systems and Commissioning (NSC) reference, 1st Edition (2015)
e. Outside Plant Design Reference Manual, 6th Edition
f. Wireless Design Reference Manual, 3rd Edition (2015)
g. Electronic Safety and Security Design Reference Manual, 4th Edition. (2014)
h. Information Technology Systems Installation Methods Manual (ITSIMM), 6th Edition
i. ANSI/BICSI 001-2017, Information Transport Systems Design Standard for K-12 Educational Institutions
j. ANSI/BICSI 002-2019, Data Center Design and Implementation Best Practices
k. ANSI/BICSI 003-2014 Building Information Modeling (BIM) Practices for Information Technology Systems
l. BICSI 004-2018, Information Technology Systems Design and Implementation Best Practices for Healthcare Institutions and Facilities
m. ANSI/BICSI 005-2016 – Electronic Safety and Security (ESS) System Design and Implementation Best Practices
n. ANSI/BICSI 006-2020 Distributed Antenna System (DAS) Design and Implementation Best Practices
o. ANSI/BICSI 007-2017 Information Communication Technology Design and Implementation Practices for Intelligent Buildings and Premises
p. ANSI/BICSI 008-2018 Wireless Local Area Network (WLAN) Systems Design and Implementation Best Practices
q. ANSI/BICSI 009-2019 Data Center Operations and Maintenance Best Practices
r. ANSI/BICSI N1-19 Installation Practices for Telecommunications and ICT Cabling and Related Cabling Infrastructure. Formally known as - ANSI/NECA/BICSI 568-2006, Standard for Installing Commercial Building Telecommunications Cabling
s. ANSI/BICSI N2-17 Practices for the Installation of Telecommunications and ICT Cabling Intended to Support Remote Power Applications
t. ANSI/BICSI N3-20 Planning and Installation Methods for the Bonding and Grounding of Telecommunication and ICT Systems and Infrastructure – formally known as - NECA/BICSI 607-2011, Standard for Telecommunications Bonding and Grounding Planning and Installation Methods for Commercial Buildings
u. BICSI G1-17 ICT Outside Plant Construction and Installation: General Practices

15. Anywhere cabling Standards conflict with electrical or safety Codes, the Contractor shall defer to NEC and any applicable local codes or ordinances or default to the most stringent requirements listed by either.
16. Knowledge and execution of applicable codes is the Contractor's sole responsibility.
17. Any code violations committed during installation shall be remedied at the Contractor's expense.

1.6 SCOPE OF WORK

A. General project information:
1. These Specifications and associated drawings are the governing documents for the telecommunications infrastructure installation and include project descriptions, specified and recommended products, installation and project management methods, the Scope of Work, and elevation drawing specifications.
2. This division specification document will refer to {Name} as the **McFarland PD**.

3. **McFarland PD** wishes to contract with a General Contractor, who will sub-tier the supplier/contractor ("ICT-Information, Communication Technology, and Audio-Visual") to provide, install, test, and warranty a complete turn-key a Cable Infrastructure System and Audio-Visual System for the **McFarland PD** 's {Building Name}, the "Project" per the scope of Work and specifications stated herein. This inquiry implies no obligation on the part of **McFarland PD**. The Contractor shall bear all costs and expenses incurred in preparing a response to a Request for Proposal ("RFP") and subsequent award of the project; it is understood and agreed that **McFarland PD** accepts no responsibility for any costs and/or expenses incurred by the winning Contractor in preparing and submitting such response.
4. The **McFarland PD** is developing a Police Station. The new facility will approximately 16,200 square feet. The building will consist of the following:
   a. 14,000 square feet of office spaces and 1,400 square feet of Sallyport
   b. Audio Visual infrastructure and systems for multi-purpose rooms, conference rooms and paging systems.
   c. Physical security systems including access control
   d. IDF/BDF/ Server room
      1) 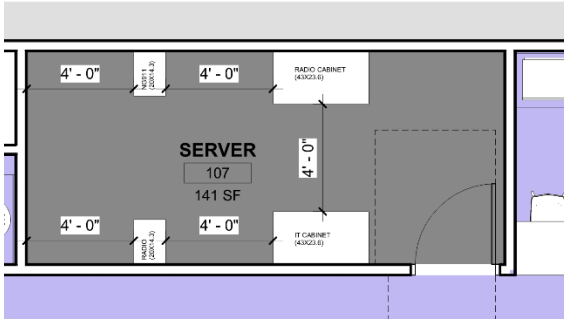

   e. Cat6A – Shielded – 24AWG
   f. Single mode fiber

B. Purpose:
   1. This specification defines quality standards and practices common to all network cabling for the project. In addition, the project will have Requests for Proposals (RFP), associated drawings, and requirements about their specific environments. This document will refer to such collateral as "Project Specific Documentation" or simply "Construction Documents."
   2. Voice and Data Networks encompass a broad spectrum of technologies and are distributed into internal project spaces. Installed cables will be used for Ethernet, high and low-speed data applications, and analog and digital voice, not to exclude other future Voice/Data technologies. This specification will include indoor/outdoor cable installations, backbone cabling, telecommunications closet and equipment cabling, equipment hardware, and routing and support infrastructure.
   3. the installing Contractor is responsible for evaluating these general recommendations and adapting them effectively to actual projects. The Contractor is responsible for identifying and bringing to the attention any design directions that may be in conflict or otherwise improved. All such conflict resolutions shall be in writing from A/E or **McFarland PD**.
   4. Note that while many portions of this global specification are addressed to "The Contractor," these requirements apply equally to anyone doing the network cabling and infrastructure work within, whether those persons are outside contractors or persons directly employed by the **McFarland PD**.

5. The Contractor shall be solely responsible for all parts, labor, testing, documentation, and all other associated processes and physical apparatus necessary to turn over the completed system fully warranted and operational for acceptance by A/E and manufacturer's representative.
6. This specification includes structured cabling design considerations, product specifications, and installation guidelines for low-voltage network systems and associated infrastructure, including but not limited to:
    a. Cabling Sub-system 1 – Horizontal
        1) Category 6A cable
        2) Work area (equipment outlet) appliances and configuration (Furniture systems cabling).
        3) Horizontal Pathways
        4) Copper Patching
    b. Backbone Cabling
        1) Interbuilding backbone – Copper and Fiber
        2) Patching / Cross-connect – Copper and Fiber
    c. Telecommunications Spaces
        1) Telecommunications Room Requirements
        2) Racks and Cabinets
        3) Overhead Pathways
    d. Communications Grounding Systems
    e. Communications Labeling and Administration

C. Scheduling:
1. Contract Documents and the overall construction schedule must be carefully reviewed to determine all required interfacing and timing of the Work. All such documents shall be available through the General Contractor or Construction Manager.
2. The project schedule shall include, but is not limited to, the following task sequence:
    a. New Server Room, IDF Construction, and buildout.
    b. Conduit infrastructure: including vaults/pull box install and conduit duct banks.
    c. Individual Building Pathway Installation.
    d. Building Category 6A Cable installations; includes installation, termination, labeling, testing, as-built, and warranty documentation.
    e. Wireless Access Points.
    f. New backbone fiber optic cabling installations: includes installation, termination, labeling, testing, as built, and warranty documentation.
    g. Service provider cabling and equipment installation.
    h. Service provider completion and commissioning.

D. Coordination:
1. Install and coordinate the telecommunications cabling work in cooperation with other trades installing interrelated work. Before installation, make proper provisions to avoid interference in a manner accepted by the architect. Any repairs or changes made necessary in the contract work caused by the sub-contractor's neglect shall be made by the sub-contractor at their own expense.

E. Project Scoping from Basis of Design:
1. The Contractor shall use all **McFarland PD** current technology standards input for a complete functioning turn-key technology solution.
2. Scope of Work (Narrative):

a. The telecommunications infrastructure for the **McFarland PD** (Campus/Site) shall include a standard infrastructure to support voice, data, wireless communications, and specified audio-visual services. The foundation for the design shall be according to **McFarland PD** Design Guidelines (if applicable), EIA/TIA 568C & D Series and 569B standards, along with BICSI Methodologies (TDMM and OSPDRM), Industry Best Practices, and Manufacturer's Installation Requirements.

b. All Low-Voltage/Signal Systems shall be installed and furnished by a manufacturer's pre-qualified company. A certified manufacturer's representative shall install the low voltage/signal infrastructure with all material covered under an extended warranty for compliance with **McFarland PD** Standards. A minimum 25-year extended product and performance warranty must cover the new cabling. Each installer must show proof of training and proficiency for the Low-Voltage/Signal Systems being expanded and extended to for the building type. All hardware the Contractor provides shall be "new in the box" and match the existing in-service back-end and end-devices to maintain the current Campus low-voltage/signal system's integrity. All Contractor-furnished equipment and materials shall be in full compliance with district specifications and shall be submitted to the project OAR for **McFarland PD** review and acceptance prior to contractor installation. Equipment and materials submittals shall comply with specified formatting and indexing defined in the system-specific specification. Any and all equipment that does not match the current (Campus/Site) solution/part number(s) is required to be accompanied by a letter and cross-reference table(s) from the manufacturer for verification that the product is compatible with the interface with currently deployed solutions.

3. Make Ready and Demolition Scope of Work (Narrative):

a. The Contractor shall be required to work with the **McFarland PD** IT Services and the General Contractor not only to verify and document each portion of the demolition but there shall be times when the temporary connection of certain low-voltage/signal systems shall be required to be immediately reconnected for safety and to provide the campus and its occupants with systems operating as normally as possible.

b. The Contractor shall be required to assist **McFarland PD** IT Staff with disconnecting and removing Low-Voltage/Signal end devices and associated IDF equipment in the buildings identified as part of the demolition phase(s). This work may include multiple sub-phases in each building being demolished and buildings that feed from or to the buildings on the demolition list.

c. The Contractor shall verify through **McFarland PD** Authorized Representative (OAR) that the IT Staff have removed all connections to each building/BDF/MDF/IDF before disconnecting and removing building entrance cabling and associated equipment.

d. The Contractor shall remove all low voltage/signal cabling associated with demolishing the building. End devices from all common voltage/signal systems will have a predefined location for staging and inventory post-demolition activities.

e. As part of the Contractor's responsibility, all conduits where backbone cabling has been removed shall be identified on project as-builts. At a minimum, the Contractor shall provide the following information:

1) Supporting route (complete with all pull-box locations).
2) Conduit sizes (update conduit elevation in each vault).
3) Quantity of cables removed, the quantity of each type of cables staying, cable type, and manufacturer.

4) (Campus/Site) wireless, PA announcements, and camera surveillance.

f. The Contractor shall:
   1) Install a 3/8" cotton measured line (Mule-Tape) with duct plugs on each end of the conduit.
   2) Assist the **McFarland PD** IT Staff with identifying areas no longer covered by the building being removed from service.
   3) Immediately respond to any and all unforeseen outages caused by any demolition activity on campus/site.

1.7 SYSTEM DESCRIPTION AND GENERAL RESPONSIBILITIES

A. The work to be performed under this contract includes the furnishing of all labor, materials, and equipment for an industry-compliant CFCI telecommunications pathway and spaces building system, analog and optical fiber backbone cabling solution, category six enhanced (6A) manufacturer-compliant structured cabling systems with extended performance and replacement warranty, for the systems required by the project. These systems include OFOI data network connections, OFCI VoIP instruments, and CFCI headend interfaces', OFCI Campus wireless and Wi-Fi access, CFCI Paging, CFCI Time and Attendance functionality, CFCI Video surveillance system, a CFCI physical access control system, a CFCI duress/panic system, and a CFCI audio announcement system. Work shall include all provisions of new electronic controls systems, including physical access control, duress alarm, video surveillance, and audio. The portion of the work is to be bid as an optional add alternate, and the **McFarland PD** may or may not choose to execute this work under the contract.

B. Combined Prescriptive and Performance Design Requirements
   1. Division 27 includes a combination of prescriptive and performance specifications. Compliance with the performance specifications and coordination and integration of the prescription requirements will require substantial design work on the Contractor's part.
   2. The performance requirements are intended to establish overall system performance requirements, satisfy the operational requirements, and establish the inter-coordination requirements for the Division 27 systems.
   3. The prescriptive requirements establish the minimum quality, characteristics, and types of components, equipment, and materials to be used to achieve the stated system performance requirements. The Contractor is advised, however, that prescriptive specifications have not been provided to satisfy all of the specified performance requirements.
   4. The Contractor shall carefully consider all the requirements for each of the Division 27 systems when preparing a bid. Any questions regarding the intent of these requirements, the scope of the systems, or their coordination requirements must be submitted in writing prior to bidding in accordance with the Instructions to Bidders. The Contractor shall have no claim for either extra compensation or extra time on the grounds that it did not understand the scope of the requirements of the Division 27 work and/or the coordination requirements of the Division 27 work with the work of the other Divisions.
   5. Compliance with the project requirements will be progressively monitored and adjusted through the submittal process, installation period, and performance verification testing.

C. Drawing Interpretation
   1. The drawings are diagrammatic and indicate the general arrangement of systems and equipment unless indicated otherwise by dimensions or detailed drawings. The Drawings installation and schematic diagrams and symbols to outline the work to be provided. These

drawings do not have any dimensional significance, nor do they delineate every item required for the intended work. No interpretation shall be made from the limitations of symbols and diagrams that exclude any elements necessary for complete work.

2. The work shall be provided by the intent expressed on the Drawings and Specifications and in conformance with the actual building architectural and structural conditions. When in conflict, field conditions take precedence over the Contract Documents.
3. The meaning of abbreviations shall be the same in lowercase letters or without periods.
4. The use of words in the singular shall not be considered as singular where other indications denote that more than one item is referred to.
5. Details that appear on the Contract Documents, which are specific regarding the dimensioning and positioning of the Work, are intended only for establishing general feasibility. They do not replace engineering or field coordination by the Contractor for the work.

D. Provide all parts and equipment for a complete and operational system for the Work of Division 27 as described herein and shown on the drawings.

E. Furnish and install all trenching and backfill, duct banks, conduits, raceways, sleeves, boxes, gutters, shelves, enclosures, shelf and enclosure supports, backboards, and pull ropes (in unused or spare conduits) required to make all systems fully operational, including components not shown on the Drawings, but necessary for fully operational systems.

F. Furnish, install, terminate, test, dress, and identify all wire and cable required to make systems fully operational, including all wire and cabling not shown on the Drawings but necessary for fully operational systems.

G. Recognize that the Work entails integration between individual systems, as well as the design and implementation of many systems and component interfaces. Take full responsibility for the complete design, installation, and performance of the total integrated system, including integration between systems and various interfaces, in order to achieve the specified operational features and system performance requirements.

H. Fully test the systems, demonstrate their satisfactory operation, and train maintenance and operating personnel, as specified in this Section and the Sections governed by this Section.

1.8 CONTRACTOR QUALIFICATIONS

A. General:
1. The Contractor shall have at least 5 years' experience installing and testing structured cabling systems.
2. The Contractor shall employ at least one BICSI Registered Communication Distribution Designer (RCDD), and the RCDD shall sign-off on all designs offered, including stamping the design with their current BICSI/RCDD stamp.
3. The Contractor shall be responsible for obtaining any necessary permits, licenses, and inspections for the performance of data, voice, and fiber optic cable installations.
4. The Contractor shall be a current manufacturer with a Certified Installer certificate. A copy of the corporate certificate shall be included with the quote.
5. The Contractor shall have service facilities within 50 miles of the project location.

6. At least 75 percent of the technicians on the job shall have a current manufacturer Certified Copper Technicians certificate to install manufacturer Copper Distribution Systems.
7. At least 75 percent of the technicians installing any Fiber Distribution Systems shall have a current manufacturer Certified Fiber Technicians certificate to install Fiber Distribution Systems.
8. The Telecommunications contractor shall provide a project manager to serve as the single point of contact to manage the installation, speak for the Contractor, and provide the following functions:
   a. Initiate and coordinate tasks with the Construction Manager and others as specified by the project schedule.
   b. Provide day-to-day direction and on-site supervision of Contractor personnel.
   c. Ensure conformance with all contract and warranty provisions.
   d. Participate in weekly site project meetings.
   e. This individual shall remain the project manager for the project duration. The Contractor may change the Project Manager only with the written approval of A/E.

B. References:
   1. Communications: The Contractor shall provide with the bid a list of three reference accounts where similar Data, Voice, Fiber Optic Cable, and related migration/cutover equipment installation work was performed within the last year or twelve-month period.

C. Insurance Requirements:
   1. The Contractor shall be insured and shall provide with the bid a Certificate of Indemnification and Certificate of Insurance and meet all required insurance and licensing policies as specified by A/E Risk Management Division and any Federal, State, and local organization pertaining to data, voice, and fiber optic cable installation.
   2. Contractor vehicles brought onto project properties shall comply with all requirements of all Federal, State, and local agencies. Vehicles shall meet current DOT, state, and local safety inspections where required.

D. Termination of Services:
   1. **McFarland PD** or A/E reserves the right to terminate the Communication Contractor's services if the A/E determines the Communication Contractor is not fulfilling their responsibilities as defined in this document.
   2. The Contractor's appearance and work ethic shall be of a professional manner, and dress shall be commensurate with the work being performed.
   3. Dress displaying lewd or controversial innuendos is strictly prohibited.
   4. Conduct on project property shall be professional in nature.
   5. Any person in the Contractor's employ working on a project considered to be incompetent or disorderly, or for any other reason unsatisfactory or undesirable, shall be removed from work on the project.
   6. The Communications Contractor shall be restricted from the premises and compensated for the percentage of work completed satisfactorily.

E. Other Contractor Responsibilities:
   1. The Contractor is responsible for the removal and disposal of all installation and construction debris created in the process of the job. All work areas shall be cleaned at the conclusion of the workday, and no tools or materials shall be left in a manner as to pose a safety hazard.

2. The Contractor shall remove all abandoned cables per Article 800 of the National Electrical Code and per TIA and BICSI standards, recycling these materials where possible. This is mandatory; Contractors shall consider this when placing bids.
3. The Contractor shall abide by the regulations set by A/E or **McFarland PD** Security Department pertaining to access to and conduct while on project property and shall obey speed limits and parking regulations.

1.9 SYSTEM PERFORMANCE WARRANTY

A. General
1. The Contractor shall provide a manufacturer System Warranty on all copper and fiber permanent cabling links.
2. This is a system performance warranty guaranteeing for a minimum of 20 years from acceptance that the installed system shall support all data link protocols for which that copper Category (6A) or fiber OS designation is engineered to support according to IEEE and TIA standards.
3. The manufacturer's System Warranty may be invoked only if the cabling channel links are comprised of manufacturer connectivity and approved by the manufacturer. Patch cords shall be same manufacturer of cable.
4. Upon acceptance of the Warranty, the manufacturer will mail a notification letter to the installer and a notification letter and warranty certificate to **McFarland PD**-IT
5. See this for additional information on optical fiber extended warranty, and U/UTP extended warranty requirements

B. Contractor Warranty Obligations
1. The installation firm shall be a current manufacturer-certified installer in good standing and shall include a copy of the company certification with the bid.
2. The Contractor shall name a supervisor to serve on-site as a liaison responsible for inspecting and ensuring that all terminations comply with factory methods taught in manufacturer Technician Certification Training and according to all Standards cited in the Regulatory References section of this document.
3. The Contractor liaison shall have a current, up-to-date manufacturer-certified technician certificate in copper and fiber. Copies of the copper and fiber certificates of the manufacturer liaison shall be submitted with the bid.
4. The Contractor agrees that all active link components shall be of the same copper Category (6A) or fiber OS/OM designation as the installed system. The Contractor shall under no circumstances mix different Categories or OS/OM classes of cable or termination devices (connectors) within the same link or system.
5. The Contractor shall install all racking and support structures according to cited TIA Standards in such fashion as to maintain both Standards and Manufacturer recommendations for uniform support and protection, segregation of different cable types, maintenance of maximum pulling tensions, minimum bend radius, and approved termination methods as well as adhering to industry accepted practices of good workmanship.
6. The Contractor is responsible for understanding and submitting to the manufacturer all documents required prior to the project start to apply for this warranty. These include but are not limited to the project information form and SCS warranty agreement.

7. The Contractor is responsible for understanding and submitting to the manufacturer all documents required at the project end. These include completed warranty forms, passing test reports, and drawings of floor plans showing the locations of links tested.
8. Test results shall be delivered in the tester native format (not Excel) and represent the full test report. Summaries shall not be accepted—contact the manufacturer for a current list of approved testers, test leads, and the latest operating systems.
9. The Communications Contractor shall correct any warranty-related problems and malfunctions without additional charge for the entire warranty period. The warranty period shall commence following A/E's acceptance of the project and written confirmation of the Warranty from the manufacturer.

C. Corning Optical Fiber Solution
1. Contractor shall provide a **McFarland PD**-IT Standard's Base Solution that shall perform and be installed per Corning installation requirements.
2. Warranty Requirements
   a. Required is a Corning Optical Communications 25-Year Extended Warranty on this project using only Covered Corning Optical Communications Products, as originally installed. As used herein, Warranty Term means:
3. Term means:
   a. Twenty-five (25) years beginning on the Installation Date (as defined below) for an Enterprise Networks or Premises Fiber Optic Cabling Solution.
4. Covered Corning Optical Communications Products means:
   a. new fiber optic cabling infrastructure with material supplied by Corning Optical Communications; and
   b. 1- or 2-fiber simplex/duplex patch cords manufactured by Corning Optical Communications or manufacturers approved in writing by Corning Optical Communications, including Cable Assembly House (CAH) Connections Gold Program Members, with a 0.75 dB max insertion loss specification.
5. Warranty Conditions:

   a. The preceding warranty is expressly conditioned upon the satisfaction of each of the following, as applicable:
      1) Covered Corning Optical Communications Products shall be installed in accordance with the most current revision level of the National Electrical Code, ANSI/TIA-568, ANSI/TIA-569, TIA-942, Fibre Channel FC-PI, Fibre Channel 10 GFC, IEEE 802.3, InfiniBand Standards and Corning Optical Communications' LAN-1561-AEN attached as Exhibit C and NPI Testing Guidance.
      2) The installation shall consist of Covered Corning Optical Communications Products only.
      3) "Installation Date" means the date of the completed installation by a Certified Member of the Corning Network of Preferred Installers or NPI.
6. NPI installers can be found by using the following link:
   a. **http://corning.force.com/opcomm/nafta/npi/directory** (within the US)
   b. **http://corning.force.com/opcomm/cala/pge/directory** (outside the US)
7. **Corning Optical Communications** and its agents shall have the right to inspect the installed Covered Corning Optical Communications Products during the term of this extended warranty.

1.10 SAFETY

A. General

1. All cabling work being performed on project property or under contract shall comply with Rules for safe operations of state or local safety regulations and meet the requirements of OSHA Safety and Health Standards. The contractor Project Manager shall maintain a copy of the Rules for Safe Operations for reference. It is the responsibility of the Communications Contractor to immediately correct any unsafe working practices on the part of contractor personnel. Contractor personnel's unsafe working environments or conditions shall be reported immediately to the Construction Manager.
2. Any liability for correcting conditions created by the Contractor's personnel rests with the Contractor.
3. The Communications Contractor shall be solely and entirely responsible for conditions of the job site (as pertaining to the materials and equipment specified), including the safety of persons and property during the performance of work.
4. No act, service, drawing review, or construction observance by any employee, representative, or engineer may be construed as a review or approval of the adequacy of the Contractor (s) safety measures in, on, or near the construction site.

1.11 WORKING CONDITIONS

A. Site Access

1. All cable installations shall be pre-approved by the Construction Manager to ensure that the necessary arrangements have been made for proper access to project sites.
2. A twenty-four-hour prior notice shall be submitted to the Construction Manager for any work schedule changes.
3. The Communications Contractor shall display badges or passes as mandated by project property Security Department Rules and Regulations.

B. Scheduling

1. Coordination of site surveys and the issue of project **McFarland PD**-owned materials and equipment shall be the responsibility of the Construction Manager. Once said equipment and materials are in the Contractor's possession, the contractors must safeguard the material and equipment from damage or theft.
2. Information required by the Contractor to price and complete a defined scope of Work shall be furnished to the Communications Contractor by the A/E Project Manager in a Scope of Work document and at the time of the site survey (if necessary). The Communications Contractor shall maintain it until the completion of the job.
3. The contractor is responsible for beginning Work promptly according to the Start Dates and completing Work by the Proposed Completion Date listed on the Cable Run Request Form.
4. The Contractor shall notify the Construction Manager in writing of any delays; at that time, they shall come up with a mutually agreeable project schedule.
5. The Communications Contractor shall coordinate with the Construction Manager's working hours and job site access issues.
6. The Communications Contractor shall coordinate with the Construction Manager to minimize outages to the existing systems.
7. Any service interruption required by the Communications Contractor shall be requested in writing and scheduled with the Construction Manager.

8. The Communications Contractor shall not proceed with the requested service interruption until the Construction Manager grants written approval.
9. All problems and questions relating to a particular job shall be referred to the Construction Manager, and no changes shall be made without their written approval.

C. Harmony Clause
1. The Contractor shall coordinate and work in harmony with other trades on the project as well as with A/E personnel for the best interests of the **McFarland PD** of the project.
2. Coordination shall include but not limited to:
   a. Service Provider for the (utility) area and the building (including required services – i.e.. Riser Company)
   b. Division 8 contractor for access control and interfaces for indoor and outdoor.

1.12 COORDINATION

A. Coordinate layout and installation of voice and data communication cabling with other **McFarland PD** contractors and equipment suppliers.
1. Meet jointly with other contractors, equipment suppliers, and **McFarland PD** representatives to exchange information and agree on details of equipment arrangements and installation interfaces.
2. Record agreements reached in meetings and distributed to other participants.
3. Adjust arrangements and locations of distribution frames, cross-connect, and patch panels in equipment rooms and telecommunications rooms to accommodate and optimize voice and LAN equipment's arrangement and space requirements.
4. the Contractor shall reuse existing copper and fiber optic backbone cables when indicated on drawings.
5. Provide weekly progress reports and crew schedules to project representatives by 5:00 p.m. Thursday (or agreed upon day) of each project work week.

1.13 ACTION SUBMITTALS

A. Product Data: For each product indicated.
1. Submit all product data in accordance with the general requirements of the construction documents.
2. Submit product cut sheets and a detailed list of components a minimum of two (2) weeks prior to commencement of Division-27 Work for A/E review and action.
3. The Contractor shall submit product materials in one complete Division 27 package, with sub-divisions clearly identified. Products applicable to project drawings and specifications are clearly identified under each sub-division.
4. The Contractor shall provide product data and installation instructions for all fire-stopping materials.
5. Alternate and "Or Equal" designated products shall be submitted for review and judgment to the A/E prior to installation. The contractor-proposed alternate products or components shall be verified by two (2) independent sources within the past 6 months. This request shall include the two (2) independent sources, the original Product's specification sheet, the proposed substitute product cut sheet, and a written request to review the substitute product.

6. Any request of an alternate or substitution shall be submitted to the A/E for action no later than fourteen (14) calendar days after the release of the original telecommunications bid documents.

1.14 Information & Communication Technology (ICT) components

A. The Contract Documents generally outline industry-standard components to be installed as part of the project ICT installation requirements. Such identification is intended to be general in nature rather than exhaustive. All stated quantities are subject to validation by the ICT contractor. ICT The Contractor is reminded that differences between estimated quantities and those reasonably derived based from the Contract Documents (as well as through bid conferences, job walks, addendums, and other distribution of information) shall be the responsibility of the ICT contractor. There shall be no additional cost incurred by **McFarland PD** IT projects for not complying with the specifications and requirements of the Contract Documents.

B. Any variance from those components identified on the drawings and/or below shall be submitted to **McFarland PD** IT project representatives for approval prior to ordering and installation; the risk for all costs incurred by the ICT Contractor for materials ordered prior to such written consent shall be borne entirely by the ICT Contractor. Nonetheless, the ICT Contractor must determine the availability of necessary materials and propose equivalent substitutes as necessary to meet all installation milestones. Delays in ICT installations due to lack of product availability are unacceptable. As catalog numbers change frequently, the ICT Contractor shall verify all part numbers prior to ordering materials. Clarifications shall be issued in response to written Requests for Information (RFI).

C. Fire Stop and fire-stopping requirements for the project include the following:
   1. All conduits leaving the entrance room for other portions of the building shall be fire-stopped after cable installation.
   2. The Contractor shall fire stop around the tray and, after installation of the cables, within the tray using removable pillow-style products following manufacturers' guidelines. Sound deadening material shall be provided and installed after the installation of the cable.
   3. Strict adherence to the CEC/NEC NFPA 101 is required for any raceway penetrations of fire-rated walls. See Section 07 84 00 for UL system numbers and to construction drawings for details.
   4. All riser conduits shall be sealed using a UL-classified fire stop. The Contractor shall provide a copy of the fire seal manufacturer's installation instructions and rating information prior to inspection of the installed materials.
   5. Integrally Fire Stopped Sleeves:
      a. Integrally Fire Stopped Sleeves shall be used for Telecommunications cabling in locations where the cabling pathway penetrates a fire barrier. The IFSS shall replace the use of conduit used in conjunction with other fire-stopping methods.
      b. All manufacturer instructions and requirements shall be followed for the installation of the IFSS.
      c. Documentation shall include a picture of the completed assembly with a time/date stamp.

D. All new fiber optic cabling shall be indoor/outdoor-Plenum rated. Unrated cable (such as filled ASP) shall not be installed within the structure except when placed within IMT, PVC, or RGS conduit.

E. Throughout this specification, Systimax(Commscope), Corning, Chatsworth Products, Inc., and other manufacturers are cited. These citations are required to maintain the current **McFarland PD**-IT extended warranties and shall not be substituted without written permission from the **McFarland PD**-IT CIO. These standard **McFarland PD** products are to establish quality, performance, and warranty certification criteria.

1.13 DELIVERY AND STORAGE

C. The ICT Contractor shall provide a materials schedule prior to the start date of cable installation. The material schedule shall specify all material quantities and their delivery date for this project.

D. The ICT Contractor shall provide protection from weather, moisture, dirt, dust, and other contaminants for telecommunications cabling and pathway equipment placed in storage.

1.14 INFORMATIONAL SUBMITTALS

A. Division 27 & 28 Submittal Schedule
   1. See 27 05 00 Appendix C for contractor submittal requirements

B. Coordination Drawings:
   1. Submit all shop drawings in accordance with the general requirements of the construction documents.
   2. Submit shop drawings at least two (2) weeks before the commencement of Division 27 work for A/E review and action.
   3. Shop drawings shall include evidence that grounding and bonding components are coordinated with field conditions and the work of other trades. This submittal may have a written component and a visual, drawn component for review and action by the A/E prior to installation.

C. Certificates:
   1. Submit management and installation team reference documentation verifying that:
      a. The project manager is an RCDD in good standing with BICSI, is qualified to manage the Scope of Work described in the contract documents, and has five (5) years of experience managing similar projects in size and scope. The documentation shall include the RCDD registration number.
      b. The field supervisor is a BICSI-trained technician that is qualified to perform and oversee the work described in the contract documents.

D. Qualification Statements:
   1. The Contractor shall submit documentation that within the past 12 months, at least 75% of all installation personnel have been trained or certified by the manufacturer of the products they are installing.

1.15 CLOSEOUT SUBMITTALS

A. As-Built Drawings:
   1. Submit all as-built drawings in accordance with the general requirements of the construction documents.
      a. The drawing notes shall define field conditions experienced not described in sheet notes.
      b. The drawings shall identify all fire stop locations, and a digital picture shall accompany the as-built package.
      c. As-built conditions shall be identified on record drawings and include:
         1) Outlet location w/ Cable ID (test results to use this ID).
            a) Cable ID shall include IDF# - Patch-Panel – Port ID #
         2) Sleeves and poke-through conduit routing.
         3) Information shall be submitted for review and organizing two weeks prior to the requested punch-walk date.
   2. Submit as-built drawings a minimum of two weeks after completion of all Division 27 work for A/E and **McFarland PD** reference.
   3. Communication contractor to print, frame, and mount approved as-built drawings in MPOE. Coordinate location with A/E.

1.16 QUALITY ASSURANCE

A. Qualifications—Manufacturer
   1. Component manufacturers shall be ISO 9001:2000 and offer RoHS-compliant products.
   2. Installers shall have a manufacturer certificate of completion for the fire stop solution being proposed.

B. Qualifications—Installer:
   1. At a minimum, seventy-five percent (75%) of the onsite Contractor field technicians shall be factory-certified within 12 months by the manufacturer of the selected telecommunications system components being installed. Proof of certification shall be available on-site for review for each field technician at all times.

C. Workmanlike Manner
   1. Installers shall address their job functions for this Scope of Work from the guidance provided by ANSI/NECA-1.
   2. Cable hangers, Saddles, Supports, and J-Hooks shall be routed inline and parallel to building lines.
      a. All cable routing shall maintain an "Above" approach to cabling when crossing any obstruction – Cable hangers shall be installed to support the cable bundle above and away from physical damage or electrical interference from accidental contact with the UTP cabling system.
      b. Cable hangers shall be installed on a minimum 3/8" threaded rod and installed at a uniform height above the finished floor wherever possible.
      c. Maintain a minimum 6" clearance above the finished ceiling.
      d. Cable hanger routing shall be identified on as-built conditions and record drawings.
   3. Cable hangers, Saddles, Supports, and J-Hooks shall be attached per the manufacturer's installation requirements and reviewed and confirmed with SEOR prior to rough-in.

4. Cable hangers shall be required to maintain the maximum cable bundle size for the different ratings of PoE (power rating) listed on the cable jacket.
5. Cable hangers are field-defined routing; therefore, all non-rated, fire-fated, acoustical-rated sleeves shall be the Contractor's responsibility for configuration, furnishing, install, and documentation of required sleeves.
6. This requirement includes manufacturer training for proper fire stop installation of technicians performing these installations

PART 2 - PRODUCTS (Not Applicable)

PART 3 - EXECUTION

3.1 EXAMINATION

A. Contractor shall review all drawings, data sheets, specifications, & **McFarland PD**-IT Standards and Specifications

3.2 POWERED CABLE, HYBRID POWERED OPTICAL FIBER, & POWER OVER ETHERNET (PoE)

A. Check the actual cable data sheets prior to starting any work. Ensure all data and Class 2, 3, and 4 power requirements are met for the project.

B. Methodology for PoE requirements that the Contractor shall comply with:
   1. Follow the Cable Usage Chart in the Drawings set (cover sheet)
   2. Confirm U/UTP cable bundle size (quantity of cables per dressed harness)

	Type 1	Type 2	Type 3	Type 4
Name	PoE	PoE+	PoE++ UPoE	High Power PoE
PoE Standard	IEEE 802.3af	IEEE 802.3at	IEEE 802.3bt	IEEE 802.3bt
Max. Power Per Port	15.4W	30W	60W	100W
Power to PD	12.95W	25.5W	51W	71.3W
Twisted Pair Used	2-Pair	2-Pair	4-Pair	4-Pair
Supported Cables	Cat5e	Cat5e	Cat6A	Cat6A
Typical Application	IP Phone	Video Phone	MGMT Device	LED Lighting

3.3 FIRE STOP REQUIREMENTS

A. Review and confirm that Section 270528 is part of this document set and included in this contract bid set as CPCI for this project. The information below shall also be reviewed to confirm that it applies. If not, provide an RFI for the text/terminology in question.

B. Check actual site conditions prior to the start of any work. Ensure all preceding trade work associated with the telecommunications system is accurate and complete before proceeding with the installation or use of products specified in this section.

C. Methodology for fire stop requirements that the Contractor shall comply with:
   1. In any area where a fire-rated wall, partition, floor, or ceiling is penetrated, the Contractor shall create the pathway and seal around all cables and sleeves with a UL-classified fire seal sufficient to return the structure to its original rating. Creation of such openings as are necessary for cable passage between locations as shown on the drawings shall be the Contractor's responsibility. Any opening in a rated structure created by the Contractor that is larger than one inch in diameter shall be equipped with a metal sleeve secured and fire-stopped in place.
   2. Comply with requirements in Section 07 84 13 "Penetration Firestopping."(Check Architect specifications for fire stopping)
   3. Comply with ANSI/TIA-569, Annex A, "Firestopping."
   4. Comply with BICSI TDMM, "Firestopping Systems" Article.

D. Sleeves for Conduits Penetrating Above-Grade Non-Fire-Rated Concrete and Masonry-Unit Floors and Walls:
   1. Interior Penetrations of Non-Fire-Rated Walls and Floors:
      a. Seal the annular space between the sleeve and pathway or cable, using joint sealant appropriate for the size, depth, and location of the joint. Comply with requirements in Section 07 92 00 "Joint Sealants."

b. Seal the space outside the sleeves with mortar or grout. Pack the sealing material solidly between the sleeve and wall so no voids remain. Smooth the tool's exposed surfaces; protect the material while curing.

2. Use pipe sleeves unless the penetration arrangement requires a rectangular-sleeved opening.
3. Size pipe sleeves to provide 1/4-inch annular clear space between sleeve and pathway or cable unless sleeve seal is to be installed or unless seismic criteria require different clearance.
4. Install sleeves for wall penetrations unless core-drilled holes or formed openings are used. Install sleeves during the erection of walls. Cut sleeves to length for mounting flush with both surfaces of walls. Deburr after cutting.
5. Install sleeves for floor penetrations. Extend sleeves installed in floors 4 inches above finished floor level. Install sleeves during the erection of floors for the building.

E. Sleeves for Conduits Penetrating Non-Fire-Rated Gypsum Board Assemblies:
1. Use circular metal sleeves unless penetration arrangement requires a rectangular sleeve opening.
2. Seal space outside of sleeves with approved joint compound for gypsum board assemblies.

3.4 RE-INSTALLATION

A. No additional burden to the **McFarland PD** regarding costs, network downtime, and end-user interruption shall result from the re-installation of specified components. Scheduling for re-installation work shall be coordinated, in writing, with the **McFarland PD** prior to beginning any re-installation work.

3.5 CLOSEOUT ACTIVITIES

A. The Contractor shall provide testing results and as-built conditions in the documentation of all telecommunications system components under this section utilized throughout the site for review and reference by the **McFarland PD** and A/E team.

B. The Contractor is to submit all as-built drawings and any test documentation required prior to acceptance by the **McFarland PD**.

END OF SECTION 270500

SECTION 270526 - GROUNDING BONDING FOR COMMUNICATIONS SYSTEMS

PART 1 - GENERAL

1.1 SUMMARY

A. Section Includes:
1. Specifications for grounding and bonding components utilized to provide proper grounding and bonding for telecommunications cabinets, racks, cable trays, ladder trays, cables, and equipment.
2. Grounding and bonding components with design criteria as a single manufacturer solution.

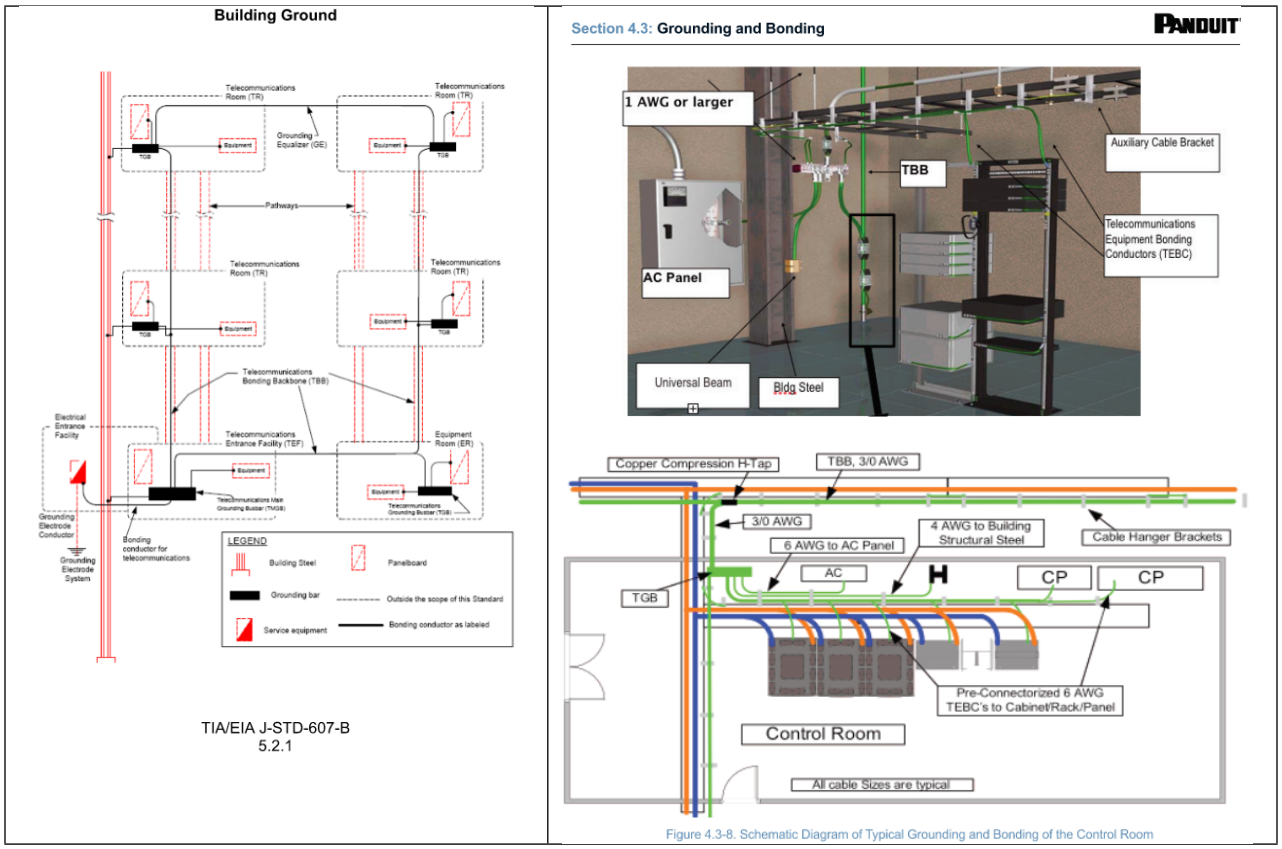

1.2 RELATED DOCUMENTS

A. Section 270500 and all divisions of the specification and general provisions of the Construction Documents.

B. Architectural, mechanical, electrical, and all technology drawings.

C. Refer to Structural Seismic Requirement design documents Specifications, if available, for Non-Structural Components for all structural bracing and support of telecommunications equipment.

1. Anywhere cabling Standards conflict with electrical or safety Codes, the Subcontractor shall defer to 2022-CEC and any applicable local codes or ordinances or default to the most stringent requirements listed by either.
2. Knowledge and execution of applicable codes is the sole responsibility of the Subcontractor.
3. Any code violations committed during installation shall be remedied at the Subcontractor's expense.

1.3 QUALITY ASSURANCE

A. Qualifications – Manufacturer
   1. Component manufacturers shall be ISO 9001:2000 and offer RoHS-compliant products.

B. Qualifications – Installer:
   1. The contractor shall coordinate the final TMGB connection with the project electrician.
   2. At a minimum, seventy-five percent (75%) of the onsite subcontractor-provided field technicians shall be factory-certified within 12 months by the manufacturer of the selected telecommunications system components being installed. Proof of certification shall always be available on-site for review for each field technician.

1.4 SUBMITTALS

A. Project Submittals – See Section 270500 Appendix A Project Submittals for contractor requirements for training validation, credentials, scaled shop drawings data sheet, and specialty product sample submittal(s) prior to site work.

B. Closeout Submittals - As-Built Drawings
   1. Submit all as-built drawings in accordance with the general requirements of the construction documents.
   2. Submit bonding and grounding project work from scaled Shop Drawings in the Revit model in addition to the other Div. 27 & 28 project submittal requirements.
   3. Submit as-built drawings a minimum of two (2) weeks after completion of all Division- 27 work for A/E and **McFarland** reference.

1.5 WARRANTY

A. Warranty:
   1. The contractor shall provide all extended warranty plans at no cost to the **McFarland**-IT Project Manager.
   2. The contractor shall warranty all workmanship per the manufacturer's required installation and attachment requirements.

Section 4.3: Grounding and Bonding

PANDUIT

Busbar Hardware Kit

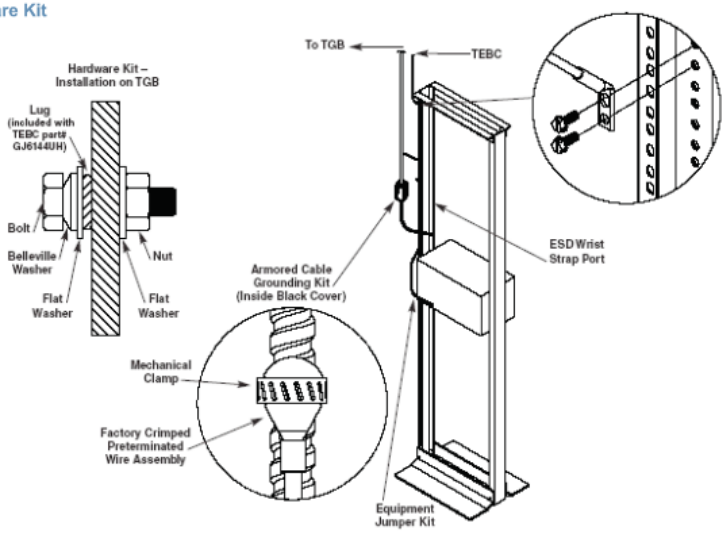

Figure 4.3-14. Busbar Hardware and Armored Fiber Grounding Kits

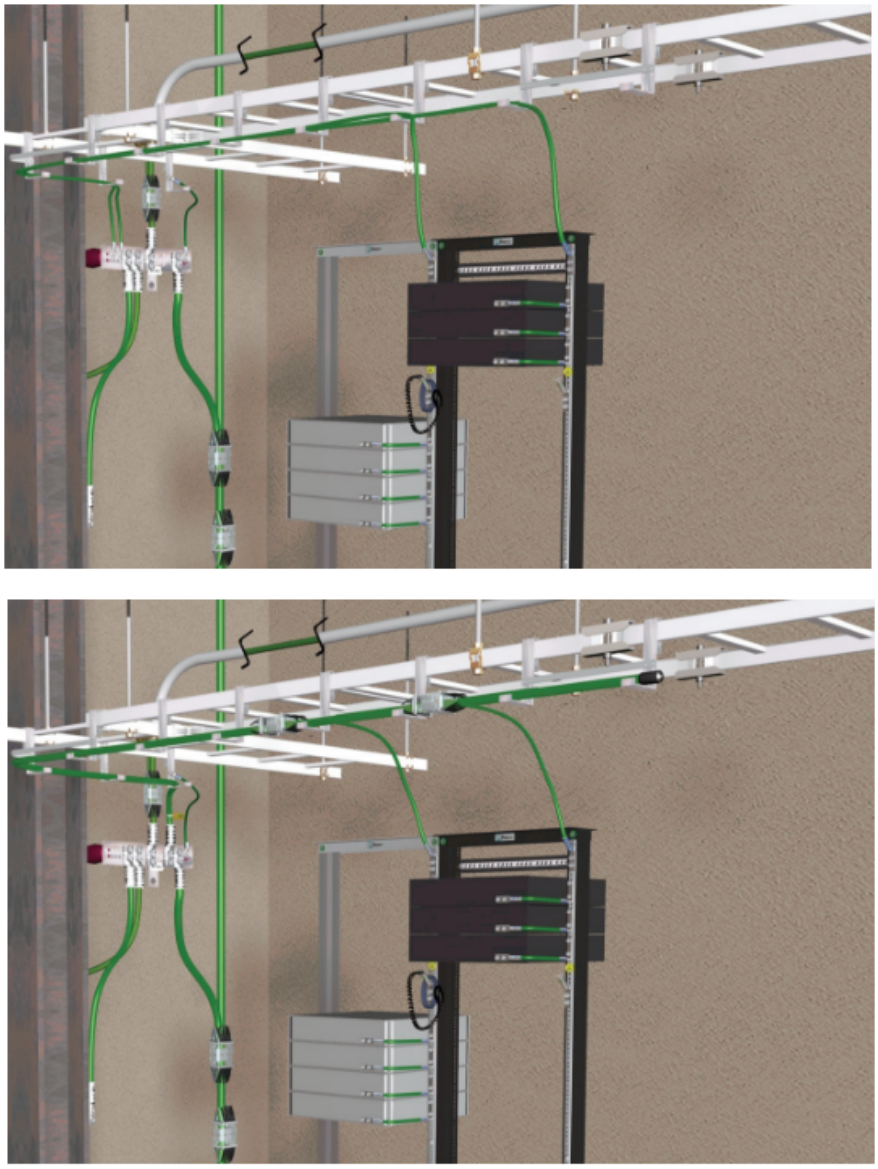

Figure 4.3-13. Telecommunications room bonding topologies (no access floor). Top – several TEBCs used to bond each rack directly to the TGB. Bottom – racks bonded to a single TEBC which then bonds to the TGB.

©2009 PANDUIT / Physical Infrastructure Reference Architecture Guide 1.0

PART 2 - PRODUCTS

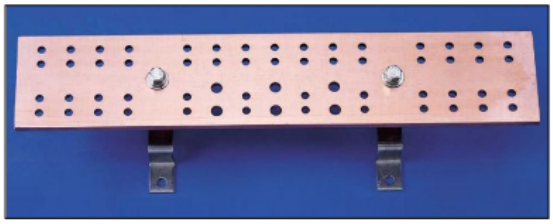

Figure 6-1
Example of a PBB

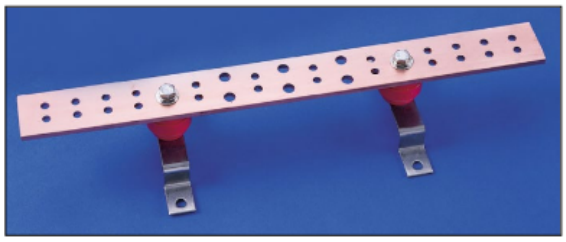

Figure 6-2
Example of an SBB

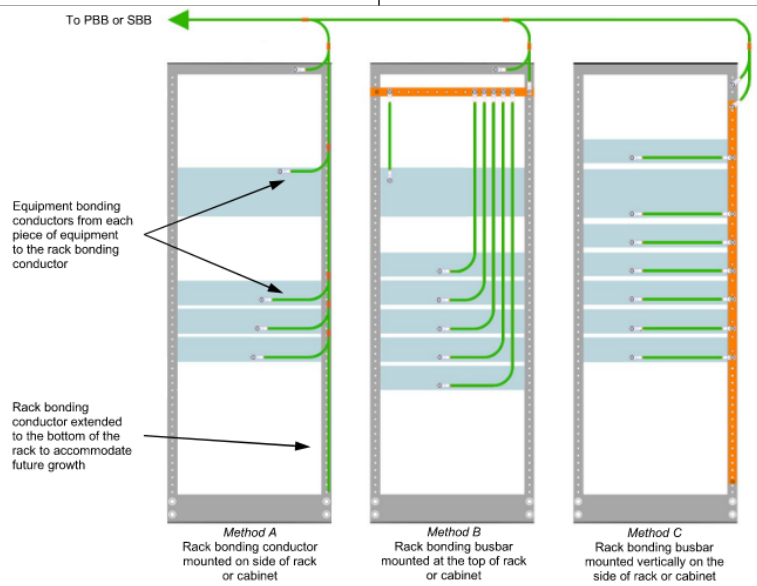

Figure 7-1
Example of Three Methods to Bond Equipment and Racks

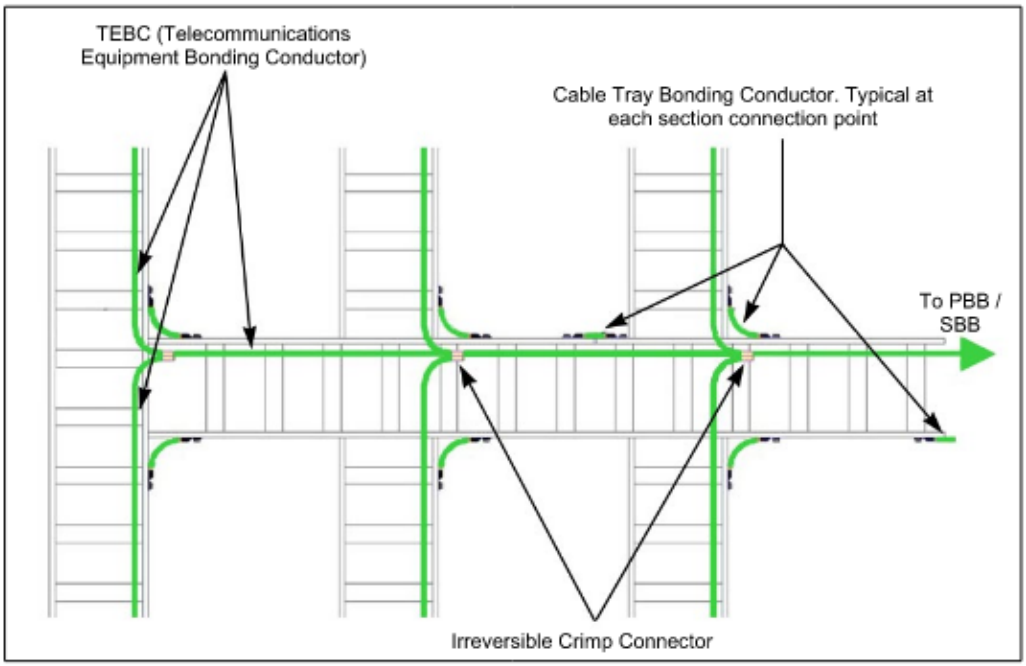

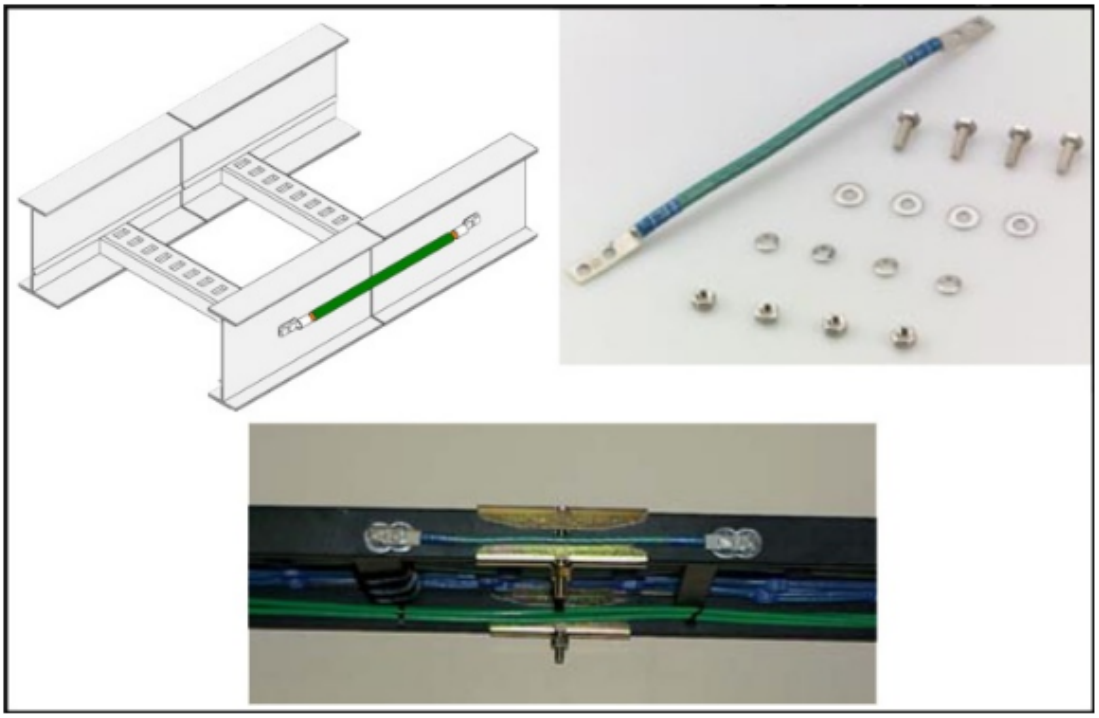

Figure 8-24
Example of a Bonding Jumper and its Installation Between Cable Tray Segments

2.1 GROUNDING AND BONDING SOLUTION

A. **McFarland**-IT Standards and Specifications: Subject to compliance with requirements, provide the manufacturer or comparable product by one of the following:
   1. Panduit

2. **McFarland**-IT Approved Equal

B. Product Options:
1. The indicated manufacturers shall be the basis of the design, and each component selected shall address the infrastructure requirement.
2. All assembly components shall be from a single manufacturer's solution for the size of the telecommunications space it is being designed for.

C. Description:
1. The Subcontractor is responsible for bonding to ground all newly placed equipment and installed racks or cabinets per the ANSI/TIA 607, ANSI/BICSI-N3, & Panduit Bonding & Grounding Equipment Installation Requirements. All systems and assemblies shall comply with 2022-CEC Article 250 & Chapter 8.

PART 3 - EXECUTION

3.1 EXAMINATION

A. Check actual site conditions before the start of any work. Ensure all preceding trade work associated with the telecommunications system is accurate and complete before proceeding with installing or using products specified in this section.

SPECIFICATION STANDARD
GROUNDING AND BONDING 27 05 26

1. Green insulated copper conductor, minimum as specified in the table below, size 6 AWG. The TBB shall be sized at 2 kcmil per linear foot of conductor length up to a maximum size of 3/) AWG Insulation shall meet fire ratings of its pathway.

TABLE 1			
Sizing of Telecommunication Bonding Backbone (TBB)			
TBB length FT	**Grounding Conductor Size (AWG)**	**DC Resistance Per 100 Ft (Copper Conductor)**	**Short-Time Rating (A)**
	8	0.0778	391
< 13 Ft	6	0.0491	621
14 - 20 Ft	4	0.0308	988
21 -26 Ft	3	0.0245	1245
27 - 33 Ft	2	0.194	1571
34 - 41 Ft	1	0.0154	1981
42 - 52 Ft	1/O	0.0122	2499
53 - 66 Ft	2/O	0.00967	3150
> 66 FT	3/O	0.00766	3972
	4/O	0.00608	5008
	Kcmil		
	250	0.00515	5917
	300	0.00429	7101
	350	0.00367	8284
	400	0.00321	9467
	500	0.00258	11834
	AWG = American Wire Gauge		
	DC = Direct Current		
	kcmil = Thousand circular mils		

3.2 INSTALLATION

A. Process:
   1. All newly installed racks and cabinets shall have installed a vertical busbar mounted along one equipment rail to serve as a clean, low-resistance bonding place for any equipment not equipped with a designated grounding pad.
   2. Smaller equipment without an integrated grounding pad shall be bonded to the vertical busbar using an anodized green thread-forming grounding screw that includes serrations under the head to cut through oxidation or paint on the equipment flange.
   3. Larger equipment (chassis switches) with a designated grounding terminal shall be bonded to the vertical busbar with an EBC (equipment bonding conductor) kit built for that purpose.
   4. All grounding wire shall be a minimum #6 AWG stranded annealed ground wire; PVC sheathed with nylon. Meets UL83 for THHN or THWN and UL1063.

5. All OSP cabling terminated within the new campus MDF shall be terminated to a Building Entrance Terminal with gas fuses.
6. The Subcontractor shall clean (wire brush, scotchbrite pads) any metallic surface to be bonded down to bare metal and apply a film of anti-oxidation paste to the surfaces before effecting the bond.
7. All bonding lugs on racks and busbars shall be of two-hole irreversible compression type. Mechanical and single-hole lugs will not be accepted and shall be removed and replaced at the Subcontractor's expense.
8. Every rack or cabinet shall have an individual bonding conductor in the grounding network. Serially connecting (daisy-chaining) racks is forbidden and will not be accepted.
9. Rack Bonding Conductors (RBC) may tap into an overhead or underfloor aisle ground or run to the wall-mounted grounding busbar in smaller Telecommunications rooms containing five racks or less.
10. Armored cables shall be properly bonded to the earthing system with a kit built for that purpose.
11. All metallic conduit stub-ups shall be grounded. Where multiple stub-ups are made within an equipment enclosure, they shall be equipped with grounding bushings and bonded to the enclosure and the enclosure ground bus.
12. Each metallic raceway, pipe, duct, and other metal object entering the buildings shall be bonded together. The Subcontractor shall use #6 AWG green-insulated copper conductors.
13. Each identified telecommunications space within a building shall have a common signal reference ground. The signal reference ground shall conform to the following:
    a. Within the building, all communication spaces shall be separately bonded to each other and connected to the primary building ground in accordance with the provisions of EIA/TIA 607. The communication ground shall not ground any additional equipment or be connected to any potential high-voltage source. All racks, frames, drain wires, and all installed communication equipment shall only be grounded to this common reference ground with a minimum size #6 AWG green insulated copper wire.
    b. The Sub-contractor shall provide, as a minimum, a continuous #3/0 AWG copper electrical conductor connected to a 1/4" x 4" x 12" telecommunications grounding bus bar (TGB) 6" AFF on the plywood backboard of each IDF (or telecommunication space) to terminate chassis and other equipment grounds.
    c. The ground wires from each IDF shall be routed directly to the Building Distribution Frame (BDF), terminated, and bonded together via a telecommunications main grounding bus bar (TMGB) of minimum 1/4" x 4" x 20" dimensions. This point of single reference for all closets in a building shall, in turn, be grounded with a minimum #3/0 AWG ground conductor to the main building ground. If a main building ground is unavailable, the ground wire from the BDF shall be grounded to the nearest electrical panel ground bus bar. The building ground for signal reference shall be the building service entrance ground.
14. Ground Bus Bar Identification.
    a. The master ground bar shall be labeled as such.
    b. Each subsidiary ground bar shall be labeled as such and have a unique identifier.
    c. All ground bars shall have a warning label that states, "If this connector or cable is loose or shall be removed, please call the Telecommunications Manager." All ground bars will be connected to the building ground with continuous "3/0" AWG wire.
    d. Each ground cable shall be labeled with a unique identifier.

3.3 RE-INSTALLATION

A. No additional burden to the **McFarland** regarding costs, network downtime, and end-user interruption shall result from the re-installation of specified components. Scheduling for re-installation work shall be coordinated, in writing, with the **McFarland** before beginning any re-installation work.

ANSI/TIA-607-B

ANNEX E (INFORMATIVE) CROSS REFERENCE OF TERMS

Preferred terms used in this Standard	Other industry terms
Telecommunications Main Grounding Busbar (TMGB)	Building Principal Ground (BPG) CO GRD Bus COG Facility Ground Main Earthing Terminal (MET) Master Ground Bar (MGB) OPGPB PGP Bus Principal Ground Point (PGP) Reference Point 0 (RP0) Zero Potential Reference Point)
Telecommunications Grounding Busbar (TGB)	Extended Reference Point 0 (Extended RP0) Floor Ground Bar (FGB) Approved Floor Ground
Telecommunications Bonding Backbone (TBB)	Equalizer Equalizing Conductor Grounding Equalizer (GE) Vertical Equalizer Vertical Ground Riser
Grounding Equalizer (GE)	Horizontal Equalizer

3.4 CLOSEOUT ACTIVITIES

A. Sub-contractor shall provide documentation of all telecommunications system components under this section utilized throughout the site for review and reference by the **McFarland** and A/E team.

B. Sub-contractor to submit all as-built drawings and any test documentation required before acceptance by the **McFarland**.

END OF SECTION 270526

SECTION 270529 - HANGERS AND SUPPORTS FOR COMMUNICATIONS SYSTEMS

PART 1 - GENERAL

1.1 SUMMARY

A. Section Includes:
   1. Provides specifications for non-continuous cable support components utilized to provide pathways support to telecommunications cables traveling outside cable trays, conduits, or other continuous cable supports.
   2. Non-continuous cable supports.

1.2 RELATED DOCUMENTS

A. Section 270500 and all divisions of the specification and general provisions of the Construction Documents.

B. Architectural, mechanical, electrical, and all technology drawings.

C. Refer to Structural Seismic Requirement design documents Specifications, if available, for Non-Structural Components for all structural bracing and support of telecommunications equipment.
   1. Anywhere cabling Standards conflict with electrical or safety Codes, Sub-contractor shall defer to NEC and any applicable local codes or ordinances, or default to the most stringent requirements listed by either.
   2. Knowledge and execution of applicable codes is the sole responsibility of the Sub-contractor.
   3. Any code violations committed at the time of installation shall be remedied at the Sub-contractor's expense.

1.3 QUALITY ASSURANCE

A. Qualifications – Manufacturer
   1. Component manufactures shall be ISO 9001:2000 and offer products that are RoHS compliant.

B. Qualifications – Installer:
   1. At a minimum, seventy-five percent (75%) of the onsite sub-contractor provided field technicians shall be factory certified within 12 months by the manufacturer of the selected telecommunications system components being installed. Proof of certification shall be available on site for review at all times for each field technician.

1.4 WARRANTY

A. Warranty:

1. Sub-contractor shall provide a 25 year System Warranty on all copper and fiber permanent cabling links.
2. This is a system performance warranty guaranteeing for 25 years from acceptance that the installed system shall support all data link protocols for which that copper Category or fiber OM/OS designation is engineered to support according to IEEE and TIA standards.
3. The System Warranty may be invoked only if the cabling channel links are comprised of approved cable infrastructure connectivity and approved cable. Patch cords must be manufactured by same approved cable and/or connectivity system.
4. Upon acceptance of Warranty, manufacturer will mail a notification letter to the installer and a notification letter and warranty certificate to A/E.

PART 2 - PRODUCTS

2.1 NON-CONTINUOUS CABLE SUPPORTS

A. Basis-of-Design Product: Subject to compliance with requirements:
   1. Erico – Caddy CableCat Support System
   2. Copper/BLine – Cable Hook System
   3. CEAS Attachments – Stiffy Series
   4. Or approved equal

B. Product Options:
   1. The indicated manufacturers shall be the basis of the design and each component selected shall address the particular infrastructure requirement.
      a. Stiffy Series 200 with comfort cradle Low Voltage supports
      b. Four inch (0’4”) Cat214z34, two inch (0’2”) J-Hook Supports Cat324z34

C. Description:
   1. Non-continuous cable supports shall be available in multiple sizes, styles and materials. Rigid supports shall be equipped with flared edges and pre-configured bend radius controls.
   2. Provide drop wire supports and threaded rod assemblies in areas where structural mounting surfaces are non-functional or inaccessible.
   3. Support assemblies shall provide a bearing surface of sufficient width to comply with required bend radii of high-performance UTP and optical fiber cables.
   4. Non-continuous cable supports sized 1 5/16” and larger shall have a cable retainer strap to provide containment of cables within the hanger. The cable retainer strap shall be reusable.
   5. Select approved non-continuous cable supports suitable for specific installation environments and/or air handling (plenum) spaces.

PART 3 - EXECUTION

3.1 EXAMINATION

A. Check actual site conditions prior to start of any work. Ensure all preceding trade work associated with the telecommunications system is accurate and complete before proceeding with installation

or use of products specified in this section.

3.2 INSTALLATION

A. Process:
   1. Follow manufacturer's instructions and recommended industry standards and guidelines.
   2. The installed non-continuous support system must be an independent support structure for the voice/data communication system.
   3. Draping cables over other structures in the ceiling is unacceptable. Water pipes, ceiling grid, sprinkler system, electrical supports, air ducts or any other in-ceiling structure may not be used for cable support.
   4. Sub-contractor installed supports shall be used to supplement the main cable support system when any cabling leaves the main support system or is unsupported for more than three and one half feet (3'-5'-0") feet.
   5. Non-continuous supports shall be installed with rod stock or threaded rod secured to the slab above to support the telecommunications cable infrastructure parallel to the slab throughout the cable plant, unless site conditions dictate a non-parallel installation.
   6. Cable must be routed to follow existing corridors and parallel or 90 degree angles from all walls and the cable tray whenever possible.
   7. Communication EMT conduit sleeves shall receive conduit waterfall to control bend radius of the communication cable to a minimum of a 4" radius.
   8. All pathways shall avoid electromagnetic interference (EMI). Cable that is distributed in partially-enclosed metallic pathways shall be routed with the following minimum clearances:
      a. Four (4) feet from motors or transformers.
      b. One (1) foot from conduit and cables used for electrical power and distribution.
      c. Five (5) inches from fluorescent lighting.

3.3 RE-INSTALLATION

A. No additional burden to the owner regarding costs, network down-time, and end user interruption shall result from the re-installation of specified components. Scheduling for re- installation work shall be coordinated, in writing, with the owner prior to beginning any re- installation work

3.4 CLOSEOUT ACTIVITIES

A. Sub-contractor shall provide documentation of all telecommunications system components under this section utilized throughout the site for review and reference by the Owner and A/E team.

B. Sub-contractor to submit all as-built drawings and any test documentation required prior to acceptance by the Owner

END OF SECTION 270529

SECTION 270533 - CONDUITS AND BACKBOXES FOR COMMUNICATIONS SYSTEMS

PART 1 - GENERAL

1.1 SUMMARY

A. Section Includes:
   1. Provides specifications for conduit pathways, back boxes, and pull box enclosures utilized for the distribution and housing of telecommunications cabling and components:
   2. Telecom EMT conduit and boxes shall be installed per Chapter 3 of the 2022-CEC. The conduit installation requirements shall include the following:
      a. Shorter distances between pulling points - required cable maximum pulling-tensions.
      b. Factory sweeps at changes of direction – required from **McFarland**-IT standard cable manufacturer's requirements.
      c. Industry best practices for low-voltage/signal cabling. Cable fill shall follow ANSI-recognized cable quantities maximum-fill of 40% for 0.265" outside diameter CMP cable.

1.2 RELATED DOCUMENTS

A. Section 270500 and all divisions of the specification and general provisions of the Construction Documents.

B. Architectural, mechanical, electrical, and all technology drawings.

C. Refer to Structural Seismic Requirement design documents Specifications, if available, for Non-Structural Components for all structural bracing and support of telecommunications equipment.
   1. Anywhere cabling Standards conflict with electrical or safety Codes, the Subcontractor shall defer to 2022-CEC and any applicable local codes or ordinances or default to the most stringent requirements listed by either.
   2. Knowledge and execution of applicable codes is the sole responsibility of the Subcontractor.
   3. Any code violations committed during installation shall be remedied at the Subcontractor's expense.

1.3 QUALITY ASSURANCE

A. Qualifications – Manufacturer
   1. Component manufacturers shall be ISO 9001:2000 and offer RoHS-compliant products.

B. Qualifications – Installer:
   1. The contractor shall coordinate the final TMGB connection with the project electrician.
   2. At a minimum, seventy-five percent (75%) of the onsite subcontractor-provided field technicians shall be factory-certified within 12 months by the manufacturer of the selected

telecommunications system components being installed. Proof of certification shall always be available on-site for review for each field technician.

1.4 SUBMITTALS

A. Project Submittals – See Section 270500 Appendix A Project Submittals for contractor requirements for training validation, credentials, scaled shop drawings data sheet, and specialty product sample submittal(s) prior to site work.

B. Closeout Submittals - As-Built Drawings
   1. Submit all as-built drawings in accordance with the general requirements of the construction documents.
   2. Submit bonding and grounding project work from scaled Shop Drawings in the Revit model in addition to the other Div. 27 & 28 project submittal requirements.
   3. Submit as-built drawings a minimum of two (2) weeks after completion of all Division- 27 work for A/E and **McFarland** reference.

1.5 WARRANTY

A. Warranty:
   1. The contractor shall provide all extended warranty plans at no cost to the **McFarland**-IT Project Manager.
   2. The contractor shall warranty all workmanship per the manufacturer's required installation and attachment requirements.

PART 2 - PRODUCTS

2.1 CONDUIT AND BACKBOXES

A. EMT/IMT Conduit
   1. Wheatland Tube
   2. Appleton
   3. Crouse-Hinds
   4. Or **McFarland**-IT approved equal.

B. RMC Conduit
   1. American Conduit
   2. Electro Flex
   3. Or **McFarland**-IT approved equal.

C. Pull Boxes
   1. Hoffman Engineering Co (aka NVent)
   2. Or **McFarland**-IT approved equal.

D. Back Boxes
   1. Hubbell Raco

2. Or **McFarland**-IT approved equal.

2.2 TELECOMMUNICATIONS CONDUIT AND BACKBOXES

A. Electrical Metallic Galvanized Tubing and Fittings with a natural finish for all conduits not exposed: ANSI C80.3 with compression-type fittings.

B. Communication EMT conduit sleeves shall receive conduit waterfall to control the bend radius of the communication cable to a minimum of a 4” radius.

C. Indoor Pull boxes: Galvanized steel, screw cover pull box. Grey polyester powder coat finishes inside and out. NEMA Type 1. Pull boxes will be sized per 2022-CBC code to accommodate the number of EMT conduits shown on Telecom drawings with adequate clearances, access, and cable management space.

D. Supporting devices: U-channel trapeze assemblies, 3/8”, 1/2”, & 5/8” Threaded rods, clamps, conduit straps, C-clamps, and retainers.

E. Fasteners: 3/8” Carbon steel expansion anchors with 2 ½” embed into the concrete slab for pull box U-channel support attachment to a concrete slab. The anchors must be tested and approved under dual load conditions: Hilti Kwikbolt 2, Ramset/Redhead Trubolt. Or **McFarland**-IT approved equal.

F. U-channel systems: 16-gauge steel channels. Provide fittings and accessories that match the U-channel of the same manufacturer.

PART 3 - EXECUTION

3.1 EXAMINATION

A. Check actual site conditions before the start of any work. Ensure all preceding trade work associated with the telecommunications system is accurate and complete before proceeding with the installation or use of products specified in this section.

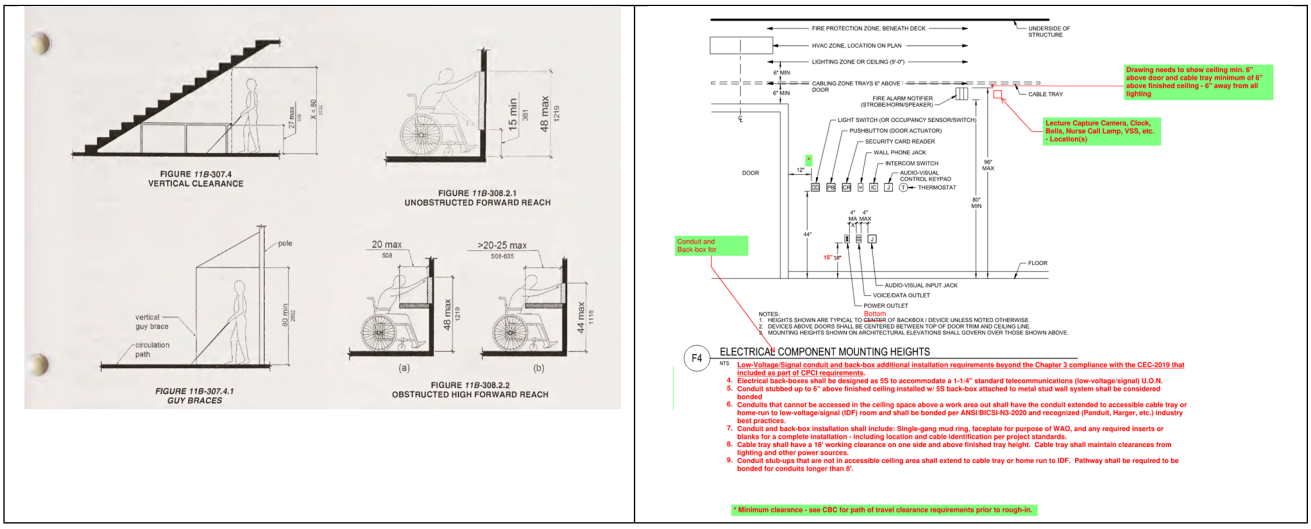

3.2 INSTALLATION

A. Pull boxes:
   1. Install Pull boxes in easily accessible locations.
   2. Install Horizontal cabling boxes immediately above suspended ceilings.
   3. A pull box should not be used in lieu of a bend.
   4. Conduits that enter the pull box from opposite ends with each other should be aligned.
   5. For direct access to a box located above inaccessible ceilings, provide a suitable, marked, hinged access panel (or equivalent) in the ceiling. This access panel can also serve as the cover for the box.
   6. Install conduit radius waterfall for all EMT conduit sleeves entering the telecommunication room or through main pathway fire-rated walls, quantity as shown on drawings.
   7. Pull box sizing table:

Table 5.12
Typical space requirements for pull boxes having conduit enter at opposite ends of the box

Conduit Trade Size ≈ mm (Trade Size)	Box Width ≈ mm (in)	Box Length ≈ mm (in)	Box Depth ≈ mm (in)	Box Width Increase for Each Additional Conduit ≈ mm (in)
27 (1)	100 (4)	400 (16)	75 (3)	50 (2)
35 (1-1/4)	150 (6)	508 (20)	75 (3)	75 (3)
41 (1-1/2)	200 (8)	686 (27)	100 (4)	100 (4)
53 (2)	200 (8)	900 (36)	100 (4)	125 (5)
63 (2-1/2)	250 (10)	1067 (42)	125 (5)	150 (6)
78 (3)	300 (12)	1220 (48)	125 (5)	150 (6)
91 (3-1/2)	300 (12)	1370 (54)	150 (6)	150 (6)
103 (4)	375 (15)	1525 (60)	200 (8)	200 (8)

B. Back Boxes
   1. Provide 4-11/16" H X 4-11/16" W X 2-1/8" D outlet back boxes at all telecom outlet locations shown on drawings. Provide (1) 1-1/4" conduit from back box to telecom room

or pull box except as otherwise noted. All connectors and couplings shall be zinc-plated steel set screw type. Die-cast zinc fittings are not to be used. Provide bushing on the ends of all conduits. Provide pull string in all conduits.

2. Provide single gang plaster ring on all communications outlet back boxes unless indicated otherwise.
3. Provide bonding to cable tray pathways.

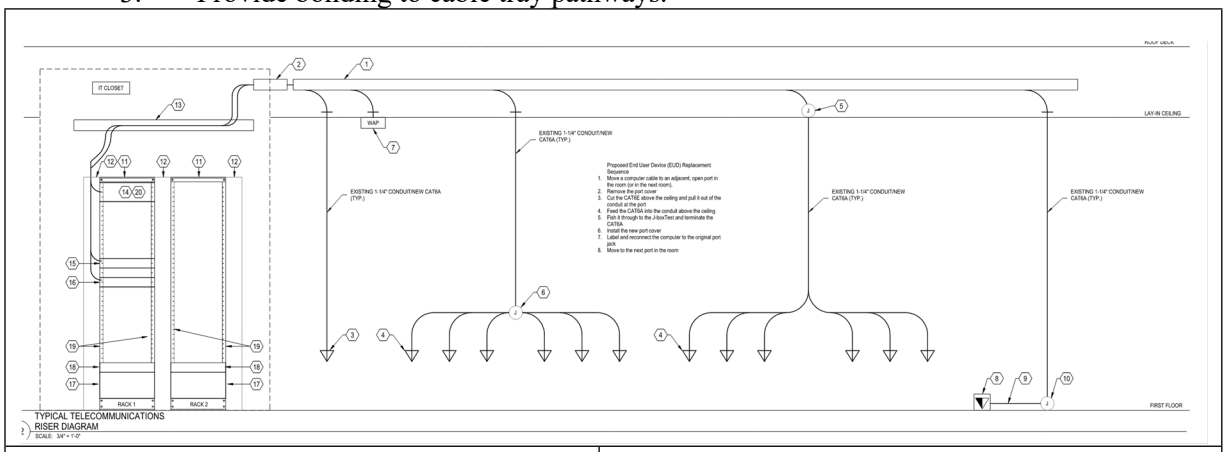

KEYNOTES

1. NEW WIRE BASKET STYLE CABLE TRAY FOR HORIZONTAL TELECOMMUNICATIONS CABLING MOUNTED ABOVE LAY-IN CEILING. PROVIDE SIZE PER MANUFACTURERS RECOMMENDATION BASED ON TOTAL CABLE COUNT AND SPACE SUPPORT TO NOT EXCEED MAXIMUM LOADING.
2. PROVIDE NEW HILTI SPEED SLEEVE OR EQUIVALENT SIZED PER THE TOTAL NUMBER OF CAT 6A CABLES ROUTED TO THE SPACE AND RATED FOR THE EXISTING WALL ASSEMBLY. CONTRACTOR SHALL SUBMIT SPECIFIC COMPONENTS BASED ON THE ACTUAL NUMBER OF DATA CIRCUITS BEING PROVIDED.
3. NEW TELECOMMUNICATIONS OUTLET BOX WITH EXISTIING 1-1/4" EMT STUB UP TO NEAREST ACCESSIBLE CEILING SPACE. REFER TO DETAILS ON SHEET T-501 AND SCHEDULE ON SHEET T-701 FOR ADDIONAL INFORMATION.
4. NEW TELECOMMUNICATIONS OUTLET. DATA CABLES TO BE ROUTED TO JUNCTION BOX TO BE STUBBED UP TO ACCESSIBLE CEILING SPACE.
5. EXISTING CEILING MOUNTED JUNCTION BOX FOR DATA CABLES, PROTECT IN PLACE. ROUTE CABLES FOR TELECOMMUNICATIONS OUTLET THROUGH WALL TO FURNITURE SYSTEM. PROVIDE PROPER WIRE MANAGEMENT.
6. EXISTING RECESSED JUNCTION BOX FOR FURNITURE SYSTEM DATA CABLES TO BE ROUTED TO ACCESSIBLE CEILING SPACE, PROTECT IN PLACE.
7. EXISTING WIRELESS ACCESS POINT WITH TELECOMMUNICATIONS OUTLET ABOVE CEILING, PROTECT IN PLACE.
8. NEW COMBINATION POWER/DATA IN-FLOOR WIREWAY DEVICE. COORDINATE FINAL FINISHES WITH COR PRIOR TO COMMENCEMENT OF ANY WORK.
9. EXISTING IN-FLOOR WIREWAY SEGMENT FOR POWER WIRING AND DATA CABLES. CONNECTS POWER/DATA DEVICE TO WALL BASE TRIM.
10. EXISTING WALL BASE TRIM TRANSITIONS CABLING AT THE WALL, PROTECT IN PLACE.
11. NEW 4 POST EQUIPMENT RACK, FREESTANDING, STEEL, PROTECT IN PLACE. TELECOMUNICATIONS CHANEL RACK, 19" RAILS, #12-24 TAPED EIA HOLE PATERN, 30" DEP CHANEL MINIMUM, 7' HIGH, 45RU, WHITE.
12. NEW 6" VERTICAL WIRE MANAGEMENT SYSTEM, PROTECT IN PLACE.
13. NEW 12" LADDER STYLE HORIZONTAL CABLE TRAY MOUNTED ABOVE RACKS, PROTECT IN PLACE. COORDINATE WITH LIGHTING FIXTURE LOCATIONS.
14. NEW 4U OPTICAL FIBER TERMINATION SHELF WITH (2) NEW 12F SM AND (2) NEW 12F MM WITH CABLE MANAGEMENT IN BREAKOUT ENCLOSURE WITH CAPACITY FOR FOR 48 STRANDS SM OPTICAL FIBER AND 48 STRANDS MULTI-MODE FIBER.
15. NEW CAT 6A 48 PORT DATA PATCH PANEL. CONTRACTOR TO SUBMIT NEW RACK ELEVATION FOR VA/AE REVIEW PRIOR TO COMMENCING WORK.
16. NEW CAT 6A48 PORT VOICE PATCH PANEL. CONTRACTOR TO SUBMIT NEW RACK ELEVATION FOR VA/AE REVIEW PRIOR TO COMMENCING WORK.
17. NEW 5KW RACK-MOUNTED 208 V UNINTERRUPTIBLE POWER SUPPLY (UPS) WITH NEMA 20A L21-20P INPUT AND L21-20R OUTPUT. SEE T-502 FOR MORE DETAILS.
18. NEW "ZONEIT" 30A 3-PHASE PDU BASE UNIT, REQUIRES (2) 30A 3-PHASE WYE CIRCIRCUITS WITH L21-30R RECEPTACLES. SEE T-502 FOR MORE DETAILS.
19. NEW ORTRONICS POWER DELIVERY UNIT (PDU), BASIS OF DESIGN RO-MM20PDUMB1D2W-B OR EQUAL. SEE T-502 FOR MORE DETAILS.
20. PROVIDE NEW FIBER CANS IN THE TELECOM ROOMS WILL BE RACK MOUNTED, AND STACKED.

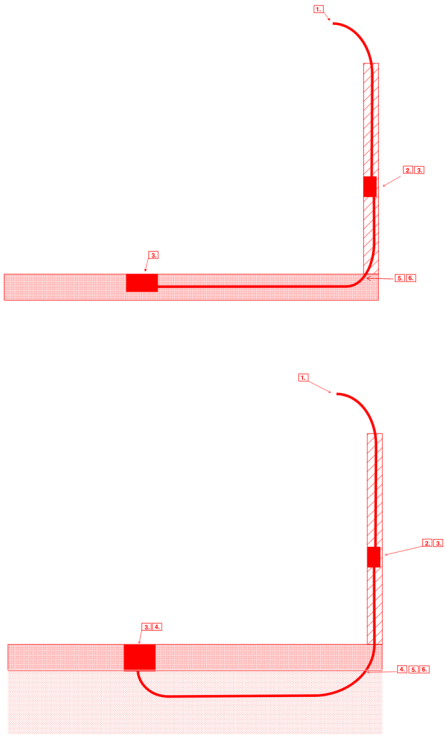

1. Conduit that does not have clear access shall extend to cable tray or home-run to IDF.
2. Location (AFF) of back-box is dependent on use:
   1. - DBB - 65" UON
   2. - MIP - 42" (center)
   3. - MUTOA/CP - 18" UON
   Note:
   Conduit back-box attached to metal-studs is considered bonded per this design standard
3. Conduits terminations are required to be fitted with non-snag bushings and within floor boxes and pedestals require bonding rings.
4. Cabling is required to transition from a rated jacket to a moisture-blocking jacket at a termination that is ANSI/TIA-569-D approved.
5. Conduit 90-degree segments shall be factory sweeps at 10x OD of conduit.
6. Conduits that require more than 180-degrees in change of direction shall be required to be de-rated cable fill capacity by:
   - >12-15% - 270-degrees total
   - >18-25% - 315-degrees total
   - Maximum distance of de-rated conduits shall not exceed 150' between pulling points
   Notes:
   - Cable manufactures maximum pulling tension shall be followed for all pulls
   - Factory terminated specialty cables (HDMI, USB, OF-connectors) are recommended to be installed during a single event
   - Future pulls is not recommended in non-standard conduits with active service

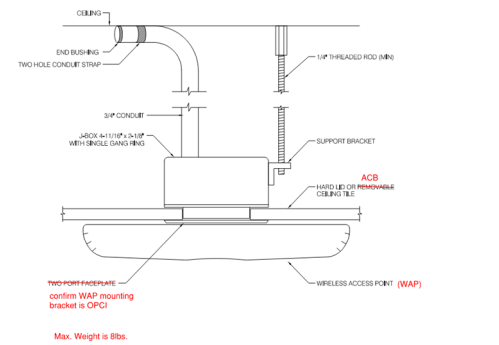

1 CEILING MOUNTED WIRELESS ACCESS POINT
NO SCALE Notes:

1). Cable(s) terminated in 2-port surface jack assembly or field terminated plug requires MFG 10G Testing
2). Provide (1) Cat6A 10G 6" Equipment-Cord and (1) Cat6A 10G 10' Patch-Cord per WAP Connection

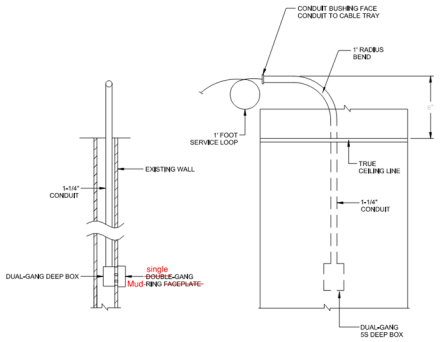

3 TYPICAL OUTLET CONCEALED CONDUIT TO ACCESSIBLE CEILING
NO SCALE Notes:

1). Back Box shall be placed to meet access requirements of this project
2). Back Box w/ (1) Stick of Conduit is considered bonded by attached to metal stud
3). Work Area Outlet that in not in accessible ceiling area shall be required for conduit to extend to cable tray or home run to IDF. Includes additional bonding requirements.

C. Conduit support and bracing:
   1. Coordinate layout and installation of conduits and pull boxes with other trade conditions to ensure adequate clearances, access, and cable management.
   2. Install and provide support for EMT conduits and pull boxes in accordance with the latest edition of the NEC code, as well as all state and local codes and requirements. Coordinate installation and location with existing conditions. Notify and get the **McFarland** Representative's approval before installing conduits and pull boxes where the location needs to deviate from the contract documents.
   3. Install conduits above ceilings at height to provide access to pull. Install conduits and pull boxes level and square and at proper elevations. Ensure adequate clearances, access, and cable management.
   4. Use fittings and support devices compatible with conduits and pull boxes suitable for use and location. The strength of each support shall be adequate to carry present and future loads multiplied by a safety factor of at least four.
   5. Install individual and multiple trapeze hangers and riser clamps as necessary to support the conduits. Provide U-bolts, clamp attachments, and other hardware needed for hanger assemblies and for securing hanger rods and conduits. Space supports for conduits on maximum 10-foot centers.
   6. Provide and install expansion or deflection fittings for conduits runs at all instances at seismic or expansion joints to allow for movement in any direction.

D. Conduit routing bends and radius guidelines:
   1. If the conduit has an internal diameter of 2 inches or less, the bend radius must be at least 6 times the internal conduit diameter.
   2. If the conduit has an internal diameter of more than 2 inches, the bend radius must be at least 10 times the internal conduit diameter.
   3. Conduit bends should be smooth, even, and free of kinks or other discontinuities that may have detrimental effects on pulling tension or cable integrity during or after installation.

4. If a conduit run requires more than two 90-degree bends, provide a pull box between sections with two bends or less.
5. If a conduit run requires a reverse bend (between 100 degrees and 180 degrees), insert a pull point or pull box at each bend with an angle from 100 degrees to 180 degrees.
6. Consider an offset as equivalent to a 90-degree bend.
7. A pull box shall not be used as a 90-degree bend.
8. Communication EMT conduit sleeves shall receive conduit waterfall to control bend radius of the communication cable to a minimum of a 4” radius.
9. Achieve the best direct route with no bend greater than 90 degrees or an aggregate of bends more than 180 degrees between pull points or pull boxes.
10. Contain no continuous sections longer than 100 ft.
11. Pull points or pull boxes should be inserted for runs that total more than 100 ft. in length so that no segment between points/boxes exceeds the 100 ft. limit.
12. Withstand the environment to which they will be exposed.
13. Conduits should not be routed through areas where flammable material may be stored or over or adjacent to boilers, incinerators, hot-water lines, and steam lines.
14. Keep conduits at least 6’ away from parallel runs of steam, hot water pipes, or mechanical ductwork.

E. Conduit Terminations

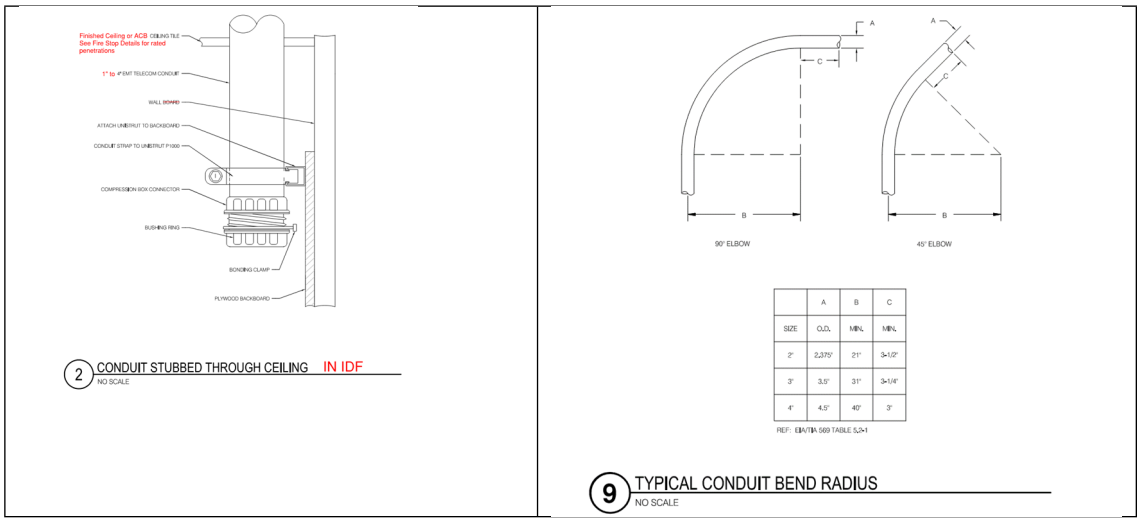

	A	B	C
SIZE	O.D.	MIN.	MIN.
2"	2.375"	21"	3-1/2"
3"	3.5"	31"	3-1/4"
4"	4.5"	40"	3"

1. Join conduits with fittings designed and approved for the purpose. Make the joints tight without protruding lips that can snag cable pulling inside the conduits.
2. Where conduits are terminated with locknuts and bushings, align the conduit to enter squarely and install the locknuts with dished part against the box. Use two locknuts, one inside and one outside the box.
3. Ream all conduit ends and fit them with an insulated bushing to eliminate sharp edges that can damage cables during installation or service.
4. Conduits that enter a telecom room should terminate near the corners to allow for proper cable racking.
5. Terminate conduits that protrude through the structural floor 3 inches above the surface.
6. Maintain the integrity of all fire stop barriers for all floor or wall penetrations.

F. Provide grounding and bonding for conduits and pull boxes as indicated by NEC code and instructed by the manufacturer.

G. Conduits shall be clearly labeled at both ends designating the opposite locations(s) served. The numbering scheme shall be a room number plus a suffix to guarantee uniqueness, e.g., 143-1. Labeling must be machine-generated.

H. Conduit Protection:
   1. Remove burrs, dirt, and construction debris from conduits and pull boxes.
   2. Conduits should be left capped for protection.
   3. Provide final protection and maintain conditions in a manner acceptable to the **McFarland** Representative to ensure that coatings, finishes, and pull boxes are without damage or deterioration at completion. Repair damage to galvanized finishes with zinc-rich paint recommended by the manufacturer.

3.3 ACCEPTANCE

A. All specified conduits and pull boxes indicated on the drawings and specifications shall be complete.

B. Specified shop drawings and product submittals shall have been submitted for review, and all review comments and deficiencies shall have been resolved. Final shop drawings and product submittals shall have been submitted, reviewed, and found to meet the requirements of the specifications.

C. Issues and deficiencies identified in field reports and punch lists shall have been resolved. Final as-built drawings shall have been submitted, reviewed, and found to meet the requirements of the specifications.

D. The sub-contractor shall provide written notice of the final completion of the telecom infrastructure. Upon receipt, the **McFarland** Representative will review/observe the completed installation. Once the **McFarland** Representative is satisfied that all work is in accordance with the Contract Documents, the Sub-contractor will be notified in writing.

3.4 RE-INSTALLATION

A. No additional burden to the **McFarland** regarding costs, network downtime, and end-user interruption shall result from the re-installation of specified components. Scheduling for re-installation work shall be coordinated, in writing, with the **McFarland** before beginning any re-installation work.

B. CLOSEOUT ACTIVITIES

C. Sub-contractor shall provide documentation of all telecommunications system components under this section utilized throughout the site for review and reference by the **McFarland** and A/E team.

D. Sub-contractor to submit all as-built drawings and any test documentation required before acceptance by the **McFarland**.

END OF SECTION 270533

SECTION 270536 - CABLE TRAYS FOR COMMUNICATIONS SYSTEMS

PART 1 - GENERAL

1.1 SUMMARY

A. Section Includes:
   1. Ladder cable trays
      a. Industrial Tray
      b. IDF (TR) & MDF (TEC)
   2. Wire-basket cable trays
   3. Indoor/Outdoor Tray (Non-Conductive)

1.2 RELATED DOCUMENTS

A. Section 270500 and all divisions of the specification and general provisions of the Construction Documents.

B. Architectural, mechanical, electrical, and all technology drawings.

C. Refer to Structural Seismic Requirement design documents Specifications, if available, for Non-Structural Components for all structural bracing and support of telecommunications equipment.
   1. Anywhere cabling Standards conflict with electrical or safety Codes, the Subcontractor shall defer to 2022-CEC and any applicable local codes or ordinances or default to the most stringent requirements listed by either.
   2. Knowledge and execution of applicable codes is the sole responsibility of the Subcontractor.
   3. Any code violations committed during installation shall be remedied at the Subcontractor's expense.

1.3 QUALITY ASSURANCE

A. Qualifications – Manufacturer
   1. Component manufacturers shall be ISO 9001:2000 and offer RoHS-compliant products.

B. Qualifications – Installer:
   1. The contractor shall coordinate the final TMGB connection with the project electrician.
   2. At a minimum, seventy-five percent (75%) of the onsite subcontractor-provided field technicians shall be factory-certified within 12 months by the manufacturer of the selected telecommunications system components being installed. Proof of certification shall always be available on-site for review for each field technician.

1.4 SUBMITTALS

A. Project Submittals – See Section 270500 Appendix A Project Submittals for contractor requirements for training validation, credentials, scaled shop drawings data sheet, and specialty product sample submittal(s) prior to site work.

B. Product Data: For each type of cable tray, See Section 270500 Appendix A for Project Required Submittal List
   1. Include data indicating dimensions and finishes for each type of cable tray shown.

C. Shop Drawings: For each type of cable tray - See Section 270500 Appendix A for Project Required Submittal List
   1. Show fabrication and installation details of cable trays, including plans, elevations, and components sections and attachments to other construction elements. Designate components and accessories, including clamps, brackets, hanger rods, splice-plate connectors, expansion-joint assemblies, straight lengths, and fittings—drawings to match the same scale as the approved design or construction drawing set.

D. Coordination Drawings: Floor plans and sections, drawn to scale, on which the following items are shown and coordinated with each other, using input from installers of the items involved.

E. Seismic Qualification Certificates: For cable trays, accessories, and components, from the manufacturer.

F. Closeout Submittals - As-Built Drawings
   1. Submit all as-built drawings in accordance with the general requirements of the construction documents.
   2. Submit bonding and grounding project work from scaled Shop Drawings in the Revit model in addition to the other Div. 27 & 28 project submittal requirements.
   3. Submit as-built drawings a minimum of two (2) weeks after completion of all Division- 27 work for A/E and **McFarland** reference.

1.5 WARRANTY

A. Warranty:
   1. The contractor shall provide all extended warranty plans at no cost to the **McFarland**-IT Project Manager.
   2. The contractor shall warranty all workmanship per the manufacturer's required installation and attachment requirements.

PART 2 - PRODUCTS

2.1 PERFORMANCE REQUIREMENTS

A. Seismic Performance: Cable trays and supports shall withstand the effects of earthquake motions determined according to ASCE/SEI 7.

1. The term "withstand" means "the cable trays will remain in place without separation of any parts when subjected to the seismic forces specified."
2. Component Importance Factor: 1.5.

B. Thermal Movements: Allow for thermal movements from ambient and surface temperature changes in cable tray installed outdoors.
1. Temperature Change: 120 deg F, ambient; 180 deg F, material surfaces.

2.2 GENERAL REQUIREMENTS FOR CABLE TRAYS

A. Cable Trays and Accessories: Identified as defined in 2016 CEC Article 392 and marked for intended location, application, and bonding per Article 800.100/A/1-6.
1. Source Limitations: Obtain cable trays and components from a single manufacturer.

B. Sizes and Configurations: See drawings for specific requirements for types, materials, sizes, and configurations.

C. Structural Performance: See articles for individual cable tray types for specific values for the following parameters:
1. Uniform Load Distribution: Capable of supporting a uniformly distributed load on the indicated support span when supported as a simple span and tested according to NEMA VE 1.
2. Concentrated Load: A load applied at the midpoint of the span and centerline of the tray.
3. Load and Safety Factors: Applicable to both side rails and rung capacities.

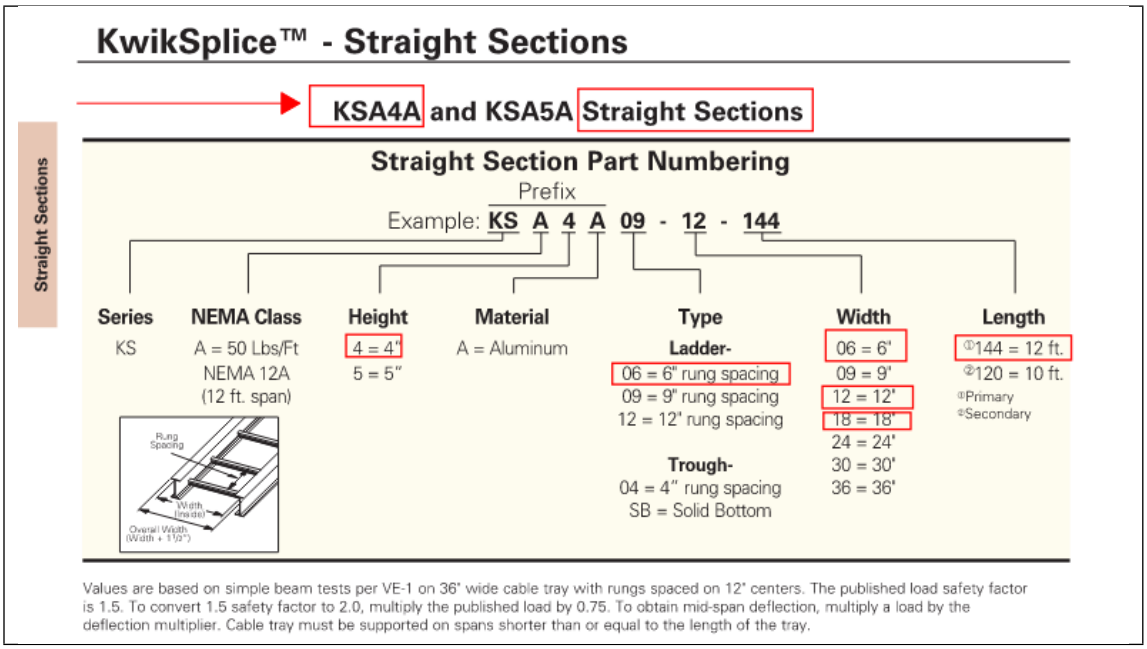

2.3 LADDER CABLE TRAYS (Ladder Racking)

A. Manufacturers: Subject to compliance with requirements, provide products by one of the following available manufacturers offering products that may be incorporated into the Work include, but are not limited to, the following:
   1. Cooper B-Line, Inc.
   2. **McFarland**-IT approved equal

B. Description:
   1. Configuration: Two 1-1/2'' x 3/8'' 16-gauge tubular steel side rails with transverse rungs welded to side rails.
   2. Rung Spacing: 9 inches O.C.
   3. Radius-Fitting Rung Spacing: 9 inches at center of tray's width.
   4. Minimum Cable-Bearing Surface for Rungs: 1-inch width with radius edges.
   5. No portion of the rungs shall protrude below the bottom plane of the side rails.
   6. Structural Performance of Each Rung: Capable of supporting a maximum cable load, with a safety factor of 1.5, plus a 200-lb concentrated load, when tested according to NEMA VE 1, Section 5.4.
   7. Straight Section Lengths: 9 feet 11.5 inches, except where shorter lengths are required to facilitate tray assembly.
   8. Width: 12 inches unless otherwise indicated on Drawings.
   9. Fitting Minimum Radius: 12 inches.
   10. Splicing Assemblies: Bolted type using serrated flange locknuts.
   11. Splice Plate Capacity: Splices located within the support span shall not diminish the rated loading capacity of the cable tray.

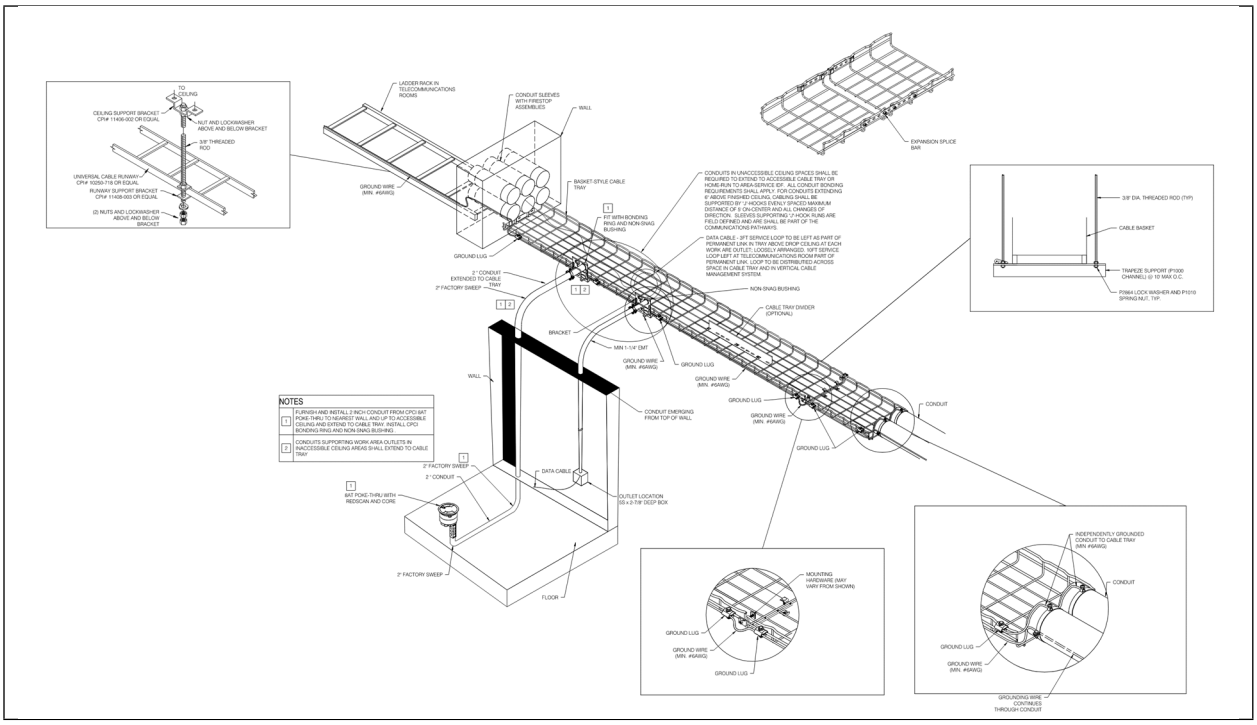

2.4 WIRE-BASKET CABLE TRAYS

A. Manufacturers: Subject to compliance with requirements, provide products by one of the following available manufacturers offering products that may be incorporated into the Work include, but are not limited to, the following:
   1. Chatsworth Products Inc.
   2. **McFarland**-IT approved equal

B. Description:
   1. Configuration: Wires are formed into a standard 2-by-4-inch wire mesh pattern with intersecting wires welded together. Mesh sections must have at least one bottom longitudinal wire along the entire length of the section.
   2. Materials: High-strength-steel longitudinal wires with no bends.
   3. Safety Provisions: Wire ends along wire-basket sides (flanges) are rounded during manufacturing to maintain the integrity of cables and installer safety.
   4. Sizes:
      a. Straight sections shall be furnished in standard 10 feet lengths.
      b. Wire-Basket Depth: 2-inch usable loading depth by 4 inches to 24 inches wide.
      c. Wire-Basket Depth: 4-inch usable loading depth by 4 inches to 24 inches wide.
      d. Wire-Basket Depth: 6-inch usable loading depth by 8 inches to 24 inches wide.
   5. Connector Assemblies: Bolt welded to plate shaped to fit around adjoining tray wires and mating plate. Mechanically joins adjacent tray wires to splice sections together or to create horizontal fittings.
   6. Connector Assembly Capacity: Splices located within the support span shall not diminish the rated loading capacity of the cable tray.
   7. Hardware and Fasteners: Steel, zinc plated according to ASTM B 633.

2.5 MATERIALS AND FINISHES

A. Steel:
   1. Straight Section and Fitting Side Rails and Rungs: Steel complies with the minimum mechanical properties of ASTM A 1008/A 1008M, Grade 33, Type 2.
   2. Fasteners: Steel complies with the minimum mechanical properties of ASTM A 510/A 510M, Grade 1008.
   3. Finish: Mill galvanized before fabrication.
      a. Standard: Comply with ASTM A 653SS/A 653M, G90.
      b. Hardware: Chromium-zinc plated, ASTM F 1136.
   4. Finish: Electro-galvanized before fabrication.
      a. Standard: Comply with ASTM B 633SS.
      b. Hardware: Galvanized, ASTM B 633SS.
   5. Finish Hot-dip galvanized after fabrication.
      a. Standard: Comply with ASTM A 123/A 123M, Class B2/ASTM A1008, Grade 33, Type 2.
      b. Hardware: Chromium-zinc plated, ASTM F 1136.
   6. Finish Powder-coat enamel paint.
      a. Powder-Coat Enamel: Cable tray manufacturer's recommended primer and corrosion-inhibiting treatment with factory-applied powder-coat paint.
      b. Epoxy-Resin Prime Coat: Cold-curing epoxy primer, MPI# 101.
      c. Epoxy-Resin Topcoat: Epoxy, cold-cured, gloss, MPI# 77.

d. Hardware: Chromium-zinc plated, ASTM F 1136.

7. Finish Factory-standard primer, ready for field painting, with chromium-zinc-plated hardware according to ASTM F 1136.
8. Finish Black oxide finish for support accessories and miscellaneous hardware according to ASTM D 769.

B. Aluminum:
1. Materials: Alloy 6063-T6 according to ANSI H 35.1/H 35.1M for extruded components and Alloy 6061-T6 according to ANSI H 35.1/H 35.1M for fabricated parts.
2. Hardware: Chromium-zinc-plated steel, ASTM F 1136.

2.6 CABLE TRAY ACCESSORIES

A. Fittings: Tees, crosses, risers, elbows, and other fittings, as indicated, of the same materials and finishes as cable trays.

B. Barrier Strips: Same materials and finishes as for cable tray.

C. Cable tray supports and connectors, including bonding jumpers, as the cable tray manufacturer recommends.

D. WARNING SIGNS - Lettering: 1-1/2-inch high, black letters on yellow background with legend "Warning! Not to Be Used as Walkway, Ladder, or Support for Ladders or Personnel."
1. Comply with requirements for fasteners in Section 260553, "Identification for Electrical Systems."

E. SOURCE QUALITY CONTROL - Testing: Test and inspect cable trays according to NEMA VE 1.

2.7 INDOOR/OUTDOOR CABLE TRAYS PVC CABLE TRAY (Non-Conductive)

A. Manufacturers: Subject to compliance with requirements, provide products by one of the following available manufacturers offering products that may be incorporated into the Work include, but are not limited to, the following:
1. Basorplast
2. **McFarland**-IT approved equal

B. Description:

	ADVANTAGES	DISADVANTAGES
FiberGlass Cable Tray, Cable Ladder	Best price	Lowest admissible working load
	Equal or better chemical behavior	
	Self extinguising	Greater limitation of working temperatures
	Recyclable	
	Weithg Product for comfort installation.	
Stainless Steel Cable Tray, Cable Ladder	Major Electrical Safety of the installation, does not have electrical continuity	Lowest admissible working load
	Cost efficient	Greater limitation of working temperatures
	Facing SS304 better performance in saline environment	
Aluminium Cable Tray and Cable Ladder	Major Electrical Safety of the installation, does not have electrical continuity	Lowest admissible working load
	Cost efficient	
	Best corrosion behavior for aluminum (NO Anodized, 100% welding cable ladders)	Greater limitation of working tem-peratures

MODELS	B inch	B mm	H inch	H mm	Weight LBS/	PVCM1 UV REF. PVC
BPE-P 2.3/8" x 4"	4"	100	2 3/8"	60	4.83	2/10070
BPE-P 2.3/8" x 6"	6"	150	2 3/8"	60	6.02	2/10071
BPE-P 2.3/8" x 8"	8"	200	2 3/8"	60	9.59	2/10072
BPE-P 2.3/8" x 12"	12"	300	2 3/8"	60	15.48	2/10073

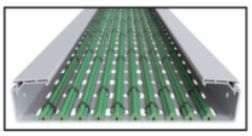

2 JUBPE 60 (2/10084)

USEFUL AREA (inch²)

B		H60 (2 3/8")	
in	mm	in2	cm2
4"	100	8.06	52
6"	150	12.4	80
8"	200	15.7	101
12"	300	23.6	152

NEMA Cable Tray Classification (U.S) - UL 568 SWL lb/ft

VALUES		Temp. Max 104°F		Temp. Max 140°F	
		6ft span	8ft span	6ft span	8ft span
MODELS	Nema	lb/ft	lb/ft	lb/ft	lb/ft
BPE-P 2.3/8" x 4"	-	3,7	2,1	2,4	1,3
BPE-P 2.3/8" x 6"	-	5,1	2,8	3,2	1,8
BPE-P 2.3/8" x 8"	-	23,1	13,0	15,0	8,4
BPE-P 2.3/8" x 12"	5AA	25,4	14,2	16,5	9,3

NOTE: Tests acc. UL 568 Method A (Load Before Destruction), 1,5 Safety factor

*Note – The entire installation including cable tray straight sections, covers, supports, splices, nuts and bolts are all made of from high quality PVC. UV and rust resistant is required.

PART 3 - EXECUTION

3.1 CABLE TRAY INSTALLATION

A. Install cable trays according to NEMA VE 2.

B. Install cable trays as a complete system, including fasteners, hold-down clips, support systems, barrier strips, adjustable horizontal and vertical splice plates, elbows, reducers, tees, crosses, cable dropouts, adapters, covers, and bonding.

C. Install cable trays so that the tray is accessible for cable installation and all splices are accessible for inspection and adjustment.

D. Remove burrs and sharp edges from cable trays.

E. Join aluminum cable tray with splice plates; use four square neck-carriage bolts and locknuts.

F. Fasten cable tray supports the building structure and installs seismic restraints.

G. Design fasteners and supports to carry the cable tray, the cables, and a concentrated load of 200 lb. Comply with requirements in Section 260529, "Hangers and Supports for Electrical Systems. “Comply with seismic-restraint details in Section 260548, "Vibration and Seismic Controls for Electrical Systems."

H. Place supports so that spans do not exceed maximum spans on schedules and provide clearances shown on Drawings. Install intermediate supports when cable weight exceeds the load-carrying capacity of the tray rungs.

I. Construct supports from channel members, threaded rods, and other appurtenances furnished by cable tray manufacturers. Arrange supports in trapeze or wall-bracket form as required by the application.

J. Support bus assembly to prevent twisting from eccentric loading.

K. Install center-hung supports for single-rail trays designed for 60 versus 40 percent eccentric loading condition, with a safety factor of 3.

L. Locate and install supports according to NEMA VE 2. Do not install more than one cable tray splice between supports.

M. Support wire-basket cable trays with center support hangers, trapeze hangers, or wall brackets as noted on construction drawings.

N. Support center support hangers and trapeze hangers for wire-basket trays with 3/8-inch- diameter rods.

O. Connect equipment with flanged fittings fastened to cable trays and equipment. Support cable trays independent of fittings. Do not carry the weight of cable trays on the equipment enclosure.

P. Install expansion connectors where cable trays cross building expansion joints and in cable tray runs that exceed dimensions recommended in NEMA VE 2. Space connectors and set gaps according to applicable standards.

Q. Make changes in direction and elevation using the manufacturer's recommended fittings.

R. Make cable tray connections using the manufacturer's recommended fittings.

S. Seal penetrations through fire and smoke barriers. Comply with requirements in Section 078413, "Penetration Firestopping."

T. Install capped metal sleeves for future cables through firestop-sealed cable tray penetrations of fire and smoke barriers.

U. Install cable trays with enough workspace to permit access for installing cables.

V. Install barriers to separate cables of different systems, such as power, communications, and data processing, or of different insulation levels, such as 600, 5000, and 15 000 V.

W. Install permanent covers, if used, after installing the cable. Install cover clamps according to NEMA VE 2.

X. Clamp covers on cable trays installed outdoors with heavy-duty clamps.

Y. Install warning signs in visible locations on or near cable trays after cable tray installation.

3.2 CABLE TRAY GROUNDING

A. Ground cable trays according to NFPA 70 unless additional grounding is specified. Comply with ANSI/NECA/BICSI-607 requirements, ITSM-2017, and Section 260526, "Grounding and Bonding for Electrical Systems."

B. Cable trays with communications cable shall be bonded together with splice plates listed for grounding purposes or with listed bonding jumpers.

C. Cable trays with control conductors shall be bonded together with splice plates listed for grounding purposes or with listed bonding jumpers.

D. When using epoxy- or powder-coat painted cable trays as a grounding conductor, completely remove coating at all splice contact points or ground connector attachment. After completing the splice-to-grounding bolt attachment, repair the coated surfaces with the coating materials recommended by the cable tray manufacturer.

E. Bond cable trays to a power source for cables contained within with bonding conductors sized according to ANSI/NECA/BICSI-607, ITSM-2017, and Section 260526 "Grounding and Bonding for Electrical Systems."

3.3 CABLE INSTALLATION

A. Install cables only when each cable tray run has been completed and inspected.

B. Fasten cables on horizontal runs with cable clamps or cable ties, according to NEMA VE 2. Tighten the clamps only enough to secure the cable without indenting the cable jacket. Install cable ties with a tool that includes an automatic pressure-limiting device.

C. Fasten cables on a vertical run to cable trays every 18 inches.

D. Fasten and support cables that pass from one cable tray to another or drop from cable trays to equipment enclosures. Fasten cables to the cable tray at the point of exit and support cables independent of the enclosure. The cable length between cable trays or between a cable tray and enclosure shall be no more than 72 inches.

E. Tie MI cables down every 36 inches where required to provide a 2-hour fire rating and every 72 inches elsewhere.

F. In existing construction, remove inactive or dead cables from cable trays.

3.4 CONNECTIONS

A. Remove paint from all connection points before making connections. Repair paint after the connections are completed.

B. Connect pathways to cable trays according to NEMA VE 2 and NEMA FG 1 requirements.

3.5 FIELD QUALITY CONTROL

A. Perform the following tests and inspections with the assistance of a factory-authorized service representative:
   1. After installing cable trays and after electrical circuitry has been energized, survey for compliance with requirements.
   2. Visually inspect cable insulation for damage. Correct sharp corners, protuberances in cable trays, vibrations, and thermal expansion and contraction conditions, which may cause or have caused damage.
   3. Verify that the number, size, and voltage of cables in cable trays do not exceed that permitted by NFPA 70. Verify that communications or data-processing circuits are separated from power circuits by barriers or are installed in separate cable trays.
   4. Verify that there are no intruding items in the cable tray, such as pipes, hangers, or other equipment.
   5. Remove dust deposits, industrial process materials, trash of any description, and any blockage of tray ventilation.
   6. Visually inspect each cable tray joint and each ground connection for mechanical continuity. Check bolted connections between sections for corrosion. Clean and retorque in suspect areas.
   7. Check for improperly sized or installed bonding jumpers.
   8. Check for missing, incorrect, or damaged bolts, bolt heads, or nuts. When found, replace with specified hardware.
   9. Perform visual and mechanical checks for adequacy of cable tray grounding; verify that all takeoff raceways are bonded to cable trays. Test the entire cable tray system for continuity. The maximum allowable resistance is 1 ohm.

B. Prepare test and inspection reports.

3.6 PROTECTION

A. Protect installed cable trays and cables.
   1. Install temporary protection for cables in open trays to safeguard exposed cables against falling objects or debris during construction. Temporary protection for cables and cable trays can be constructed of wood or metal materials and shall remain in place until the risk of damage is over.
   2. Repair damage to galvanized finishes with zinc-rich paint recommended by the cable tray manufacturer.

3. Repair damage to paint finishes with matching touchup coating recommended by the cable tray manufacturer.

END OF SECTION 270536

SECTION 271116 - CABINETS, RACKS, AND ENCLOSURES FOR COMMUNICATIONS SYSTEMS

PART 1 - GENERAL

1.1 SUMMARY

A. Section Includes:
   1. Provides specifications for network cabinets, racks, and telecommunications enclosure components to house various telecommunications infrastructure components and systems equipment.
   2. Equipment Racks
   3. Equipment Cabinets
      a. (ea.) Cabinet Over 10kW requires containment

1.2 RELATED DOCUMENTS

A. Section 270500 and all divisions of the specification and general provisions of the Construction Documents.

B. Architectural, mechanical, electrical, and all technology drawings.

C. Refer to Structural Seismic Requirement design documents Specifications, if available, for Non-Structural Components for all structural bracing and support of telecommunications equipment.

1.3 QUALITY ASSURANCE

A. Qualifications – Manufacturer
   1. Component manufacturers shall be ISO 9001:2000 and offer RoHS-compliant products.

B. Qualifications – Installer:
   1. The contractor shall coordinate the final TMGB connection with the project electrician.
   2. At a minimum, seventy-five percent (75%) of the onsite subcontractor-provided field technicians shall be factory-certified within 12 months by the manufacturer of the selected telecommunications system components being installed. Proof of certification shall always be available on-site for review for each field technician.

1.4 SUBMITTALS

A. Project Submittals – See Section 270500 Appendix A Project Submittals for contractor requirements for training validation, credentials, scaled shop drawings data sheet, and specialty product sample submittal(s) prior to site work.

B. Closeout Submittals - As-Built Drawings
   1. Submit all as-built drawings in accordance with the general requirements of the construction documents.

2. Submit bonding and grounding project work from scaled Shop Drawings in the Revit model in addition to the other Div. 27 & 28 project submittal requirements.
3. Submit as-built drawings a minimum of two (2) weeks after completion of all Division- 27 work for A/E and **McFarland** reference.

1.5 WARRANTY

A. Warranty:
1. The contractor shall provide all extended warranty plans at no cost to the **McFarland**-IT Project Manager.
2. The contractor shall warranty all workmanship per the manufacturer's required installation and attachment requirements.

PART 2 - PRODUCTS

2.1 CABINETS, RACKS, ENCLOSURES

A. Basis-of-Design Product: Subject to compliance with requirements:

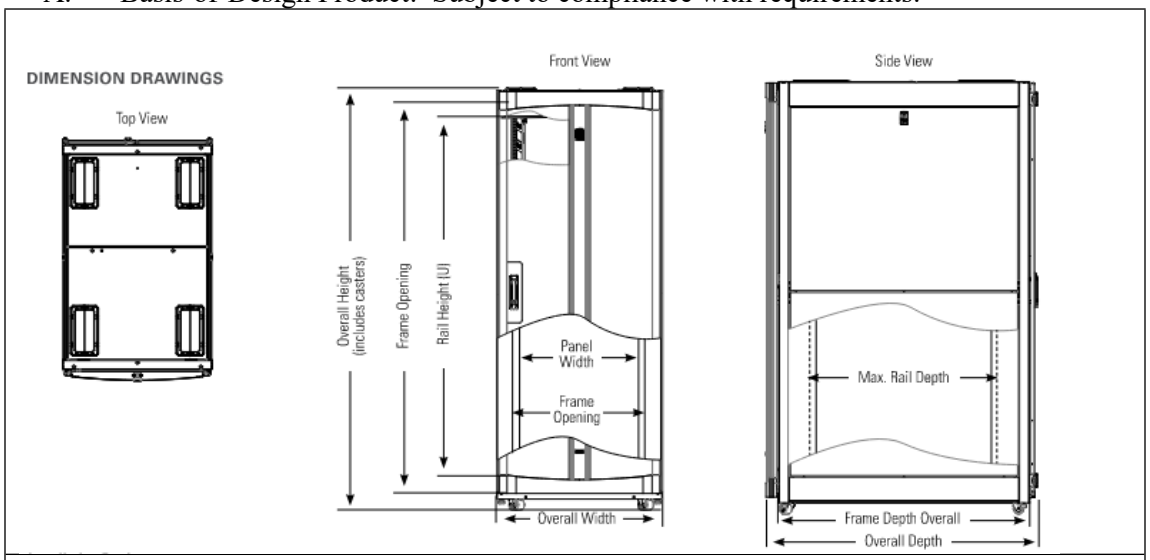

F-Series Part # FF1N-113B-C42-A

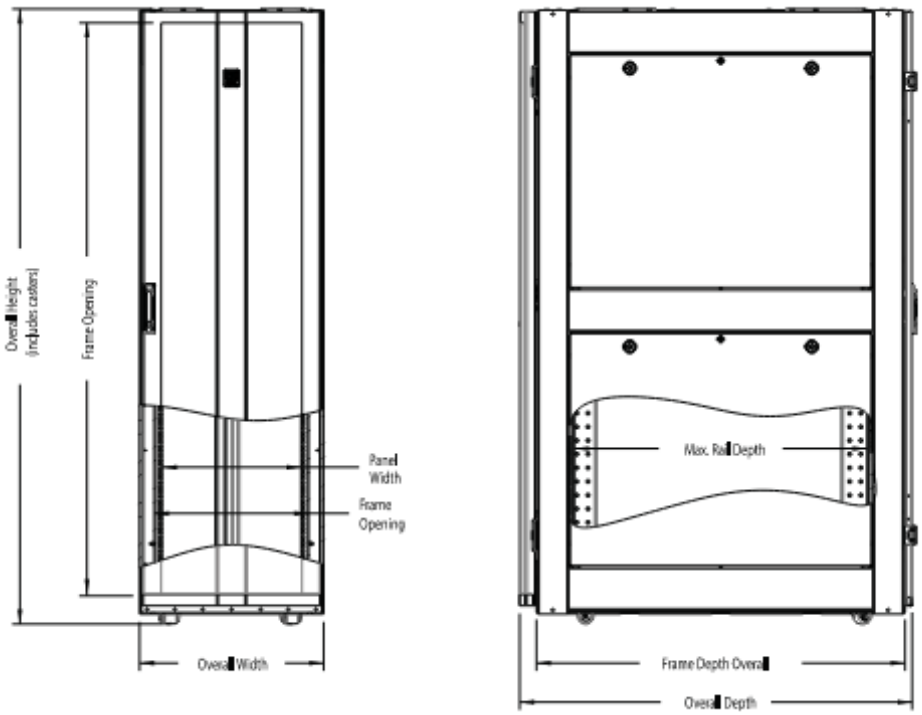

Z4-Series Part # Z4-11N-113E-C12

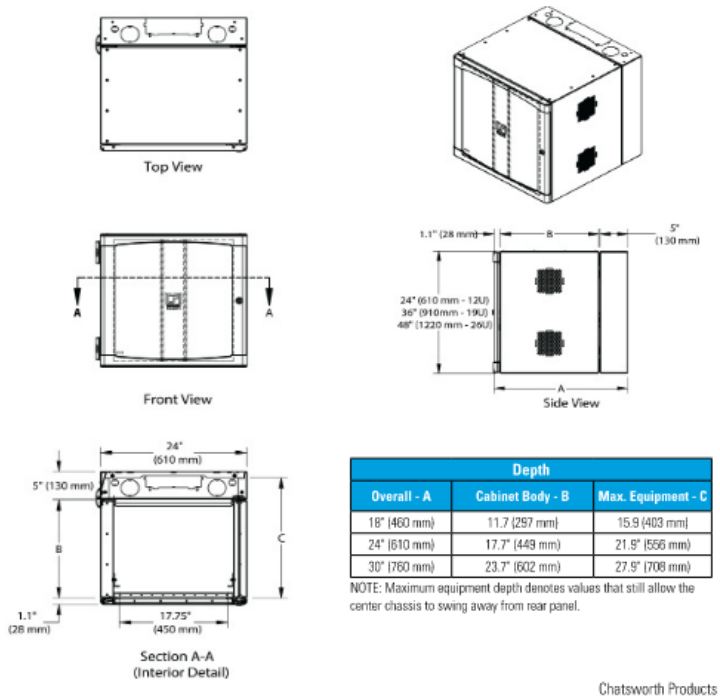

Depth		
Overall - A	Cabinet Body - B	Max. Equipment - C
18" (460 mm)	11.7 (297 mm)	15.9 (403 mm)
24" (610 mm)	17.7" (449 mm)	21.9" (556 mm)
30" (760 mm)	23.7" (602 mm)	27.9" (708 mm)

NOTE: Maximum equipment depth denotes values that still allow the center chassis to swing away from rear panel.

a. CUBE-iT 48” x 30” x 24” – 11996-748

2. Chatsworth Products Incorporated

a. F-Series Part # FF1N-113B-C42-A
b. Z4-Series Part # Z4-11N-113E-C12
c. CUBE-iT 48” x 30” x 24” – 11996-748

3. Middle Atlantic – Specialty Situation requiring Approval by Greg Smith

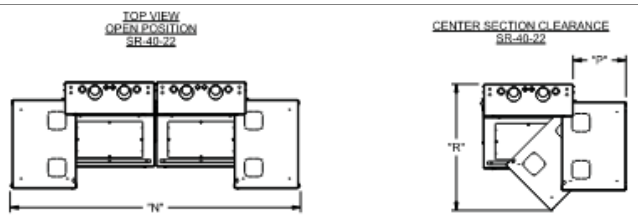	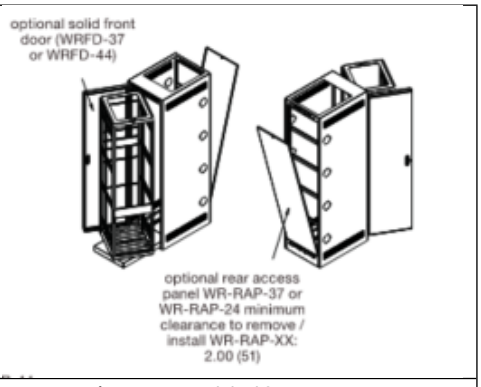
SR Series #SR-40-32 (1) & (2) Cabinet Configuration	WR Series #WR-44-42

a. Wall Mounted Floor Supported, SR Series #SR-40-32
b. Floor Mount Rollout Rack, WR Series #WR-44-42

B. Product Options:
1. The indicated manufacturers shall be the basis of the design, and each component selected shall address the particular infrastructure requirements.

C. Description:
1. New cabinet and cabinet components shall be black in color. The finish shall be a powder coat.
2. Network equipment will be mounted to a network equipment suited cabinet 45u or 40u rack units tall, 24 Wide, and 42” and/or 32” deep.
3. Per structural engineer or manufacturer requirements, Floor-mounted racks shall be permanently attached to the floor using the lag bolt and lag shields for masonry-type floors or appropriate fastening hardware for other types of flooring as approved by the **McFarland**. Racks installed adjacent to each other will be fastened using proper bolt, nut, and washer combinations.
4. The rated load for equipment cabinets shall be no less than 2500 pounds.
5. The ladder rack shall be fastened using the proper hanging and connecting hardware and secured consistently with recommended weight load spacing recommendations.
6. Patch panels, wire cable management hardware, and other related passive equipment will be attached to racks and mounting rails with at least two screws per mounting bracket and located by the Rack/Cabinet Equipment Elevation Form contained in project documentation on a per job basis.
7. All equipment shall be free from imperfections and defects.
8. All cabinets and racks shall be grounded and bonded to the specification of BICSI, Telecommunications Methods Manual, and ANSI/NECA/BICSI 607 (2011) Bonding and Grounding Standard or BICSI-ITSM (2015). See the grounding section in this document for details.
9. Active equipment shall be positioned in racks and cabinets to work according to that room's “hot aisle/cold aisle” configuration.

10. Equipment with intake/exhaust patterns other than front-to-back should be remediated with appropriate passive ducts to correct airflow to front-to-back patterns wherever possible.
11. Any rack/cabinet spaces not used should be filled with blank panels to minimize rogue backflow of air within the facility.
12. All racks and cabinets shall have a minimum of 3 feet clearance in the front, with 4 feet being preferable for the movement and installation of equipment. Some equipment may require more clearance. See project documentation or equipment manufacturer's guidelines for details.
13. All racks and cabinets shall have a minimum of 2 feet clearance in the rear, with 3 feet being preferable for the movement and installation of equipment.
14. Each cabinet enclosure shall have a rectangular frame with a removable top panel, side panels, and doors. Installed cabinets shall include thermal, power, and cable management accessories that control airflow through the cabinet and keep the network and power cables separate and organized.
15. Provide various configurable size blanking panels for each equipment cabinet.
16. The cabinet frame shall be rectangular with four corner posts manufactured from steel with welded and bolted frame construction. The horizontal frame members shall be steel extrusion with grooves that accept captive hardware to allow attachment of equipment mounting rails and thermal, cable, and power management accessories. The captive hardware will slide within the groove allowing rails and accessories to be adjusted in depth without removal from the cabinet. The slide extrusions will be marked with a scale that allows easy top-to-bottom alignment of mounting rails and other accessories when adjusted in depth.
17. Each cabinet shall include two pairs of equipment mounting rails. Mounting rails shall bolt to the side of the cabinet frame at the top and bottom of the frame and shall be adjustable in depth to provide front and rear support for equipment.
18. Equipment Mounting Rails shall be spaced horizontally to support 19" wide EIA-310- D compliant rack-mount equipment. Each RMU will be marked and numbered on the front mounting rails.
19. Attachment points will be M5/M6 cage nuts or 10-32/10-24 threaded rails. Mounting rails shall be square-punched according to the ANSI/EIA-310-D Universal hole pattern. The cabinet will include assembly and equipment-mounting hardware. Each cabinet will include (50) combination pan heads and pilot point mounting screws.
20. The cabinet shall include a solid top panel with four cable access ports near the frame's front and rear corners. Each cable access port shall be plastic with a brush seal to allow easy addition and removal of cables while limiting bypass airflow.
21. The cabinet shall include two locking solid side panels with spring-loaded latches for easy installation and removal. The cabinet shall be designed to allow baying with or without side panels installed.
22. The sides of the equipment-mounting channels will be punched to allow attachment of equipment support rails, vertical power strips, and cable managers along the sides of the rack or for rack-to-rack baying.
23. The cabinet shall include a single front door with a high airflow perforated metal panel, hidden tamper-resistant hinges with quick-release hinge pins, and a swing handle. The door shall be removable and reversible from the right or left. The door shall open to 150° when the cabinet is bayed with other cabinets. The front door shall have a single-point slam latch with a keyed lock.
24. The cabinet shall include a high-flow perforated metal double rear door with a swing handle. The doors shall be removable. The doors shall open to 175° when the cabinet is

bayed with other cabinets. The double rear door shall have a two-point cam latch with a keyed lock.

25. The mounting rails, top panel, side panels, and doors shall be electrically bonded to the cabinet frame. The cabinet frame shall have a prepared location for attaching a grounding lug.
26. The cabinet shall be UL Listed. UL Listing will be stated in the manufacturer's product literature.
27. The cabinet shall include (4) leveling feet, (4) clamps for securing the leveling feet to the floor, and a grounding lug for bonding the cabinet frame to the Telecommunications Grounding Busbar. The cabinet manufacturer shall sell compatible casters and equipment mounting hardware as accessories.

D. Accessory Products:
1. Cabinet-mounted vertical power distribution units. Refer to the Division 27 11 26 specifications.

2.2 POWER REQUIREMENTS

A. The contractor shall be responsible for confirming that cabinets containing active equipment have installed (2) PDUs (power strips) to provide sufficient receptacles and current capacity to support the equipment.

B. Minimum power configuration should be no less than 20 A, 120 Vac power, with 208 Vac where needed. All circuits shall be on the same phase of power and coordinate phase requirements when circuits are fed from UPS or transformer. Consult project documentation for details on the power needs of specific racks and cabinets.

2.3 120Vac Power circuits should have dedicated neutral and ground conductors and no exposed on/off switch or breaker controls that might cause accidental shut-off.

2.4 EQUIPMENT RACKS

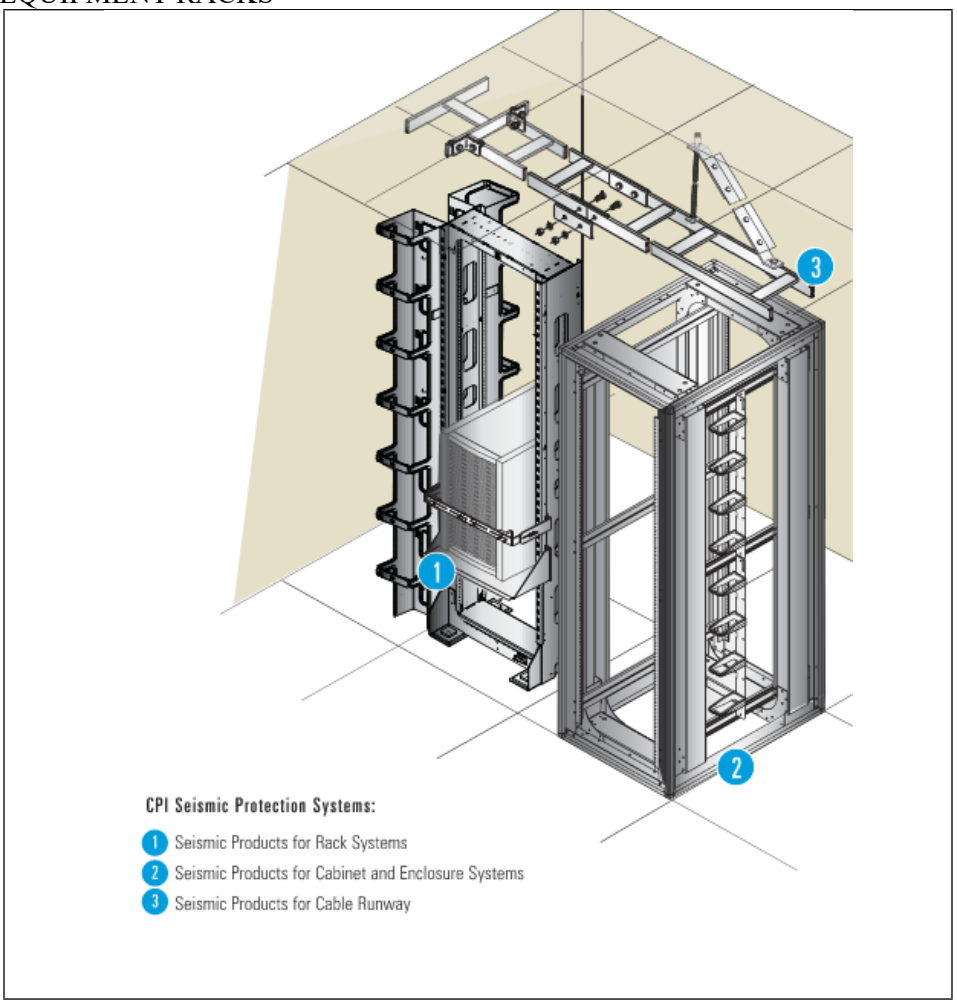

A. Basis-of-Design Product: Subject to compliance with requirements:
   1. Eaton
      a. Tripp Lite Series SmartRack 42U Standard-depth rack enclosure cabinet with doors and side panels.
      b. MFG# : TC-KP48

B. Product Options:
   1. The indicated manufacturers shall be the basis of the design, and each component selected shall address the particular infrastructure requirements.

C. Description:
   1. Equipment racks and rack components shall be black in color. The finish shall be a powder coat.

2. Universal Free Standing 2-Post Relay Racks shall be aluminum, able to support and organize electronic equipment, cross-connection, and/or termination hardware for fiber optic cabling, station cabling, riser cabling, or building entrance cabling as may be required by design.
3. Free Standing 4-Post Relay Racks shall be steel, aluminum, or a combination of both steel and aluminum, able to support and organize electronic equipment, cross-connection and/or termination hardware for fiber optic cabling, station cabling, riser cabling, or building entrance cabling as may be required by design.
4. The assembled rack will measure 84" H x 20.3" W x 29 or 36" D. The sides of the equipment- mounting channels will be punched to allow attachment of vertical cable managers along the sides of the rack or for rack-to-rack baying.
5. Racks shall be manufactured from aluminum and/or steel extrusions.
6. Each rack will have two L-shaped top angles, two L-shaped base angles, and two C-shaped equipment-mounting channels. The rack will assemble with bolt hardware. Equipment-mounting channels will be threaded for easy assembly. The base angles will be pre-punched for attachment to the floor.
7. Equipment mounting channels will be 3" deep and punched on the front and rear flange with the ANSI/EIA-310-D Universal hole pattern to provide 45 rack-mount spaces for equipment. Each mounting space will be marked and numbered on the mounting channel.
8. The rack will be UL Listed.
9. Network equipment will mount onto a network equipment-suited cabinet 45u rack units tall.
10. Floor-mounted racks shall be permanently attached to the floor using lag bolts and lag shields for masonry-type floors or appropriate fastening hardware for other types of flooring as approved by the **McFarland**-IT. Racks installed adjacent to each other will be fastened using proper bolt, nut, and washer combinations.
11. Rated load for equipment cabinets shall be no less than 1000 pounds, with equipment evenly distributed along the height of the rack.
12. Ladder rack shall be fastened using the proper hanging and connecting hardware and secured in a manner consistent with recommended weight load spacing recommendations.
13. Patch panels, wire cable management hardware, and other related passive equipment will be attached to racks and mounting rails with at least two screws per mounting bracket and located in accordance with the Rack Equipment Elevation Form contained in project documentation on a per-job basis.
14. All equipment shall be free from imperfections and defects.
15. All racks shall be grounded and bonded to the specification of BICSI, Telecommunications Methods Manual, and ANSI/TIA 607-B Bonding and Grounding Standard. See the grounding section in this document for details.
16. Active equipment shall be positioned in racks to work according to that room's "hot aisle/cold aisle" configuration.
17. Equipment with intake/exhaust patterns other than front-to-back should be remediated with appropriate passive ducts to correct airflow to front-to-back patterns wherever possible.
18. Any rack/cabinet spaces not used should be filled with blank panels to minimize rogue backflow of air within the facility.
19. All racks and cabinets shall have a minimum of 3 feet clearance in the front, with 4 feet being preferable for the movement and installation of equipment. Some equipment may require more clearance. See project documentation or equipment manufacturer's guidelines for details.
20. All racks shall have a minimum of 3 feet of clearance in the rear for the movement and installation of equipment.

21. Equipment Mounting Rails shall be spaced horizontally to support 19” wide EIA-310- D compliant rack-mount equipment. Each RMU will be marked and numbered on the front mounting rails.
22. Attachment points will be threaded with 12-24 roll-formed threads. The rack will include assembly and equipment-mounting hardware. Each rack will include (50) each combination pan head, pilot point mounting screws
23. The cabinet shall be UL Listed. UL Listing will be stated in the manufacturer’s product literature.

D. Accessory Products:
1. Cabinet-mounted vertical power distribution units. Refer to the Division 27 11 26 specifications.

2.5 POWER REQUIREMENTS

A. Communication Contractor shall be responsible for confirming that equipment racks containing active equipment have installed (2) PDUs (power strips) to provide sufficient receptacles and current capacity to support the equipment. See Responsibility Matrix for additional information.

B. Minimum power configuration should be no less than 20 A, 120 Vac power, with 208 Vac where needed. All circuits shall be on the same phase of power. Consult project documentation for details on the power needs of specific racks and cabinets.

C. Power circuits should have dedicated neutral and ground conductors and no exposed on/off switch or breaker controls that might cause accidental shut-off.

PART 3 - EXECUTION

3.1 EXAMINATION

A. Check actual site conditions before the start of any work. Ensure all preceding trade work associated with the telecommunications system is accurate and complete before proceeding with installing or using products specified in this section.

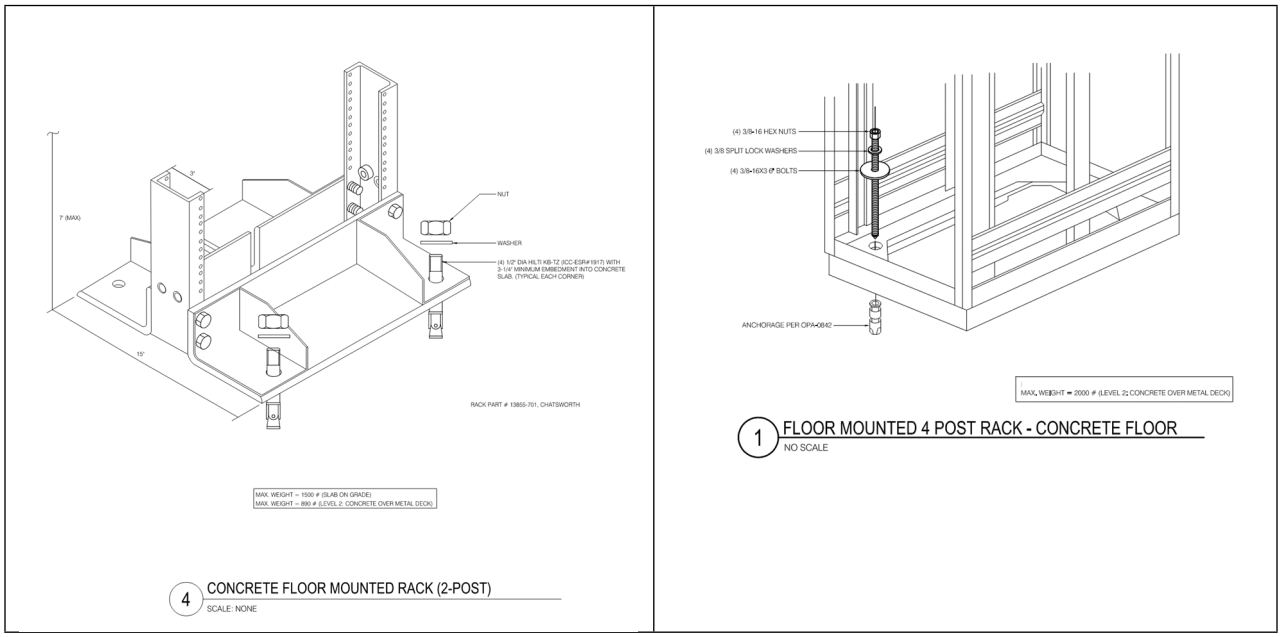

- Installation of racks and cabinets shall be coordinated with SEOR details

3.2 INSTALLATION

A. Process:

1. Check actual site conditions before the start of any work. Ensure all preceding trade work associated with the telecommunications system is accurate and complete before proceeding with installing or using products specified in this section. Examples of work that must be checked include, but are not limited to:
   a. Electrical requirements (conduit installation and capacity).
   b. The telecommunications rooms are the size indicated in the project drawings.
   c. Adequate clearances of doors, riser spaces, and ceilings for all components of the telecommunications system.
   d. Examine and compare the telecommunications drawings and specifications with the drawings and specifications of other trades. Report any discrepancies between them to the A/E and obtain written instructions for changes or revisions.
2. Assemble racks and cabinets according to the manufacturer's instructions. Verify that mounting rails are correctly positioned for rack-mount equipment before attaching the rack to the floor.
3. Anchor all racks and cabinets to the concrete floor per the structural requirements and cross brace to the cable runway system above.
4. Racks shall be grounded to the TGB using appropriate hardware provided by the contractor. The ground will meet local code requirements and will be approved by the Authority Having Jurisdiction (AHJ).
5. Ladder rack may be attached to the top of the rack to deliver cables to the rack. The rack should not be drilled to attach the ladder rack. Use appropriate hardware from the ladder rack manufacturer.

3.3 RE-INSTALLATION

A. No additional burden to the **McFarland** regarding costs, network downtime, and end-user interruption shall result from the re-installation of specified components. Scheduling for re-installation work shall be coordinated, in writing, with the **McFarland** before beginning any re-installation work.

3.4 CLOSEOUT ACTIVITIES

A. Contractor shall provide documentation of all telecommunications system components under this section utilized throughout the site for review and reference by the **McFarland** and A/E team.

B. Contractor to submit all as-built drawings and any test documentation required before acceptance by the **McFarland**.

END OF SECTION 271116

SECTION 271119 - TERMINATION BLOCKS AND PATCH PANELS FOR COMMUNICATIONS SYSTEMS

PART 1 - GENERAL

1.1 SUMMARY

A. Section Includes:
   1. Provides specifications for wall and rack/cabinet-mounted blocks, termination panels and patch panel components utilized to terminate various telecommunications infrastructure cabling and connectivity.
   2. Optical Fiber Termination panels.
   3. Copper horizontal cabling Patch Panels.

1.2 RELATED DOCUMENTS

A. Section 270500 and all divisions of the specification and general provisions of the Construction Documents.

B. Architectural, mechanical, electrical, and all technology drawings.

C. Refer to Structural Seismic Requirement design documents Specifications, if available, for Non-Structural Components for all structural bracing and support of telecommunications equipment.

1.3 ACTION SUBMITTALS

A. Product Data: For each product indicated.
   1. Submit all product data in accordance with general requirements of the construction documents.
   2. Submit product cut sheets and a detailed list of components a minimum of two (2) weeks prior to commencement of Division-27 work for A/E review and action.
   3. Alternate and “Or Equal” designated products must be submitted for review and judgment to the A/E prior to installation. The contractor-proposed alternate products or components must be verified by two (2) independent sources within the past 6 months. This request shall include the two (2) independent sources, the original Product’s specification sheet, the proposed substitute product cut sheet, and a written request to review the substitute product.
   4. Any request of an alternate or substitution must be submitted to the A/E for action no later than fourteen (14) calendar days after release of the original telecommunications bid documents.

1.4 INFORMATIONAL SUBMITTALS

A. Coordination Drawings:

1. Submit all shop drawings in accordance with the general requirements of the construction documents.
2. Submit shop drawings a minimum of two (2) weeks prior to commencement of Division-27 work for A/E review and action.
3. Shop drawings shall include evidence of grounding and bonding components are coordinated with field conditions and the work of other trades.
4. This submittal may have a written component and a visual, drawn component for review and action by the A/E prior to installation.

B. Certificates:
1. Submit management and installation team reference documentation verifying:
   a. The project manager is a RCDD in good standing with BICSI and is qualified to manage the scope of work described in the contract documents and has five (5) years of experience managing similar projects in size and scope. The documentation shall include the RCDD registration number.
   b. The field supervisor is a BICSI trained technician that is qualified to perform and oversee the work described in the contract documents

C. Qualification Statements:
1. The contractor shall submit documentation that within the past 12 months, a minimum of 75% of all installation personnel have been trained or certified by the manufacturer of the products they are installing.

1.5 CLOSEOUT SUBMITTALS

A. As-Built Drawings:
1. Submit all as-built drawings in accordance with the general requirements of the construction documents.
2. Submit as-built drawings a minimum of two (2) weeks after completion of all Division- 27 work for A/E and Owner reference:

1.6 QUALITY ASSURANCE

A. Qualifications – Manufacturer
1. Component manufactures shall be ISO 9001:2000 and offer products that are RoHS compliant.

B. Qualifications – Installer:
1. At a minimum, seventy-five percent (75%) of the onsite contractor provided field technicians shall be factory certified within 12 months by the manufacturer of the selected telecommunications system components being installed. Proof of certification shall be available on site for review at all times for each field technician.

PART 2 - PRODUCTS

2.1 OPTICAL FIBER TERMINATION PANELS

A. Basis-of-Design Product: Subject to compliance with requirements:
   1. True Cable
   2. Corning
   3. Commscope
   4. Panduit
   5. or owner approved equal

B. Product Options:
   1. The indicated manufacturers shall be the basis of the design and each component selected shall address the particular infrastructure requirements.

C. Description:
   1. 19-inch Rack mountable fiber optic termination shelf with maximum 12 panels slots with integrated splicing for termination inside Telecom rooms.
   2. Minimum 1U rack units' height, maximum 4U rack units'.
   3. Optical fiber termination panel housings shall be provided for cross-connecting or inter-connecting purposes between OSP, Indoor riser backbone, and/or distribution cables and the active network electronic switches, as noted in drawings.
   4. Single mode termination: Fusion splice both ends of each single mode fiber optic strand onto factory connectorized single mode pigtails mounted in connector housings assembled by the manufacturer of the single mode fiber optic cable.
      a. Single-Mode splice-on Connector is acceptable.
   5. All optical fiber housings shall be complete factory-provided assemblies that contain all components including LC duplex connector adapter panels and internal/external bend radius, strain relief and cable clamp components that are provided in a housing which includes an accessible rear access hatch.
   6. All optical fiber patch panel trays and associated bulkhead inserts shall have factory numerical labeling included in the design and presentation to the user side of the panel.
   7. The optical fiber patch panel bulkheads that house the terminating modules for the fiber backbone cabling and any horizontal optical fiber cabling shall accept TIA 568-D standard-compliant LC-connectors compatible with the optical fiber strands being terminated.

D. Accessory Products:
   1. Provide any accessory products related to the optical fiber termination panels to provide a complete and functional infrastructure system.

2.2 COPPER HORIZONTAL CABLING PATCH PANELS

A. Manufacturer List:
   1. TRENDnet
      a. 48-port blank keystone 2U HD patch panel MFG#: TC-KP48
   2. Or owner approved equal

B. Product Options:

1. The indicated manufacturers shall be the basis of the design and each component selected shall address the particular requirements for each situation.

C. Description:
1. All patch panels are to be rack/cabinet mountable within industry standard TIA/EIA 19" mounting rails unless otherwise noted.
2. All patch panels are to provide adequate space for individual port labeling on the front and cable/connector labeling on the back.
3. All installed station cable patch panels shall be Category 6A twenty-four (24) or forty-eight (48) port angled patch panels
4. All installed multi-pair backbone patch panels shall be Category 6 twenty-four (24) port or 48 port angled patch panels
5. All multi-pair backbone OSP cables terminated in a TR will be terminated on a BEC protection block. Reference Division 270526 specification.
6. The performance criteria for the patch panels must meet or exceed the performance parameters for frequency, attenuation, near end cross-talk (NEXT), attenuation to cross-talk ratio (ACR), power sum NEXT (PS-NEXT), power sum ACR (PS-ACR), equal level far end cross-talk (ELFEXT), power sum far end cross-talk (PS-FEXT), and return loss (RL) as set forth in TIA/EIA 568-C category standards.

D. Accessory Products:
1. Provide any accessory products related to the patch panels to provide a complete and functional infrastructure system.
2. Where required, provide RJ-45 jack block out device to safely secure access to unused ports and deter vandalism to jacks.
3. Provide complete with all required mounting hardware and fittings and cables needed.

PART 3 - EXECUTION EXAMINATION

A. Check actual site conditions prior to start of any work. Ensure all preceding trade work associated with the telecommunications system is accurate and complete before proceeding with installation or use of products specified in this section. Examples of work which must be checked include, but are not limited to:
1. Electrical requirements (conduit installation and capacity)
2. The telecommunications rooms are the size shown on the project drawings.
3. Adequate clearances of doors, riser spaces and ceilings for all component of the telecommunications system.
4. Examine and compare the telecommunications drawings and specifications with the drawings and specifications of other trades. Report any discrepancies between them to the A/E and obtain written instructions for changes or revisions.

3.2 INSTALLATION

A. Process:
1. Install all optical fiber and category copper termination panels/panels under the guidelines of the manufacturer's recommended instructions and per all TIA/EIA 568-C standards and manufacturer-approved industry practices as shown in the drawings.

2. The installation and performance parameters of all installed cable termination panels shall be verified by the contractor through ANSI/TIA 568-C testing procedures.
3. Label all cable termination panels to identify each port and each specific panel in accordance with the TIA/EIA 606 labeling scheme approved by the Owner.

B. Installation description:
1. Contractor shall use existing cabling management pathways and take care to place cable like with like, maintaining original segregation strategies for separating fiber and copper cables as well as any separation necessary between different types of copper cables.
2. Cables shall be dressed neatly within patch management pathways with care taken to maintain minimum bend radius of not less than 1 times the cord outer diameter for copper and not less than a 1" bend radius for fiber jumpers as per ANSI/TIA 568-D.0
3. The installation and performance parameters of all installed cable termination panels shall be verified by the contractor through ANSI/TIA 568-D testing procedures.
4. Label all cable termination panels to identify each port and each specific panel in accordance with the TIA/EIA 606 labeling scheme approved by the Owner.

3.3 RE-INSTALLATION

A. No additional burden to the owner regarding costs, network down-time, and end user interruption shall result from the re-installation of specified components due to manufacturer defects or contractor poor performance. Scheduling for re- installation work shall be coordinated, in writing, with the owner prior to beginning any re- installation work.

3.4 CLOSEOUT ACTIVITIES

A. Contractor shall provide documentation of all telecommunications system components under this section utilized throughout the site for review and reference by the Owner and A/E team.

B. Contractor to submit all as-built drawings and any test documentation required prior to acceptance by the Owner

END OF SECTION 271119

SECTION 271313 - COPPER BACKBONE CABLE FOR COMMUNICATIONS SYSTEMS

PART 1 - GENERAL

1.1 SUMMARY

A. Section Includes:
   1. Provides specifications for high pair count UTP copper backbone cabling to distribute network signals between telecommunications distribution spaces.
   2. Backbone Multi-Pair UTP Cable.

1.2 RELATED DOCUMENTS

A. Section 270500 and all divisions of the specification and general provisions of the Construction Documents.

B. Architectural, mechanical, electrical, and all technology drawings.

C. Refer to Structural Seismic Requirement design documents Specifications, if available, for Non-Structural Components for all structural bracing and support of telecommunications equipment.
   1. Anywhere cabling Standards conflict with electrical or safety Codes, the Subcontractor shall defer to 2022-CEC and any applicable local codes or ordinances or default to the most stringent requirements listed by either.
   2. Knowledge and execution of applicable codes is the sole responsibility of the Subcontractor.
   3. Any code violations committed during installation shall be remedied at the Subcontractor's expense.

1.3 QUALITY ASSURANCE

A. Qualifications – Manufacturer
   1. Component manufacturers shall be ISO 9001:2000 and offer RoHS-compliant products.

B. Qualifications – Installer:
   1. At a minimum, seventy-five percent (75%) of the onsite subcontractor-provided field technicians shall be factory-certified within 12 months by the manufacturer of the selected telecommunications system components being installed. Proof of certification shall always be available on-site for review for each field technician.

1.4 SUBMITTALS

A. Project Submittals – See Section 270500 Appendix A Project Submittals for contractor requirements for training validation, credentials, scaled shop drawings data sheet, and specialty product sample submittal(s) prior to site work.

B. Closeout Submittals - As-Built Drawings
   1. Submit all as-built drawings in accordance with the general requirements of the construction documents.
   2. Submit as-built drawings a minimum of two (2) weeks after completion of all Division- 27 work for A/E and **McFarland** reference.

1.5 WARRANTY

A. Warranty:
   1. The contractor shall provide any and all extended warranty plans at no cost to the **McFarland**-IT Project Manager.
   2. The contractor shall warranty all workmanship per the manufacturer's required installation and attachment requirements per this contract.

PART 2 - PRODUCTS

2.1 BACKBONE MULTI-PAIR CABLING

A. Basis-of-Design Product: Subject to compliance with requirements:
   1. General Cable / Superior Essex
   2. **McFarland**-IT approved equal

B. Product Options:
   1. The indicated manufacturers shall be the basis of the design, and each component selected shall address the particular infrastructure requirements.

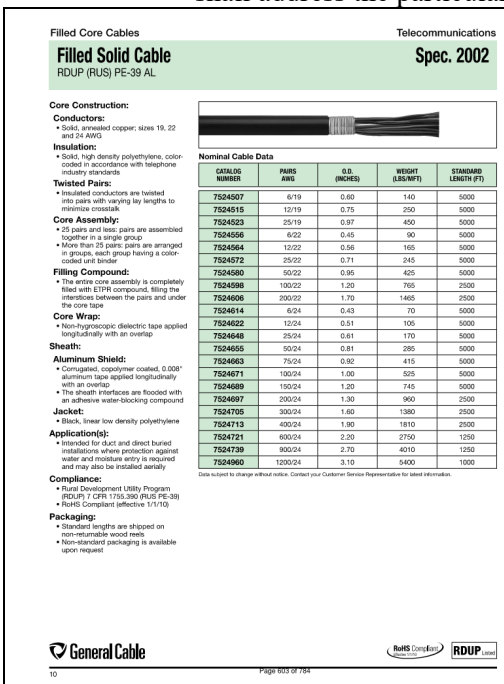

Filled Core Cables — Telecommunications

Filled Solid Cable — **Spec. 2002**
RDUP (RUS) PE-39 AL

Core Construction:

Conductors:
- Solid, annealed copper; sizes 19, 22 and 24 AWG

Insulation:
- Solid, high density polyethylene, color-coded in accordance with telephone industry standards

Twisted Pairs:
- Insulated conductors are twisted into pairs with varying lay lengths to minimize crosstalk

Core Assembly:
- 25 pairs and less: pairs are assembled together in a single group
- More than 25 pairs: pairs are arranged in groups, each group having a color-coded unit binder

Filling Compound:
- The entire core assembly is completely filled with ETPR compound, filling the interstices between the pairs and under the core tape

Core Wrap:
- Non-hygroscopic dielectric tape applied longitudinally with an overlap

Sheath:

Aluminum Shield:
- Corrugated, copolymer coated, 0.008" aluminum tape applied longitudinally with an overlap
- The sheath interfaces are flooded with an adhesive water-blocking compound

Jacket:
- Black, linear low density polyethylene

Application(s):
- Intended for duct and direct buried installations where protection against water and moisture entry is required and may also be installed aerially

Compliance:
- Rural Development Utility Program (RDUP) 7 CFR 1755.390 (RUS PE-39)
- RoHS Compliant (effective 1/1/10)

Packaging:
- Standard lengths are shipped on non-returnable wood reels
- Non-standard packaging is available upon request

Nominal Cable Data

CATALOG NUMBER	PAIRS AWG	O.D. (INCHES)	WEIGHT (LBS/MFT)	STANDARD LENGTH (FT)
7524507	6/19	0.60	140	5000
7524515	12/19	0.75	250	5000
7524523	25/19	0.97	450	5000
7524556	6/22	0.45	90	5000
7524564	12/22	0.56	165	5000
7524572	25/22	0.71	245	5000
7524580	50/22	0.95	425	5000
7524598	100/22	1.20	765	2500
7524606	200/22	1.70	1465	2500
7524614	6/24	0.43	70	5000
7524622	12/24	0.51	105	5000
7524648	25/24	0.61	170	5000
7524655	50/24	0.81	285	5000
7524663	75/24	0.92	415	5000
7524671	100/24	1.00	525	5000
7524689	150/24	1.20	745	5000
7524697	200/24	1.30	960	2500
7524705	300/24	1.60	1380	2500
7524713	400/24	1.90	1810	2500
7524721	600/24	2.20	2750	1250
7524739	900/24	2.70	4010	1250
7524960	1200/24	3.10	5400	1000

Data subject to change without notice. Contact your Customer Service Representative for latest information.

General Cable — RoHS Compliant — RDUP Listed

10 — Page 603 of 784

OSP – U/UTP Cat3 Cable

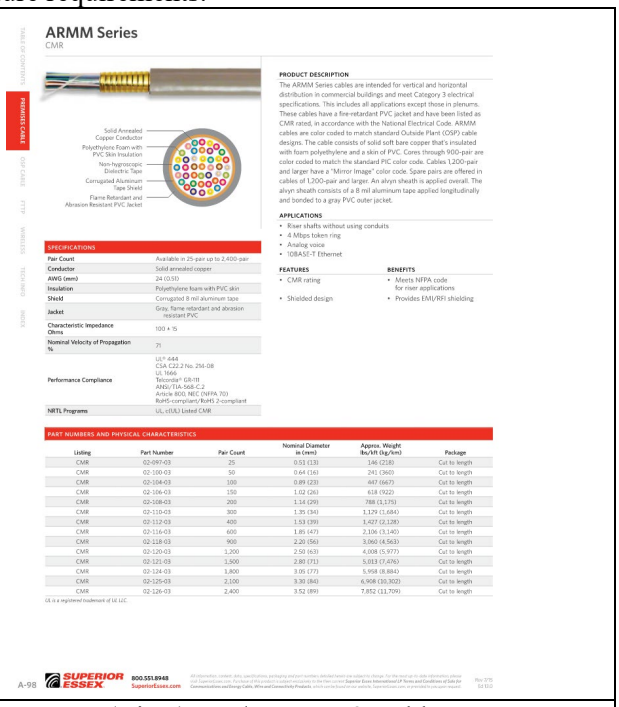

ARMM Series
CMR

PRODUCT DESCRIPTION
The ARMM Series cables are intended for vertical and horizontal distribution in commercial buildings and meet Category 3 electrical specifications. This includes all applications except those in plenums. These cables have a fire-retardant PVC jacket and have been listed as CMR rated, in accordance with the National Electrical Code. ARMM cables are color coded to match standard Outside Plant (OSP) cable designs. The cable consists of solid soft bare copper that's insulated with foam polyethylene and a skin of PVC. Cores through 900-pair are color coded to match the standard PIC color code. Cables 1,200-pair and larger have a "Mirror Image" color code. Spare pairs are offered in cables of 1,200-pair and larger. An alvyn sheath is applied overall. The alvyn sheath consists of a 8 mil aluminum tape applied longitudinally and bonded to a gray PVC outer jacket.

Solid Annealed Copper Conductor
Polyethylene Foam with PVC Skin Insulation
Non-hygroscopic Dielectric Tape
Corrugated Aluminum Tape Shield
Flame Retardant and Abrasion Resistant PVC Jacket

APPLICATIONS
- Riser shafts without using conduits
- 4 Mbps token ring
- Analog voice
- 10BASE-T Ethernet

FEATURES
- CMR rating
- Shielded design

BENEFITS
- Meets NFPA code for riser applications
- Provides EMI/RFI shielding

SPECIFICATIONS

Pair Count	Available in 25-pair up to 2,400-pair
Conductor	Solid annealed copper
AWG (mm)	24 (0.51)
Insulation	Polyethylene foam with PVC skin
Shield	Corrugated 8 mil aluminum tape
Jacket	Gray, flame retardant and abrasion resistant PVC
Characteristic Impedance Ohms	100 ± 15
Nominal Velocity of Propagation %	71
Performance Compliance	UL® 444 CSA C22.2 No. 214-08 UL 1666 Telcordia® GR-111 ANSI/TIA-568-C.2 Article 800, NEC (NFPA 70) RoHS-compliant/RoHS 2-compliant
NRTL Programs	UL, cULUL Listed CMR

PART NUMBERS AND PHYSICAL CHARACTERISTICS

Listing	Part Number	Pair Count	Nominal Diameter in (mm)	Approx. Weight lbs/kft (kg/km)	Package
CMR	02-097-03	25	0.51 (13)	146 (218)	Cut to length
CMR	02-100-03	50	0.64 (16)	241 (360)	Cut to length
CMR	02-104-03	100	0.89 (23)	447 (667)	Cut to length
CMR	02-106-03	150	1.02 (26)	618 (922)	Cut to length
CMR	02-108-03	200	1.14 (29)	788 (1,175)	Cut to length
CMR	02-110-03	300	1.35 (34)	1,129 (1,684)	Cut to length
CMR	02-112-03	400	1.53 (39)	1,427 (2,128)	Cut to length
CMR	02-116-03	600	1.85 (47)	2,106 (3,140)	Cut to length
CMR	02-118-03	900	2.20 (56)	3,060 (4,563)	Cut to length
CMR	02-120-03	1,200	2.50 (63)	4,008 (5,977)	Cut to length
CMR	02-121-03	1,500	2.80 (71)	5,013 (7,476)	Cut to length
CMR	02-124-03	1,800	3.05 (77)	5,958 (8,884)	Cut to length
CMR	02-125-03	2,100	3.30 (84)	6,908 (10,302)	Cut to length
CMR	02-126-03	2,400	3.52 (89)	7,852 (11,709)	Cut to length

UL is a registered trademark of UL LLC.

A-98 — SUPERIOR ESSEX — 800.551.8948 — SuperiorEssex.com

ARMM (Riser) – U/UTP Cat3 Cable

C. Description:
   1. All voice and data ISP and OSP copper backbone cables are to be rated per the constructed conditions and verified by the contractor before installation. Per code, a plenum CMP cable is always installed when a communications cable is exposed in a plenum air space. The contractor is responsible for bidding, purchasing, installing, and verifying the rating of the ISP and OSP cable for the specific construction conditions.
   2. Backbone cables exposed to moisture shall contain moisture-blocking materials to prevent damage to cable performance.
   3. Backbone multi-pair UTP cable shall be Category-3 copper UTP, twenty-four (24) AWG cable.
   4. The performance criteria for the UTP backbone cable shall be in accordance with the specific standards for the particular cable's rating. A category-3 rated cable must perform up to or beyond the current specification parameters for the published category-3 rating by TIA/EIA 568-D.2.
   5. Installed cable shall have appropriate cable construction, including external jacket properties when installed in aerial, outdoor, underground, and corrosive environments.

D. Accessory Products:
   1. Provide any accessory products related to the UTP copper backbone cabling required to provide a complete and functional infrastructure system.

PART 3 - EXECUTION

3.1 EXAMINATION

A. Check actual site conditions prior to the start of any work. Ensure all preceding trade work associated with the telecommunications system is accurate and complete before installing or using products specified in this section. Examples of work that must be checked include, but are not limited to:
   1. Electrical requirements (conduit installation and capacity)
   2. The telecommunications rooms are the size shown on the project drawings.
   3. Adequate clearance of doors, riser spaces, and ceilings for all components of the telecommunications system.
   4. Examine and compare the telecommunications drawings and specifications with the drawings and specifications of other trades. Report any discrepancies between them to the A/E and obtain written instructions for changes or revisions.

3.2 INSTALLATION

A. Process:
   1. Install all copper backbone/station cables per the manufacturer's recommended installation instructions under ANSI/TIA 568D-Series, ANSI/TIA 758, and BICSI OSP design guidelines in this project drawing set.
   2. Install all cables with proper attention to bend radii, pulling method, attachment method, and pulling forces. The cable manufacturer's specifications for each cable type shall be followed exactly.
   3. Backbone cable shall be visually inspected for insufficient bend radius during and after

pulling. Damaged cables, or those installed under questionable methods and/or circumstances, shall be replaced at no additional cost to the owner.

4. All cables shall be pulled using an appropriate measuring device to ensure that the specified force is not exceeded, as noted in manufacture installation guidelines.
5. Install backbone cables with attention to aesthetic means and methods when routing cabling within IT spaces.
6. No backbone cable shall be left unsupported for more than four (4) feet, three (3) feet preferred, vertically or horizontally at any time.
7. All backbone cables shall be clearly labeled on both ends and in an accessible location no more than one (1) foot from each cable end.

3.3 RE-INSTALLATION

A. No additional burden to the owner regarding costs, network downtime, and end-user interruption shall result from the re-installation of specified components. Scheduling for re- installation work shall be coordinated, in writing, with the owner prior to beginning any re-installation work.

3.4 CLOSEOUT ACTIVITIES

A. Contractor shall provide documentation of all telecommunications system components under this section utilized throughout the site for review and reference by the Owner and A/E team.

B. Contractor to submit all as-built drawings and any test documentation (analog – continuity test) required prior to acceptance by the Owner.

END OF SECTION 271313

SECTION 271323 - COMMUNICATIONS OPTICAL FIBER BACKBONE CABLING

PART 1 - GENERAL

1.1 SUMMARY

A. Section Includes:
1. Provides specifications for optical fiber backbone cabling to distribute optical network signals between telecommunications distribution spaces and equipment.
2. Backbone Single-mode Optical Fiber Cable

1.2 RELATED DOCUMENTS

A. Section 270500 and all divisions of the specification and general provisions of the Construction Documents.

B. Architectural, mechanical, electrical, and all technology drawings.

C. Refer to Structural Seismic Requirement design documents Specifications, if available, for Non-Structural Components for all structural bracing and support of telecommunications equipment.

1.3 CLOSEOUT SUBMITTALS

A. As-Built Drawings:
1. Submit all as-built documentation in accordance with the general requirements of the construction documents.
2. Cabling as-built drawings must contain detailed location and identification information coordinated with the as-built cable schedules.
3. All cabling must meet or exceed applicable TIA/EIA testing requirements and any additional parameters outlined in the Commissioning of Communications specification section 27 08 00.
4. Test results must be submitted for owner review and approval adhering to the General Contractor schedule milestones related to the projects active systems integration.

1.4 QUALITY ASSURANCE

A. Qualifications – Manufacturer
1. Component manufactures shall be ISO 9001:2000 and offer products that are RoHS compliant.

B. Qualifications – Installer:
1. At a minimum, seventy-five percent (75%) of the onsite contractor provided field technicians shall be factory certified within 12 months by the manufacturer of the selected telecommunications system components being installed. Proof of certification shall be available on site for review at all times for each field technician.

PART 2 - PRODUCTS

2.1 BACKBONE SINGLE-MODE OPTICAL CABLING

A. Basis-of-Design Product: Subject to compliance with requirements:
   1. Corning
   2. Commscope
   3. Or owner approved equal.

B. Product Options:
   1. The manufacturers noted above shall be the only manufacturers acceptable to the Owner and A/E. Cable construction shall be a hybrid multi-mode and single-mode fiber stands combined in a single protection jacket as indicated on the project drawings.

C. Description:
   1. All backbone single-mode optical fiber cable shall be capable of 10 Gb/s Ethernet signal transmission to 10,000 meters in the 1310nm operating window. Maximum attenuation for a single-mode cable shall be no greater than 0.4dB per kilometer using 1310nm and 0.3dB per kilometer using 1550nm wavelengths respectively.
   2. Each optical fiber strand shall be sufficiently free of surface imperfections and inclusions to meet the optical, mechanical, and environmental requirements of this specification and all EIA/TIA 568-D.3 and 568-D.3-1 performance parameters.
   3. All optical fibers inside each individual cable shall be provided in counts indicated in the drawings and usable to the fullest capacity specified by the manufacturer and meet required specifications at all times.
   4. The optical fiber cables shall be rated per the installation environment as required by the local Authority Having Jurisdiction and/or National Fire Codes. Select an appropriate cable construction, including external jacket properties, when installing optical fiber cables in aerial, outdoor, underground and corrosive environments.

D. All SMF shall meet or exceed TIA compliant network cable-testing device certification by an independent laboratory, such as ETL, for verification of high speed, TIA/EIA T568C-compliant performance.Accessory Products:
   1. Provide any accessory products related to the optical fiber backbone cabling required to provide a complete and functional infrastructure system.

PART 3 - EXECUTION EXAMINATION

A. Check actual site conditions prior to start of any work. Ensure all preceding trade work associated with the telecommunications system is accurate and complete before proceeding with installation or use of products specified in this section. Examples of work which must be checked include, but are not limited to:
   1. Electrical requirements (conduit installation and capacity)
   2. The telecommunications rooms are the size shown on the project drawings.
   3. Adequate clearances of doors, riser spaces and ceilings for all component of the telecommunications system.
   4. Examine and compare the telecommunications drawings and specifications with the drawings and specifications of other trades. Report any discrepancies between them to the

A/E and obtain written instructions for changes or revisions.

3.2 INSTALLATION

A. Process:
1. Install all backbone cable per the manufacturer's required installation instructions, under the guidelines of TIA/EIA 568C and BICSI, and in quantities indicated in the drawings.
2. Install all cables with proper attention paid to bend radii, pulling method, attachment method, and pulling forces. The cable manufacturer's requirement specifications for each particular cable type shall be followed exactly.
3. Backbone cable shall be visually inspected for non-compliant bend radius during and after pulling. Damaged cables, or those installed under questionable methods and/or circumstances shall be replaced at no additional cost to the owner.
4. All cable shall be pulled using an appropriate measuring device to ensure that the specified force is not exceeded as noted in manufacturers requirements.
5. Install backbone cables with attention paid to aesthetic means and methods when routing cabling within IT spaces. No backbone cable shall be left unsupported for more than three (3) feet vertically or horizontally at any time.
6. Fiber optic cables shall be placed in neat bundles separated from other communications cabling. Fiber optic cables shall be neatly placed and bundled with Velcro ties to the horizontal and vertical cable management and runways at minimum 4-foot intervals, not to exceed every 4th rung, plus all locations where the cables change direction.
7. Provide radius drop out fittings at all locations where fiber optic cables transition from vertical to horizontal cable management systems.
8. All backbone cable shall be securely fastened to the termination shelf with a manufacturers strain relief bracket and termination panel cable clamp in a way that does not damage the optical fiber strands or impede the performance of the media. This secure fastening method shall also serve to insure a secure termination environment.
9. A minimum of three feet (3'-0") of each optical fiber strand shall be left protected within the termination shelf for any future re-termination of a particular optical fiber strand.
10. All backbone cables shall be clearly labeled on both ends and in an accessible location no more than one (1) foot from each cable end.

3.3 RE-INSTALLATION

A. No additional burden to the owner regarding costs, network down-time, and end user interruption shall result from the re-installation of specified components. Scheduling for re- installation work shall be coordinated, in writing, with the owner prior to beginning any re- installation work

3.4 CLOSEOUT ACTIVITIES

A. Contractor shall provide documentation of all telecommunications system components under this section utilized throughout the site for review and reference by the Owner and A/E team.

B. Contractor to submit all as-built drawings and any test documentation required prior to acceptance by the Owner

END OF SECTION 271323

SECTION 271513 - COPPER HORIZONTAL CABLE FOR COMMUNICATIONS SYSTEMS

PART 1 - GENERAL

1.1 SUMMARY

A. Section Includes:
   1. Provides specifications for four-pair U/UTP copper horizontal workstation cabling to distribute network signals from telecommunications distribution spaces to work area outlet locations.
   2. Category 6A 24 AWG Shielded

1.2 RELATED DOCUMENTS

A. Section 270500 and all divisions of the specification and general provisions of the Construction Documents.

B. Architectural, mechanical, electrical, and all technology drawings.

C. Refer to Structural Seismic Requirement design documents Specifications, if available, for Non-Structural Components for all structural bracing and support of telecommunications equipment.
   1. Anywhere cabling Standards conflict with electrical or safety Codes, the Subcontractor shall defer to 2022-CEC and any applicable local codes or ordinances or default to the most stringent requirements listed by either.
   2. Knowledge and execution of applicable codes is the sole responsibility of the Subcontractor.
   3. Any code violations committed during installation shall be remedied at the Subcontractor's expense.

1.3 QUALITY ASSURANCE

A. Qualifications – Manufacturer
   1. Component manufacturers shall be ISO 9001:2000 and offer RoHS-compliant products.

B. Qualifications – Installer:
   1. The contractor shall coordinate the final TMGB connection with the project electrician.
   2. At a minimum, seventy-five percent (75%) of the onsite subcontractor-provided field technicians shall be factory-certified within 12 months by the manufacturer of the selected telecommunications system components being installed. Proof of certification shall always be available on-site for review for each field technician.

1.4 SUBMITTALS

A. Project Submittals – See Section 270500 Appendix A Project Submittals for contractor requirements for training validation, credentials, scaled shop drawings data sheet, and specialty product sample submittal(s) prior to site work.

B. Closeout Submittals - As-Built Drawings
   1. Submit all as-built drawings in accordance with the general requirements of the construction documents.
   2. Submit bonding and grounding project work from scaled Shop Drawings in the Revit model in addition to the other Div. 27 & 28 project submittal requirements.
   3. Submit as-built drawings a minimum of two (2) weeks after completion of all Division- 27 work for A/E and **McFarland** reference.

1.5 WARRANTY

A. Warranty:
   1. The contractor shall provide all extended warranty plans at no cost to the **McFarland**-IT Project Manager.
   2. The contractor shall warranty all workmanship per the manufacturer's required installation and attachment requirements.

PART 2 - PRODUCTS

2.1 FOUR PAIR CATEGORY 6A CMP CABLING

A. Basis-of-Design Product: Subject to compliance with requirements:
   1. CommScope
   2. Panduit
   3. Eaton
   4. or Approved Equal
      a. Category 6A

B. Product Options:
   1. The indicated manufacturers shall be the basis of the design, and each component selected shall address the particular infrastructure requirements.

C. Description:
   1. All category-6A performance four (4) pair cables shall consist of eight (8) twenty-four (23) gauge, or greater, thermoplastic insulated solid twisted conductors that utilize the industry standard color code designations.
   2. The performance criteria for four (4) pair cables shall be above and beyond specific EIA/TIA 568-C.2 standards for the particular cable's rating and shall show stable performance with documented electrical characterization out to 500 MHz.
   3. Four (4) pair cables must perform over and above each current specification parameter for the latest published twisted pair, 10Gb performance cable solution.
   4. Cables shall be rated per the installation environment as required by the local AHJ and

local codes.

5. Select an appropriate cable construction, including external jacket properties, when installing cables in aerial, outdoor, underground, and corrosive environments.
6. Cable to be run continuously without splices.

D. Accessory Products:
1. The indicated manufacturers shall be the basis of the design, and each component selected shall address the particular infrastructure requirements.

2.2 FOUR PAIR CATEGORY 6A OSP CABLING

A. Basis-of-Design Product: Subject to compliance with requirements:
1. **McFarland**-IT approved equal

B. Product Options:
1. The indicated manufacturers shall be the basis of the design, and each component selected shall address the particular infrastructure requirements.

C. Description:
1. Category-6A 10GX performance - as listed in 2.1 above -

PART 3 - EXECUTION

3.1 EXAMINATION

A. Check actual site conditions prior to the start of any work. Ensure all preceding trade work associated with the telecommunications system is accurate and complete before installing or using products specified in this section. Examples of work that must be checked include, but are not limited to:
1. Electrical requirements (conduit installation and capacity)
2. The telecommunications rooms are the size shown on the project drawings.
3. Adequate clearance of doors, riser spaces, and ceilings for all components of the telecommunications system.
4. Examine and compare the telecommunications drawings and specifications with the drawings and specifications of other trades. Report any discrepancies between them to the A/E and obtain written instructions for changes or revisions.

3.2 INSTALLATION

A. Process:
1. Install all horizontal station cabling per the manufacturer's installation requirements and **McFarland**-IT Standards and Specifications. These requirements are based on ANSI/TIA 568D-Series and BICSI methodologies. IDF schedules by symbol shall be used to identify end devices and their quantities as indicated in the project drawings.
2. Locations requiring horizontal cable shall be, but not limited to, CCTV, Elevator control panels, work area outlet, and WiFi.

3. Install all cables with proper attention to bend radii, pulling method, attachment method, and pulling forces. All cable shall be pulled using an appropriate measuring device to ensure that the specified pulling-tension (force on cable) is not exceeded, as noted in BICSI installation guidelines. Also, refer to the cable manufacturer's specifications for exact cable requirements per the particular cable type.
4. All cables shall be visually inspected for insufficient bend radius during and after pulling. Damaged cables, or those installed under questionable methods and/or circumstances, shall be replaced at no additional cost to the owner.
5. The contractor shall ensure that all TIA/EIA and industry standards are met regarding the maximum stripping length of cable jackets. No four (4) pair UTP cables shall have more than three-eight inch (3/8”) of cable jacket removed beyond the termination points.
6. Install the horizontal cabling with attention to aesthetic means and methods when routing cabling within IT spaces. All horizontal cabling shall terminate in their respective floor serving technology space; specifically, cables from floor outlets must terminate in their corresponding floor telecom room.
7. All cabling distributed horizontally through metal stud framing shall have plastic protective bushings inserted to protect cables prior to installation.
8. All cables shall be clearly labeled on both ends and in an accessible location no more than six inches (0’-6”) from the cable ends.
9. The owner reserves the right to specify a new location for any outlet or equipment without increasing contractor unit cost – providing that the new location is specified prior to roughing-in of technology cable and is not farther than ten (10) feet away from the original location specified.
10. Communication EMT conduit sleeves shall receive conduit waterfall to control the bend radius of the communication cable to a minimum of a 4” radius.

3.3 RE-INSTALLATION

A. No additional burden to the owner regarding costs, network downtime, and end-user interruption shall result from re-installing specified components. Scheduling for re-installation work shall be coordinated, in writing, with the owner prior to beginning any re-installation work.

3.4 CLOSEOUT ACTIVITIES

A. Contractor shall provide documentation of all telecommunications system components under this section utilized throughout the site for review and reference by the Owner and A/E team.

B. Contractor to submit all as-built drawings and any test documentation required prior to acceptance by the Owner.

END OF SECTION 271513

SECTION 271543 - COMMUNICATIONS FACEPLATES AND CONNECTORS

PART 1 - GENERAL

1.1 SUMMARY

A. Section Includes:
1. Provides specifications for horizontal workstation cable termination components and outlet housing component. Includes wall-mount, floor-mount, and ceiling-mount components to support the various workstation outlets throughout the cabling plant.
2. Copper Category 6A Connectors UTP
3. Single-Mode Optical Fiber Pigtail Connector Assemblies/Splice-On Connectors
4. Outlet Housing Components (faceplates etc.)

1.2 RELATED DOCUMENTS

A. Section 270500 and all divisions of the specification and general provisions of the Construction Documents.

B. Architectural, mechanical, electrical, and all technology drawings.

C. Refer to Structural Seismic Requirement design documents Specifications, if available, for Non-Structural Components for all structural bracing and support of telecommunications equipment

1.3 CLOSEOUT SUBMITTALS

A. As-Built Drawings:
1. Submit all as-built drawings in accordance with the general requirements of the construction documents.
2. Submit as-built drawings a minimum of two (2) weeks after completion of all Division- 27 work for A/E and Owner reference:

1.4 QUALITY ASSURANCE

A. Qualifications – Manufacturer
1. Component manufactures shall be ISO 9001:2000 and offer products that are RoHS compliant.

B. Qualifications – Installer:
1. At a minimum, seventy-five percent (75%) of the onsite contractor provided field technicians shall be factory certified within 12 months by the manufacturer of the selected telecommunications system components being installed. Proof of certification shall be available on site for review at all times for each field technician.

PART 2 - PRODUCTS

2.1 COPPER UTP CONNECTORS

A. Basis-of-Design Product: Subject to compliance with requirements:
1. TRENDnet
a. Cat6 RJ45 Keystone Jack 50-Pack Bundle (Mfg #: TC-K50C6BK
2. Or owner approved equal

B. Product Options:
1. The manufacturers noted above shall be the only manufacturers acceptable to the Owner and A/E.

C. Description:
1. All UTP connectors shall be rated to perform at or above current TIA/EIA performance parameters of the UTP cabling it is terminating within the communications system.
2. All UTP connectors shall have an eight (8) position, eight (8)-conductor module that accepts RJ-45 plugs.
3. When utilized as part of a channel or permanent link, all high performance modular outlet connectors shall not decrease the horizontal cable elevated performance transmission requirements before and after installation as specified in ANSI/TIA/EIA 568-C Commercial Building Telecommunications Cabling Standard (horizontal cable section) in all noted performance parameters.

D. Accessory Products:
1. Provide any accessory products related to the UTP connectors required to provide a complete and functional infrastructure system.
2. Port RJ-45 jack block out device to safely secure access to unused ports and deter vandalism to jacks.
3. Provide complete with all required mounting hardware and fittings and cables needed.

2.2 SINGLE MODE OPTICAL FIBER PIGTAIL CONNECTORS ASSEMBLIES

A. Manufacturer List:
1. Owner approved equal

B. Product Options:
1. The manufacturers noted above shall be the only manufacturers acceptable to the Owner and A/E.

C. Description:
1. Single mode Optical fiber pigtail connector assemblies housed in manufacturers connector panels.
2. AFL FUSEConnect Splice On Connector is acceptable.
3. Duplex LC style connectors.
4. Maximum insertion loss across mated pair shall be less than 0.3 dB, tested per FOTP-171 Method A. Typical Insertion loss should be maximum of 0.15 dB. Minimum return loss shall be less than 60.5 dB, tested per FOTP-171. Typical return loss should be 60 dB.

5. Pigtails shall have minimum 2 meters of attached cordage.
6. Pigtails shall be assembled and tested by the connector manufacturer.

D. Accessory Products:
1. Provide any accessory products and tool kits related to the termination of the optical fiber connectors to provide a complete and functional infrastructure system.

2.3 OUTLET HOUSING COMPONENTS

A. Manufacturer List:
1. Owner approved equal
2. All faceplate colors shall be coordinated in the field and architectural finish before procurement.

B. Product Options:
1. The manufacturers noted above shall be the only manufacturers acceptable to the Owner and A/E.

C. Description:
1. All outlet housings at the various technology outlet locations shall provide the designated number modular insert ports as indicated in the drawings.
2. All flush-mounted faceplates shall be provided per the port configurations shown on the telecom drawings.
3. Faceplates for flush floor mounted outlets shall be coordinated with the floor box or poke thru device that will be selected and installed outside the scope of this section.
4. System furniture faceplates shall be capable of fitting in the furniture system selected by the Owner. Furniture faceplates shall be provided per the port configurations shown on the telecom drawings. Furniture faceplate extenders shall be used (if required) to maintain proper bend radii within the furniture raceway/pathway.
5. Surface mounted boxes shall be capable of the quantity of outlet jack requirements at each outlet locations indicted in the drawings.
6. All outlet-housings shall provide a clear TIA/EIA 606-A labeling location for both the individual outlet port and the entire outlet housing location, unless otherwise indicated in the project drawings.

D. Accessory Products:
1. Provide any accessory products related to the workstation outlet housing components required to provide a complete and functional infrastructure system.

PART 3 - EXECUTIONEXAMINATION

A. Check actual site conditions prior to start of any work. Ensure all preceding trade work associated with the telecommunications system is accurate and complete before proceeding with installation or use of products specified in this section. Examples of work which must be checked include, but are not limited to:
1. Electrical requirements (conduit installation and capacity)
2. The telecommunications rooms are the size shown on the project drawings.
3. Adequate clearances of doors, riser spaces and ceilings for all component of the

telecommunications system.

4. Examine and compare the telecommunications drawings and specifications with the drawings and specifications of other trades. Report any discrepancies between them to the A/E and obtain written instructions for changes or revisions.

3.2 INSTALLATION

A. Process:

1. Install all connectors and couplers under the guidelines of the manufacturers' recommended instructions and per all TIA/EIA 568D standards, BICSI guidelines, and manufacturer approved industry practices.
2. The installation and performance parameters of all installed couplers and connectors shall be verified by the trade contractor through TIA/EIA 568D testing procedures.
3. Color of all outlet housing components shall be coordinated with the Owner before purchase and installation.
4. All technology outlets located on walls shall be flush mounted, level and plumb.
5. All technology outlets shall be mounted at right angles and parallel to the floor, unless installation requirements or design dictate otherwise.
6. Install blank inserts in outlet housing spaces that are not being filled with cable termination modules. Blank inserts shall match the workstation housing color, unless otherwise indicated in the drawings.
7. All outlets located in systems furniture may be served from a wall adjacent to the furniture cluster or a floor box. If the cable is exposed prior to entering furniture raceway, install spiral wrap tubing to protect the cable per the manufacturer's recommendations.
8. All outlet housings as well as each individual utilized port must be labeled in accordance with the Owner-approved labeling scheme.

3.3 RE-INSTALLATION

A. No additional burden to the owner regarding costs, network down-time, and end user interruption shall result from the re-installation of specified components. Scheduling for re- installation work shall be coordinated, in writing, with the owner prior to beginning any re- installation work

3.4 CLOSEOUT ACTIVITIES

A. Contractor shall provide documentation of all telecommunications system components under this section utilized throughout the site for review and reference by the Owner and A/E team.

B. Contractor to submit all as-built drawings and any test documentation required prior to acceptance by the Owner

END OF SECTION 271543

SECTION 271619 - COMMUNICATION PATCH CORDS, STATION CORDS, AND CROSS CONNECT WIRE

PART 1 - GENERAL

1.1 SUMMARY

A. Section Includes:
   1. Provides specifications for Category 6A SD and optical fiber horizontal cable patching to distribute network signals.
   2. Copper Category 6A Patch Cords
   3. Optical Fiber Patch Cords.

1.2 RELATED DOCUMENTS

A. Section 270500 and all divisions of the specification and general provisions of the Construction Documents.

B. Architectural, mechanical, electrical, and all technology drawings.

C. Refer to Structural Seismic Requirement design documents Specifications, if available, for Non-Structural Components for all structural bracing and support of telecommunications equipment.

1.3 CLOSEOUT SUBMITTALS

A. As-Built Drawings:
   1. Submit all as-built drawings in accordance with the general requirements of the construction documents.
   2. Submit as-built drawings a minimum of two (2) weeks after completion of all Division- 27 work for A/E and Owner reference:

1.4 QUALITY ASSURANCE

A. Qualifications – Manufacturer
   1. Component manufactures shall be ISO 9001:2000 and offer products that are RoHS compliant.

B. Qualifications – Installer:
   1. At a minimum, seventy-five percent (75%) of the onsite contractor provided field technicians shall be factory certified within 12 months by the manufacturer of the selected telecommunications system components being installed. Proof of certification shall be available on site for review at all times for each field technician.

PART 2 - PRODUCTS

2.1 COPPER UTP/STP PATCH CORDS

A. Basis-of-Design Product: Subject to compliance with requirements:
   1. Owner Approved Equal

B. Product Options:
   1. The indicated manufacturers shall be the basis of the design and each assembly selected shall address the particular infrastructure requirements.

C. Description:
   1. Category UTP Copper patch cords for equipment patching (RJ-45 to RJ-45 Cords): Modular RJ45 male plug connector's equipped with (8) eight gold anodized pins shall be factory terminated at each end of the patch cords. Modular plug connectors will be snag free in design or will utilize a molded plastic boot to cover the modular plug tab. Category 6A UTP SD cords shall be 26 AWG.
   2. All patch cords shall conform to the requirements of the EIA/TIA 568C.2 standard performance parameters and shall also guarantee headroom margin above the minimum EIA/TIA 568C standard NEXT and PSNEXT requirements; and shall provide positive ACR to 5000 MHz-km as part of the connectivity system.
   3. All copper UTP patch cords shall have stranded conductors that match the EIA/TIA 568-C performance characteristics of the category cable specified.
   4. Patch cord performance levels shall be equal to or greater than the performance level of the installed UTP cabling system.
   5. All copper patch cord lengths for patching inside the telecom rooms are to be provided appropriate to patching from network equipment ports to the copper patch panels ports within the Server Room and IDF.

D. Accessory Products:
   1. Provide any accessory products related to the UTP connectors required to provide a complete and functional infrastructure system.
   2. Port RJ-45 patch cord lock-in device to safely secure access to patched cords and deter accidental removal to network connection.
   3. Provide complete with all required mounting hardware and fittings and cables needed.

2.2 OPTICAL FIBER PATCH CORDS

A. Basis-of-Design Product: Subject to compliance with requirements:
   1. AFL/Dura-Line
   2. Or Owner Approved Equal

B. Product Options:
   1. The indicated manufacturers shall be the basis of the design and each assembly selected shall address the particular infrastructure requirements.

C. Description:

1. All optical fiber patch cords shall conform to the requirements of the EIA/TIA 568C.3- 1 standard performance parameters for the multimode or single-mode optical fiber and shall have the same manufacturer, cable type, connector and polish as noted for the backbone fiber.
2. All optical patch cords shall have push-pull strain relief boot and duplex clip.
3. All optical fiber patch cord lengths are to be provided appropriate to patching from network equipment ports to the optical fiber patch panels ports within the Data Center and IDF.
4. It is the responsibility of the contractor to verify lengths and counts of optical fiber patch cords with the owner prior to purchase.
5. All single-mode patch cord colors are to be industry standard yellow and provided in a duplex configuration.
6. Any optical fiber patch cords purchased without written authorization by the Owner are purchased at the contractor's own risk.

D. Accessory Products:
1. Provide any accessory products related to the optical fiber connectors required to provide a complete and functional infrastructure system.

PART 3 - EXECUTION EXAMINATION

A. Check actual site conditions prior to start of any work. Ensure all preceding trade work associated with the telecommunications system is accurate and complete before proceeding with installation or use of products specified in this section. Examples of work which must be checked include, but are not limited to:
1. Electrical requirements (conduit installation and capacity)
2. The telecommunications rooms are the size shown on the project drawings.
3. Adequate clearances of doors, riser spaces and ceilings for all component of the telecommunications system.
4. Examine and compare the telecommunications drawings and specifications with the drawings and specifications of other trades. Report any discrepancies between them to the A/E and obtain written instructions for changes or revisions.

3.2 INSTALLATION

A. Process:
1. Install all horizontal cable per the manufacturer's recommended installation instructions, under the guidelines of TIA/EIA 568 C and BICSI.
2. Category 6A equipment Patch cords: Provide (2) copper patch cords (one for each end of the cable termination) for every Category cable installed.
3. Fiber Optic Equipment Patch cords: Provide (2) fiber optic LC duplex patch cords (one for each end of fiber termination) for every pair of fiber strands installed.
4. All patch cord lengths are to be provided appropriate to patch from rack mounted network equipment ports to the rack mounted horizontal station outlet patch panel ports within the Data Room/IDF and from the workstation outlet to the computer/or other IP end device NIC card/RJ45 port.
5. Provide new, sealed patch cords in lengths, colors and counts approved in writing by the owner.

6. It will be the responsibility of the communication contractor to provide install all Category 6A and Fiber patch cords per direction and coordination of owner IT dept.

3.3 RE-INSTALLATION

A. No additional burden to the owner regarding costs, network down-time, and end user interruption shall result from the re-installation of specified components. Scheduling for re- installation work shall be coordinated, in writing, with the owner prior to beginning any re- installation work.

3.4 CLOSEOUT ACTIVITIES

A. Contractor shall provide documentation of all telecommunications system components under this section utilized throughout the site for review and reference by the Owner and A/E team.

B. Contractor to submit all as-built drawings and any test documentation required prior to acceptance by the Owner.

END OF SECTION 271619

SECTION 274116 - INTEGRATED AUDIO-VIDEO SYSTEMS AND EQUIPMENT

PART 1 - GENERAL

1.1 SCOPE OF WORK

A. The work under this section includes all final design, all labor, material, equipment, supplies, control and audio system programming, Speaker Alignment, testing, transportation and accessories required to furnish and install a complete-seamless, integrated Audiovisual Systems (AVS) as indicated on the drawings and as specified herein. The AVS shall be defined as all cables, equipment, products, etc, as indicated on the drawings, and mentioned in these specifications.

B. It is the intent of the Drawings and Specifications, for the Contractor to design, provide and install a complete, fully operational, and tested system.

C. All miscellaneous system components including, but not limited to, plenum cables, speakers, signal converters, interface panels and components, termination equipment, patch panels, backboards, converters, matrix switchers, digital video extenders, controllers, digital signal processors, amplifiers, pre-amps, custom faceplates, mounting hardware, fasteners, racks, cabinets, and any other related items shall be furnished and installed complete under this section, such that the system shall perform all functions listed herein in compliance with all of the specified requirements.

D. Schedule is paramount to the project's success. With this, the Contractor will have to be a team player, continually working with the team to facilitate expeditious design, procurement, and construction processes.

E. Project Summary

1. Community Room E.O.C. 101
   Shall have (1) wall-mounted projection screen, (1) high-lumen ceiling-mounted projector, zoned ceiling-mounted speakers, (1) wall-mounted control panel, (1) lectern with gooseneck microphone and AV input panel, and connection via floor box AV input, (1) 4-channel wireless microphone combo kits to support live video streaming and remote presentation. The room shall have (4) floor boxes and (4) wall plates with HDBaseT connectivity to allow for the connection of local video inputs at the floor boxes and portable displays at the walls. The room shall have wireless presentation capability using the room's Access Points.
2. Conference/Major Case Room 136
   The room will have an ultra-short-throw lamp-free laser projector for in-room presentations, utilizing the built-in Miracast interface. The room will be connected to the Community room via the HDBaseT interface. Media reproduction will be via the projector's built-in loudspeakers. A handheld remote controller will be utilized for all operational functions.

1.2 RELATED WORK, STANDARDS, DOCUMENTS AND PUBLICATIONS

A. Documents affecting work of this section include, but are not necessarily limited to, General Conditions, Supplementary Conditions, and sections of all Divisions of these specifications.

B. All applicable portions shall apply to this section as though written herein completely.

C. Contractor is responsible to reference all Architectural, Mechanical, Electrical, and Structural Drawings for additional information about pathways and or obstructions.

1.3 GENERAL REQUIREMENTS

A. Manufacturer: The term "manufacturer" shall be defined as the company, or group of companies, that produces the products meeting the requirements of Section 2 of this document. The manufacturer shall have a minimum of ten (10) years' experience in manufacturing products of this type and shall be ISO 9001 Certified.

B. Contractor: The term "contractor" shall be defined as the company, or group of companies, that installs the products per Section 3 of this document. The contractor selected to provide the installation of this system shall be certified by the manufacturer in all aspects of design, installation and testing of the products described herein.

1. The Contractor shall hold a valid State of California C-7 Low-Voltage license, shall have completed at least ten (10) projects of equal scope, shall have been in business of furnishing and installing systems of this scope and magnitude for at least five (5) years, and capable of being bonded to assure the Owner's Project Manager of performance and satisfactory service during the guarantee period.
2. The Contractor shall hold all other licenses required by the legally constituted authorities having jurisdiction over the work.
3. All work shall be performed under the supervision of a company accredited by the manufacturer and such accreditation must be presented.
4. The Contractor shall be a manufacturer's authorized distributor and warrantee station for the equipment offered and shall maintain a fully equipped service organization capable of furnishing adequate repair service to the equipment. The Contractor must be certified by the manufacturer a minimum of 180 days prior to bid opening.
5. The Contractor selected for this Project must adhere to the engineering, installation and testing procedures and utilize the authorized manufacturer components and distribution channels in provisioning this Project.
6. Personnel: Use adequate numbers of skilled workers who are thoroughly trained and experienced with the specified requirements and the methods needed for proper performance of the AV systems installation work specified herein.
7. Designated Project Engineer: Provide a designated Project Engineer in responsible charge of the Design, CAD, In-House testing and on the on-site commissioning of the Project during all phases of the work of this specification. This Project Engineer shall hold a current AVIXA (InfoComm) CTS-D and (insert Manufacturer specific requirement) certifications minimum and shall be the same individual through the execution of the work unless illness, loss of personnel, or other circumstances reasonably beyond the control of the Contractor intervene.
8. Technicians: shall have at least three (3) years direct experience in similar work. The AVS technicians assigned to this project shall be fully trained, qualified and carry valid and

current industry certifications regarding the installation, operation and testing of audiovisual systems. At least one AVIXA (InfoComm) CTS-I and (insert Manufacturer specific requirement) certifications shall be assigned as Lead Technician to the project.

9. Custom Control System Programmer: Provide at least one (1) full time programmer on staff, capable of on-site custom programming of the custom remote-control system specified herein. Control System Programmer to hold the following certifications: AVIXA (InfoComm) CTS, and (insert Manufacturer specific requirement) certifications. A programming Sub-Contractor may be used as long as the Programmer has the certifications as listed above.
10. Designated Project Manager: Provide a designated Project Manager in responsible charge of the fabrication shop and on the Project Site during all phases of installation and testing of the work of this specification. The Project Manager shall hold current AVIXA (InfoComm) CTS and shall be the same individual through the execution of the work unless illness, loss of personnel, or other circumstances reasonably beyond the control of the Contractor intervene.

1.4 QUALITY ASSURANCE

A. To maintain a high degree of quality assurance, the Contractor shall, without exception, use the parts and supplies as specified on the drawings and in this specification.

B. For any proposed product substitution or when the Contractor intends to include an “or equal” product in the bid pricing, provide a substitution request submittal to the Owner’s Project Manager for review no later than fifteen (15) calendar days prior to Bid submittal. This report shall include:
   1. Description of how the proposed product(s) will impact meeting the project completion date, indicate item(s) with lead times and expected delivery date(s).
   2. Itemized cost comparisons between the proposed product(s) and the listed product(s).
   3. Detailed technical analysis of the electrical and mechanical specification differences between the proposed product(s) and the listed product(s).
   4. ETL “Verified” or UL “Verified” test lab documentation for the proposed product(s), component(s), and assemblies.
   5. Proposed product identification, manufacturer literature (specifications and cut sheets).
   6. Name, address, and contact information of several similar projects where the proposed product(s) have been used.
   7. Name, address, and contact information of the proposed product(s) manufacturer’s local representative.
   8. Sample proposed product(s) manufacturer’s warranty.

C. The Owner’s Design Team/Project Manager must approve any proposed product(s) substitution item in writing. The Owner’s Design Team/Project Manager reserves the right to require a complete sample of any proposed product(s) and may request a sample tested by an independent testing consultant to prove equality. The decision of the Owner’s Design Team/Project Manager regarding equality of proposed product(s) items will be final.

D. If a proposed product(s) is given final acceptance by the Owner’s Project Manager, the Contractor shall reimburse the Owner’s Design Team/Project Manager for the costs to review the proposed product(s) substitution(s), and for any additional engineering charges, and shall pay all charges of other trades resulting from this product(s) use, at no cost to the Owner.

E. It is a mandatory requirement that a single Contractor perform the work described in this specification.

1.5 BID SUBMITTAL REQUIREMENTS

A. Pre-Qualification Certificates: Provide current training certificates for design, engineering, installation and testing of the proposed products.

B. Manufacturer Tests: Contractor shall submit all manufacturer test information prior to installation. If equivalent product(s) are substituted, the equivalent product(s) must show demonstrated and documented equivalence to the product(s) specified.

C. Bid Forms: Contractor shall submit completed the detailed bid forms provided with this specification. Lump sum bids will not be accepted.

D. Project Narrative: Contractor shall submit a summary of the scope of work, in Contractor's own words, illustrating a complete and thorough understanding of the project. The narrative shall include, but not be limited to room by room scope of work, project staffing and duration, quality assurance procedures and methodology, problem escalation procedures, and project schedule.

E. Proposed Solution: The Contractor shall provide manufacturers cut-sheets for all the proposed materials that meet the requirements listed / described in Section 2 of this specification. On each cut sheet, provide an indicating arrow next to each part number of proposed material.

F. A resume of qualification shall be submitted with the Contractor's bid indicating the following:
   1. The Contractor shall hold a valid State of California C-7 Low-Voltage license, shall have completed at least ten (10) projects of equal scope, shall have been in business of furnishing and installing systems of this scope and magnitude for at least five (5) years, and capable of being bonded to assure the Owner's Project Manager of performance and satisfactory service during the guarantee period.
   2. The Contractor shall hold all other licenses required by the legally constituted authorities having jurisdiction over the work.
   3. A technical resume of experience for the Contractor's Project Manager who will be assigned to this project. This individual will remain as Project Manager for the duration of the project. The Contractor may change Project Managers only with the Owner's Project Manager's written approval.
   4. All personnel performing work on this project must have successfully completed the manufacturer's installation training course prior to performance of any work on this project. Accreditation will consist of individual employee certifications issued by the manufacturer. Copies of certification of such training must be presented prior to any work performed on this project. A list of technical product installation training attended by the Contractor's personnel within the past two (2) years that will install the Contractor shall be submitted with the response.

G. The Contractor shall furnish a letter from the manufacturer, which certifies that the contractor is the Authorized Distributor and that the equipment shall be installed according to manufacturer intended practices. The Contractor shall also furnish a written guarantee from the manufacturer that they will have a service representative assigned to this area for the life of the equipment.

H. The Contractor shall submit a detailed Bill of Materials developed for the project. The Bill of Materials shall contain a complete list of every component, part or device by part description, manufacturer and manufacturer's part number, quantity, and unit of measure. See example format below. Product cut sheets shall be organized to match the order listed in the bill of materials. All cut sheets shall be numbered sequentially with matching page numbers indicated on the Bill of Materials. If more than one-part number appears on a cut sheet, Contractor shall identify the proposed part with a RED arrow or RED circle.

Description	MFG & Part #	Quantity	Unit of Measure	Price
Speaker	QSC Audio	1	Each	$

I. This information may be used by the Owner to evaluate the Contractor's general understanding of the project scope during the bid evaluation. Errors/Omissions from this bill of material do not relieve the AVS contractor from providing all material, components, labor, etc., as outlined in this specification and on the drawings to provide a complete and useable AVS system.

J. Provide 3 copies of the above information at bid time.

1.6 POST AWARD SUBMITTALS: SUBMIT WITHIN THIRTY (30) DAYS OF AWARD.

A. Submittals shall be in three (3) deliverables, the first submittal shall be equipment cut sheets and equipment index in PDF format. The second submittal shall be electronic reproducible shop drawings including single line block drawings, equipment rack elevations, equipment locations, and mounting details (as pdf). The third submittal shall be control panel layouts, see below in paragraph G:
   1. A statement of sub-contractors, franchises, distributorship, dealerships, arrangements, and agreements with manufacturers of equipment to be used for this work.
   2. Complete bill of quantities, including all material, components, devices, and equipment required for this work. The bill of quantities shall be tabulated respective of each and every system as specified, in the order of the specification section 2 below, and shall contain the following information for each item listed:
      a. Quantity
      b. Description
      c. Manufacturer's name and model number
      d. Manufacturer's specification sheet

B. Samples approved by the architect, of all finishes/materials which will be visible to the public. Including at least receptacles and controls with associates trim plate and each type of loudspeaker baffle and/or grille.

C. Functional Diagrams: single-line block diagram showing interconnection of all components, receptacles, terminal blocks, controls, transformers, and loudspeakers in addition to the active elements. Include terminal and cable numbers, all system and component labels. Show detailed system component information including but not limited to manufacturer's name, model number, any specialized part number option and all input and output connection information, for each piece of equipment. No drawing codes shall be permitted. Provide one (1) full-scale original or photograph (not blueprint) copy for each system. All shop drawing shall follow The AVIXA (InfoComm) standard ANSI-J-STD-710 for audio, video, and control.

D. Equipment rack elevation drawings scaled (1-1/2" = 1'-0" or larger):
   1. Front Elevations: include equipment designation, manufacturer's name, model number, rack location and rack designation.
   2. Rear Elevations: include AC power wire-ways and route of wiring harnesses.

E. Samples for approval by the architect of all finishes/materials that will be visible to the public including at least receptacles and controls with associated trim plate and each type of loudspeaker baffle and/or grille.

F. Contractor fabricated items, detailed drawings showing all components, devices, and equipment, including dimensions, component values, terminal designations, types, locations, manufacturer's name, and model number.

G. The third submittal shall be Control Panel Layouts: Developed drawings of all control system panel layouts after meeting with the Owner to review the system functionality they are expecting.
   1. Prior to programming the remote-control system, the Contractor shall submit shop drawings per the project standards showing all control screen layouts, graphical user interfaces (GUI) and control descriptions of all remote-control system functions to the PM for review and comment prior to actual programming of the system. Submit in native file format and hard copy form. Shop drawings shall include control screen layouts of the touch panel pages for each venue, web page layouts (as required in Part 2 below). Submit electronic versions for PM review. The Contractor shall incorporate all PM comments into the programming of the systems.
   2. Prior to delivery of the systems to the job site, the Contractor shall demonstrate fully functioning systems in the Contractor's facilities that include the remote-control programming. This demonstration shall coincide with the PM's Representative observation of completed sub-assemblies. The PM will review and comment on the remote-control programming submittal, and the Contractor shall incorporate all PM comments into the programming of the systems.

1.7 GENERAL SYSTEM PRODUCT, INSTALLATION AND OVERALL SYSTEM WARRANTY

A. Prior to Owner acceptance, the Contractor shall provide to the Owner's Project Manager, a manufacturers product and performance warranty. This will require a submittal of the required pre-job certification registration forms as well as the required project closing information. The Owner will only acknowledge acceptance upon submittal of a valid manufacturer's warranty.

B. Manufacturer's Site Certifications will not be accepted.

C. The warranty shall commence from the date of the Owners final written acceptance of the completed project.

D. All conditions for obtaining the manufacturers warranty shall be the sole responsibility of the Contractor.

E. The Contractor shall maintain a competent service organization and shall, if requested, submit a service maintenance agreement to the Owner after the end of the guarantee period.

F. A typewritten notice shall be posted at the equipment rack that shall indicate the firm, address, and telephone number to call when service is necessary. The notice shall be mounted in a neatly finished metal frame with a clear plastic window and securely attached to the inside of the door.

1.8 SPECIFIC SYSTEM PRODUCT, INSTALLATION AND OVERALL SYSTEM WARRANTY

A. Prior to Owner acceptance, the Contractor shall provide to the Owner's Project Manager, a manufacturers product and performance warranty. This will require a submittal of the required pre-job certification registration forms as well as the required project closing information. The Owner will only acknowledge acceptance upon submittal of a valid manufacturer's warranty.

B. The warranty shall commence from the date of the Owners final written acceptance of the completed project.

C. All conditions for obtaining the manufacturer's warranty shall be the sole responsibility of the Contractor.

D. The Contractor shall maintain a competent service organization and shall, if requested, submit a service maintenance agreement to the Owner after the end of the guarantee period.

E. A typewritten notice shall be posted at the equipment rack that shall indicate the firm, address, and telephone number to call when service is necessary. The notice shall be mounted in a neatly finished metal frame with a clear plastic window and securely attached to the inside of the door.

PART 2 - PRODUCTS AND AUDIOVISUAL SYSTEM SCOPE OF WORK

2.1 ACCEPTABLE MANUFACTURERS

A. It is the responsibility of the bidder to ensure that the proposed product meets or exceeds every standard set forth in these specifications and the equipment's technical data sheets.

B. The functions and features specified are vital to the operation of this facility. Therefore, inclusion of a component's manufacturer in the list of acceptable manufacturers does not release the Contractor from strict compliance with the requirements of this specification.

2.2 SYSTEM FUNCTIONS AND CAPABILITIES:

A. The Audiovisual Systems (AVS) equipment will be housed in the AVS rack. The AVS shall be controlled by a control system for the system functionality.

B. The AVS shall comply with AVIXA A102.01:2017 Audio Coverage Uniformity in Listener Area.

C. The AVS shall provide clear, natural sound uniformly distributed throughout the designated areas. The system shall utilize speakers as shown on the plans. These quantities shall be considered as the minimum quantity required. If additional speakers are needed to meet the requirements of section 2.02 sections C thru G below, the Contractor shall include all costs for added speakers in the base bid.

D. The system shall have adequate dynamic range without audible clipping or distortion to accommodate all types of program material. Audio, Digital Signal Processing shall be employed in the designated rooms to insure smooth frequency response, high acoustical gain before feedback. When at maximum level, the system shall operate without audible distortion, rattles, and buzzes. All switching shall be silent and without pops and or transients.

E. The system frequency response shall be within +/- 2dB from a curve which is flat from 80Hz to 4kHz and decreasing 3dB per octave from a relative level of 0 dB from 4kHz to 10kHZ. There shall be a minimum 12dB roll-off above 10 kHz and below 63 Hz. Uniformity of coverage of the system at seated ear height (42") shall be within +/- 3dB in the 4kHz 1/3 octave band at any seat location using pink noise as a test signal.

F. System noise shall not exceed an equivalent input noise of -120dB based on a 20KHz-noise bandwidth. The predominant noise component in the system output under any operating condition shall be that of the input stage.

G. The sound level capability of program material levels produced in all seats shall be at least 105dB when measured with a scaled filter. There shall be at least 6dB of amplifier headroom.

H. The system shall provide clear audio to all areas covered by the system. Each speaker zone shall be wired discretely to the correct zone on the amplifier. See AVS drawings for exact location.

I. Contractor will review and assess the appropriate Lens Throw length between the video projectors and the projection screens to ensure optimum picture sizing and focus. Make all adjustments necessary, including projector keystone correction (if the projector cannot be placed in the optimum location) and lens shift to achieve the image size and shape required.

J. Provide full video projector calibration and adjustments for optimal picture quality for all used inputs. Provide proper aspect ratio configuration for 16:9 and 16:10 sources. Set all projector configuration presets required for control system recall coordination and provide with final system documentation.

K. Verify image Contrast to perform to AVIXA (INFOCOMM) 3M-2011, Projected Image System Contrast Ratio.

L. Provide full flat panel monitor display calibration and adjustments for optimal picture quality for a single HDMI, DisplayPort (DP) or DVI-D input. Provide proper aspect ratio configuration for 16:9 and 16:10 sources. Use a test generator (I.E. Extron VTG Series, Hall Research PGA-VHD, or Teledyne 780): for all setup verification, and verify proper image configuration with all inputs. (Contract the Owner's Technical Representative prior to final adjustment to coordinate).

M. Controls: Adjust all controls to achieve the specified performance. Provide covers for all level controls, as appropriate to prevent unauthorized gain changes. Contractor will confirm that all control system operations are properly programmed and repeatable.

N. Testing Report: Provide a letter/report documenting the results of these preliminary tests, including amplifier gain/level settings, DSP Gain & EQ filter settings, and AV equalization curves for review by the AV Design Consultant.

O. See wiring device section of this specification for wiring device plate cover labeling requirements.

P. See drawings for panel board schedule directory installation requirements.

Q. See conduit installation section of this specification for conduit labeling requirements.

R. Software Programming
1. General
a. Except when otherwise agreed in writing the client shall retain legal and beneficial ownership of all Intellectual Property, including source code, created by the Contractor, their employees, and sub-Contractors.
b. The Contractor must allow sufficient time for the programming of all software configurable audio, video, and control systems. Contractors must evaluate the systems functional requirements and user interface and then allow time in their bid accordingly. The system description as well as the end user interview will provide the Contractor with the necessary information needed to proceed with the programming. Any questions as to the systems functional requirements must be sent in written RFI form to the Owner and Consultant. All programming schemes must be submitted to the Owner and Consultant for approval before programming starts. This includes the appearance of all user interfaces, touch panel layouts, preset and sub-preset information (acquired through client interviews), and speaker control schemes. The Contractor will also submit a narrative for the control system concept to the Consultant for approval. The Contractor is to interview the Owner and their representatives to acquire the necessary information needed to allow for the proper programming of this system. The Contractor, after interviewing the Owner, will then submit a written report stating his interpretation of the Owner's requirements for approval by Consultant. Only after the Owner and Consultant have approved the programming report may the Contractor proceed with the programming of this system.
c. All equipment that is connected to the Owner's local area network and is configurable via the local area network must have its equipment software installed onto Owner furnished dedicated computers by the owners Information Technology Staff unless otherwise indicated. The Contractor is to allot time to test equipment software loaded on the Owner's computers which are to be identified by the Owner and/or Consultant. The computers will be programmed to emulate user interfaces throughout the facility. The Contractor shall coordinate all software deployment over IP with the Owner's Information technology department.
d. Control system minimum programming outlined below:
1) The Contractor shall allot time, as needed for on-site control system programming with the Owner representative.
2) All serial controlled devices must have bi-directional communication with the control system. All control functions locally available on each device must be accessible via the remote-control system. All locally gestured control functions must mirror on the control system user interface. In other words, if a volume control is adjusted on a DSP interface that adjustment must register on the control interface.
3) Control system shall be used to power up and down connected equipment where indicated. The control system shall control the volume levels for the program audio, wireless microphones if applicable, select video sources and media input panel (MIP) in the floor boxes and wall plates, transport and control functionality for playback equipment from the wall mounted 7"

control panel in the room. The control panel may require a POE injector located in the AV rack or behind the display.

2.3 AUDIOVISUAL SYSTEM PRODUCTS

A. The system shall utilize AV products as shown on the Plans and listed below. These products shall be the minimum quantity, performance, functionality, and quality levels. If additional and/or upgraded components are needed to meet the performance requirements of this specification, the Contractor shall include all costs for such added and/or upgraded components in the base bid.

B. Equipment

DEVICE ID	DESCRIPTION	MANUFACTURER	MODEL	ACCESSORIES
ALH	ASSISTIVE LISTENING HEADPHONES	LISTEN TECHNOLOGIES	LA-401	
ALR1	ASSISTIVE LISTENING RECEIVER	LISTEN TECHNOLOGIES	LP-4200-072	
ALT1	ASSISTIVE LISTENING TRANSMITTER	LISTEN TECHNOLOGIES	LT-800-072-01	
CC	CABLE CUBBY	EXTRON	CABLE CUBBY WITH CABLE PASS-THRU	
ER	EQUIPMENT RACK	MIDDLE ATLANTIC	WRK-24MDK	BLANK PLATES, LOCKING HARDWARE
LEC	LECTERN	DWI ENTERPRISES	DM100 SERIES	
LP1	LECTERN PANEL	EXTRON	HSA 400	
MIC1	MICROPHONE	COUNTRYMAN	ISOMAX IV	FSR SHOCK MOUNT
NWS1	NETWORK SWITCH	NETGEAR	M4250-9G1F-POE+	
PJS1	PROJECTION SCREEN	DRAPER	ACUMEN XL - 87 1/2"H X 140"W	TECVISION XH700X GREY, TAB TENSION 16:10 SCREEN, AS REQUIRED MOUNTING HARDWARE AND DROP
RX	RECEIVER	EXTRON	DTP R HWP 4K 331 D	
SO1	CEILING SPEAKER	SONANCE	PS-P63T	
TPC	7” TOUCHPANEL	EXTRON	TWS-770	BACK BOX AS REQUIRED
TX1	TRANSMITTER	EXTRON	DTP3 T203	
TX2	TRANSMITTER	EXTRON	DTP3 T 212 D	
VMS	VIDEO MATRIX SWITCHER	EXTRON	DTP3 CrossPoint 884 IPCP A SL LL	
VPJ1	VIDEO PROJECTOR	EPSON	POWERLITE L570U	ET-D75LE30 Lens, ALL REQUIRED MOUNTING HARDWARE
VPJ2	UST VIDEO PROJECTOR	EPSON	POWERLITE 810E	MOUNTING HARDWARE
WB	WIRELESS BELT-PACK	SHURE	ULXD1	
WLM2	WIRELESS MICROPHONE	SHURE	ULXD2	
WMA	WIRE. MIC ANT.	SHURE		

WMR	WIRELESS MIC RX	SHURE	ULXD4Q	

C. ADA-COMPLIANT ASSISTIVE LISTENING SYSTEM: A complete system shall be furnished and installed to meet the latest ADA 2010 requirements for hard-of-hearing for each system. Furnish portable receivers in as indicated in the table below. The Stationary Assistive Listening System shall be integrated into and work in conjunction with the sound reinforcement systems. Mount the necessary stationary transmitters into the equipment racks or a wall cabinet and adjust as required for total coverage of seating areas Assistive Listening Transmitters shall operate in the RF or IR frequency range.

1. *Note: As per Paragraph C ADA Table 219.3 below, provide the number of receivers, ear sets, rechargeable batteries and charging units and for a fully functional and compliant Assistive Listening System per ADA requirements.
2. ADA Table 219.3 Receivers for Assistive Listening Systems

Capacity of Seating in Assembly Area	Minimum Number of Required Receivers	Minimum Number or Required Receivers Required to be Hearing Aid Compatible
50 or less	2	2
51 to 200	2, plus 1 per 25 seats over 50 seats[1]	2
201 to 500	2, plus 1 per 25 seats over 50 seats[1]	1 per 4 receivers[1]
501 to 1000	20, plus 1 per 33 seats over 500 seats[1]	1 per 4 receivers[1]
1001 to 2000	35, plus 1 per 50 seats over 1000 seats[1]	1 per 4 receivers[1]
2001 and over	55, plus 1 per 100 seats over 2000 seats[1]	1 per 4 receivers[1]

3. Note: 1. or fraction thereof.

2.4 GENERAL PRODUCTS FOR SYSTEMS

A. CABLE – ALL SPACES

1. HDBaseT, Digital Video Twisted Pair Cable, Manufacturer & Part Number, Shielded Twisted Pair Cable, Plenum Rated: (Quantity as required). With Only Shielded RJ-45 Connectors.
2. Distributed Loudspeaker 16-2, 16 AWG, 2-conductor Plenum Rated (70 volt): Belden, or equal.
3. Analog Microphone/Line Level cable, 2-22 (22 AWG conductor, jacketed, shielded, twisted-pair) plenum rated: Belden or equal.
4. Control System Device Control (RS232, Relay or Contact Closure): (Dual 22 AWG shielded twisted pairs with individual drain wires; each pair is color-coded Red/Black and Green/White to simplify identification.) Plenum Rated: Belden or equal.

B. Infrared Emitter and cable, Xantech or equal.

PART 3 - EXECUTION

3.1 GENERAL INSTALLATION REQUIREMENTS

A. The installation, configuration, and wiring of the system shall be executed in accordance with the drawings and the equipment manufacturer's wiring diagrams. Should any variations in these

requirements occur, the Contractor shall notify the Owner's Project Manager before making any changes. It shall be the responsibility of the manufacturer-authorized distributor of the approved equipment to install the equipment and guarantee the system to operate as per plans and specifications.

B. Furnish all conductors, equipment plugs, terminal strips, etc., and labor to install a complete and operable system.

C. The cables within the rack or cabinets shall be labeled/numbered for identification following the AVIXA (InfoComm) F501.01:2015, Cable Labeling of Audiovisual Systems, standard unless otherwise directed.

D. Splices of cables in underground pull boxes are not permitted unless otherwise noted on the drawings.

E. The labor employed by the Contractor shall be regularly employed in the installation and repair of audiovisual systems and shall be acceptable to the Owner's Project Manager to engage in the installation and service of this system.

F. The Contractor shall thoroughly clean all equipment and materials. All exposed parts of the equipment, cabinets, and other equipment shall be left in a clean condition, unblemished and free of all dirt, dust, smudges, spots, fingerprints, etc. The Contractor shall remove all debris and rubbish created in the course of this project. The Contractor shall thoroughly clean all buildings of any dirt, debris, rubbish, marks, etc., caused by the performance of this work.

G. The system must meet all local and other prevailing codes.

H. All cabling installations shall be performed by qualified technicians.

I. All cabling shall be splice free unless otherwise noted on drawings.

J. In order to ensure the least amount of cable untwisting, it is required that all cables shall be stripped using a special tool.

K. The use of lubricants (i.e. Yellow 77) to facilitate the installation of cables in conduits is highly discouraged. If such a lubricant must be used, the AVS Contractor shall verify the acceptability of the lubricant to be used with the cable manufacturer, prior to using such a lubricant. Lubricants that harden after installation are not allowed.

L. Under no circumstance are "channel locks" or other pliers to be used.

M. Cables may be run exposed above ceilings, provided the cabling is supported independent of other utilities such as conduits, pipes, and the ceiling support systems. The Contractor shall include all costs in base bid for any additional supports/seismic bracing required by the Local Authority having Jurisdiction. The cables shall not be laid directly on the ceiling panels. The use of hook and loop ties shall be done in accordance with the cable manufacturer's requirements. The cable jacket composition must meet local and all other prevailing fire and safety codes – "Plenum Rated" cable shall be used.

N. All fire rated walls penetrated by Contractor shall be sealed by use of a non-permanent fire blanket or other method in compliance with the current edition of NFPA and the NEC or other prevailing code and must be a system listed by UL. The Contractor must not use concrete or other non-removable substance for fire stopping on cable trays, wire ways or conduits. Contractors who use this method will be required to replace all cables affected and provide the original specified access to each effected area. This requirement also applies to maintaining fire ratings of all floors penetrated by conduits or devices designated for use by voice and data cabling.

O. All equipment racks shall be bolted to the floor by the Contractor in the location shown on drawings. The earthquake mounting brackets that come with each rack kit shall be screwed to studs, not drywall.

P. Any cable damaged or exceeding recommended installation parameters during installation shall be replaced by the Contractor before final acceptance at no cost to the Owner.

Q. The cable's minimum bend radius and maximum pulling tension shall not be exceeded.

R. Cable raceways, when required, shall not be filled greater than 40% of cross sectional area.

3.2 SPECIFIC SYSTEM INSTALLATION REQUIREMENTS

A. All Audiovisual cabling used throughout this project shall comply with the requirements as outlined in the NEC Articles 725, 760, 770, and 800 and the appropriate local codes. All copper cabling shall bear UL listed type CMP (Plenum Rated). All fiber optic cabling shall bear OFNP (Plenum Rated). Contractor is responsible for installing appropriately rated cable for the environment in which it is installed. For cables run outside of a building to outdoor speakers, the cable shall be Outdoor Plant Rated (OPR) or Direct Burial cable and must be run in conduit point to point. For longer cable runs between buildings fiber optic cable shall be used, the fiber cable shall be run in conduits.

B. Cable Pathways:
   1. In suspended ceiling and raised floor areas where duct, cable trays or conduit are not available, the Contractor shall bundle cabling with half inch hook and loop strips, but not deforming the cable geometry. Cable bundles shall be supported via "J" hooks attached to the existing building structure and framework at a maximum of five (5) foot intervals. Plenum rated hook and loop ties will be used in all appropriate areas. The Contractor shall adhere to the manufacturers' requirements for bending radius and pulling tension of all cables.
   2. Cables or J hooks shall not be attached to lift out ceiling grid supports or laid directly on the ceiling grid.
   3. Cables or J hooks shall not be attached to or supported by fire sprinkler heads or delivery systems or any environmental sensor located in the ceiling air space.
   4. Where additional conduit(s)/sleeve(s) are required, but not provided by the electrical contractor, the Contractor shall be responsible to provide such conduit(s)/sleeve(s). Conduit(s) and sleeve(s) shall be of suitable material, sized, installed, fire-stopped, and grounded as required by the NEC, ANSI/TIA/EIA standards and all other applicable codes and standards. Any conduit(s) and sleeve(s) added by the Contractor shall be approved by the Owner's Project Manager prior to rough-in.

C. The Contractor shall be responsible for damage to any surfaces or work disrupted as a result of his work. Repair of surfaces, including painting, shall be included, as necessary.

D. Rack mounted equipment shall be grounded via the chassis, in accordance with manufacturer's instructions. The equipment chassis shall be bonded to the rack/cabinet using one of the following methods:
   1. If the equipment has a separate grounding hole or stud, use a # 6 AWG ground wire from the chassis ground hole/stud to the rack grounding bus if required.
   2. If the manufacturer suggests grounding via the chassis mounting flanges, use tri-lobular thread-forming screws (not self-tapping or sheet metal screws) to attach the equipment to the rack/cabinet rails. If the equipment mounting flanges are painted, remove the paint and apply an anti-oxidant, or use tri-lobular thread-forming screws and two (2) "Type B" internal-external tooth lock washers to safely ground equipment to the rack.
   3. All equipment racks shall be grounded to the AC outlet box or building ground by a # 6 AWG Green ground wire attached to the Grounding lug in the rack.

3.3 GENERAL INSTALLATION DESCRIPTION

A. The labor employed by the Contractor shall be regularly employed in the installation and repair of Audiovisual Systems and shall be acceptable to the owner and architect to engage in the installation and service of this system.

B. The Contractor shall thoroughly clean all equipment and materials. All exposed parts of the equipment, cabinets, and other equipment shall be left in a clean condition, unblemished and free of all dirt, dust, smudges, spots, fingerprints, etc., The Contractor shall remove all debris and rubbish occasioned by the work from the site. The Contractor shall thoroughly clean all buildings of any dirt, debris, rubbish, marks, etc., Caused by the performance of this work.

C. Labeling
   1. Wiring Labels: At all connection points for all types of cable & wiring, a label strip shall be attached at both ends of the cable following the AVIXA (InfoComm) F501.01:2015 Cable Labeling of Audiovisual Systems, standard unless otherwise directed, indicating the name/number of that cable or wire as follows:
      a. At internal locations (inside racks, cabinets, or boxes), a pressure sensitive label shall be used.
      b. At external locations, a printed label covered with clear shrink wrap or approved labeling system shall be used.
   2. Equipment Labels: All active components shall have labels at the front and rear.
      a. Labels shall be applied plumb and neat and shall not cover any equipment lights, recessed controls, or control labels.
      b. Front labels shall indicate functional use of equipment.
      c. Rear labels shall indicate system schematic reference designation.
   3. Contractor Label: Contractor name plate shall be attached to a blank panel inside each equipment rack or group of racks.
      a. Name plate shall be printed, self-adhesive type and shall be no larger than 1-3/4" high by 6" wide. Alternatively, name plate may be preprinted onto a 1RU blank panel.
      b. Name plate shall contain Contractor's name, city/state address and phone number.

D. Equipment Rack and Equipment Testing and Adjusting Procedures: Conduct procedures in fabrication shop following the AVIXA (InfoComm) 10:2013 Audiovisual Systems Performance Verification procedure. Verify safe and proper operation of all components, devices, or equipment, establish nominal signal levels within the systems and verify the absence of extraneous or degrading signals. Make all preliminary adjustments and document the setting of all controls, parameters of all corrective networks, voltages at key system interconnection points, gains, and losses, as applicable. Submit test report with color photographs of each equipment rack, front and back. Perform at least the following procedures:
   1. Preliminary: Verify:
      a. Grounding of devices and equipment. Integrity of signal and electrical system ground connections.
      b. Proper provision of power to devices and equipment.
      c. Integrity of all insulation, shield terminations and connections.
      d. Integrity of soldered connections. Absence of solder splatter, solder bridges.
      e. Absence of debris of any kind, tools, etc.
      f. Routing and dressing of wire and cable.
      g. All wiring, including polarity and continuity, including conformance with wire designations on running sheets, field, and shop drawings.
      h. Mechanical integrity of all support provisions.
      i. All wiring in racks on horizontal lacing bars and vertical cable paths shall have Velcro cable wraps, no Zip Ties shall be allowed. If Zip Ties are used, they shall be replaced at the Contractor's expense.
   2. Rig temporary power and grounding: Comply with all applicable Codes, regulations, and ordinances.
   3. Determine the proper sequence of energizing systems to minimize the risk of damage. Energize. Burn in for at least 48 hours
   4. All equipment racks shall be bolted to the floor by the Contractor (unless noted) once the Owner determines the exact location for each rack. The earthquake mounting brackets that come with each rack kit shall be screwed to studs, not drywall. All equipment shall be serviceable in the racks final location – the need to unbolt racking equipment to access or service equipment is not acceptable.

3.4 PROJECT DIRECTION

A. Single Point of Contact: Contractor will provide a single point of contact, i.e., Project Manager, to speak for the Contractor and to provide the following functions:
   1. Initiate and coordinate tasks with Owner's Project Manager, and others as specified by Owner's Project Manager.
   2. Provide day-to-day direction and on-site supervision of Contractor personnel.
   3. Ensure conformance with all Contract provisions.
   4. Participate in weekly site project meetings.
   5. This individual will remain as Project Manager for the duration of the project. The Contractor may change Project Managers only with the Owner's Project Manager's written approval.

3.5 PLANNING, ENGINEERING AND SUBMITTALS

A. Planning meetings and schedule: Within thirty (30) calendar days after the date of award of the Contract, an initial planning meeting will be held with the successful bidder to clarify all requirements (systems, services, distribution methods, etc.), identify responsibilities, and schedule the events that will transpire during the implementation of the project. Within one (1) week of this initial meeting, the contractor shall provide a written report and project schedule to clearly document the events and responsibilities associated with the project.

B. Within Thirty (30) calendar days after the date of award of the Contract, the Contractor shall submit three copies of the complete submission to the Owner's Project Manager for review. The submission shall consist of four major sections with each section separated with index tabs. Each page in the submission shall be numbered chronologically and shall be summarized in the index.
   1. The first section shall be the "index" which shall include the project title and address, name of the firm submitting the bid and name of the Owner.
   2. The second section shall contain the comparative specification listing, including a complete listing of the characteristics of the equipment to be furnished next to all of the specified equipment's features and functions as stated in the specifications and data sheets.
   3. The third section shall contain an original manufacturer data sheet for every component listed in the drawings or specifications.
   4. The fourth section shall contain a designation schedule for each system component location and complete "E" size (30" x 42"), unless otherwise specified, bond drawings, showing system wiring plans. The drawings shall be professionally drafted, generated on AutoDesk AutoCAD 2010 computer design software. These drawings shall also include:

C. As-Built/Closeout Documentation: Within fifteen (15) days after the completion of work (signed off by Owner), the Contractor shall provide a complete Contractor-provided set of professionally drafted "E" size (30" x 42"), unless otherwise noted, reproducible bond as-built drawings, generated on AutoDesk AutoCAD 2014 computer design software. Contractor will supply to Owner one set of CDs containing all as-builts.

D. As-Built Documentation Display in each equipment rack location: Within fifteen (15) days after the completion of work, the Contractor shall install a complete Contractor-provided, professionally drafted as-built floor plan in color in each equipment rack room mounting frame. Each floor plan, generated on AutoDesk AutoCAD 2014 computer design software and printed in black and white, shall depict all audiovisual jack locations in each room with an audiovisual system and all other areas. The Contractor will provide to Owner one set of CDs containing all as-built.

E. Controls: Adjust all controls to achieve the specified performance. Provide security covers for all level controls, as appropriate to prevent unauthorized gain changes. Contractor will confirm that all control system operations are properly programmed and repeatable.

F. Testing Report: Provide a letter/report documenting the results of these preliminary tests, including amplifier gain/level settings, crossover filter settings, and AV equalization curves for review by the Owner and the AV Design Consultant.

G. Qualification for Acceptance: After completing preliminary testing, the Contractor shall furnish the Construction Manager with the letter/report documenting the results of the preliminary tests and five (5) copies of "as-built" wiring diagrams of the entire system including the connection

numbers, and their locations. The receipt of this documentation will constitute the Contractor's acknowledgment that the installation is complete and conforms to this specification and is ready to be reviewed and tested by the Owner and the AV Design Consultant.

H. Acceptance Test: The Consultant, Owner's Representative and/or Construction Manager will be present during the acceptance testing and require the assistance and cooperation of the Contractor. Provide personnel who participated in the actual installation and preliminary testing and adjustment of the audiovisual systems.
   1. Equipment cabinet keys and any tamper-proof fastener tools must be available to the Owner and the AV Design Consultant. Delays associated with failure to access the equipment will be back-charged to the Contractor at the AV Design Consultant's current hourly rates.
   2. Each major component shall be demonstrated to function, as specified.
   3. Measurements: Further electrical and acoustical measurements may be performed at the discretion of the Owner and/or Owner’s Representatives. Acoustical test equipment will be supplied by the Contractor. Such measurements may include sound pressure levels, uniformity of coverage, distortion, or other pertinent characteristics.
   4. The Contractor shall provide a laptop with all manufacturer supplied configuration software necessary for communicating with DSP Audio Matrix Mixers. A review of system settings may be required for either of the programmable units at the Owner and the AV Design Consultant’s request, and settings may be adjusted if necessary.

I. Such tests may be performed on any piece of equipment or system. If any test shows the equipment or system is defective or does not comply with the specifications, the Contractor shall perform any remedies at his expense and pay the subsequent expenses of any retesting required.

J. Delays: If the acceptance of the system is delayed because it does not meet the specification requirements, the Contractor shall reimburse the Owner for all expenses of consultants retained to represent the Owner during the final acceptance testing. This will include costs associated with travel to the site and include reimbursable business travel expenses.

3.6 INSTALLATION

A. All installation shall be done in conformance with ANSI/TIA/EIA and AVIXA (InfoComm) standards and manufacturers installation guidelines. The Contractor shall ensure that the maximum pulling tensions of the specified distribution cables are not exceeded and cable bends maintain the proper radius during the placement of the facilities. Failure to follow the appropriate guidelines will require the Contractor to provide, in a timely fashion, any additional material and labor necessary to properly rectify the situation to the satisfaction and written approval of the Owner’s Project Manager. This shall also apply to any and all damages sustained to the cables by the Contractor during the implementation.
   1. Bonding and Grounding: The Contractor shall be responsible for providing an approved ground at all racks. The Contractor shall also be responsible for ensuring ground continuity by properly bonding all appropriate cabling, closures, cabinets, service boxes, and racks. All grounds shall consist of #6 AWG copper wire and shall be supplied from an approved building ground and bonded to the main electrical ground. Grounding must be in accordance with the NEC, NFPA, ANSI-J-STD-607-A and all local codes and practices.
   2. Power Separation: The Contractor shall not place any low voltage and speaker cabling alongside power lines, or share the same conduit, channel or sleeve within racks.

3. Miscellaneous Equipment: The Contractor shall provide any necessary screws, anchors, clamps, hook & loop ties, distribution rings, wire molding, miscellaneous grounding, and support hardware, etc., necessary to facilitate the installation of the System.
4. Special Equipment and Tools: It shall be the responsibility of the Contractor to furnish any special installation equipment or tools necessary to properly complete the System. This may include, but is not limited to, tools for terminating cables, testing, and splicing equipment for copper/fiber cables, communication devices, jack stands for cable reels, or cable winches.
5. Labeling: The Contractor shall be responsible for printed labels for all cables and cords, distribution frames, and outlet locations, according to the specifications. No labels are to be written by hand. The labeling shall follow the AVIXA (InfoComm) F51.01:2015 standard unless otherwise directed.

3.7 DAMAGES

A. The Contractor will be held responsible for any and all damages to portions of the building caused by it, its employees or subcontractors; including but not limited to:
   1. Damage to any portion of the building caused by the movement of tools, materials, or equipment.
   2. Damage to any component of the construction of spaces.
   3. Damage to the electrical distribution system.
   4. Damage to the electrical, mechanical and/or life safety or other systems caused by inappropriate operation or connections made by the Contractor or other actions of Contractor.
   5. Damage to the materials, tools and / or equipment of the Owner, its consultants, agents, and leases tenants.

3.8 PENETRATIONS OF WALLS FLOORS AND CEILINGS

A. Unless specifically shown on the drawings, the Contractor shall make no penetration of floors, walls, or ceiling without the prior written approval of the Owner’s Project Manager.

B. Any penetrations through acoustical walls or other walls for cable pathways shall be sleeved by the Contractor. Sleeves shall consist of metallic conduit deburred and grommetted on both ends, with flanges or other means to prevent the sleeve from slipping or falling out of the partition. Sleeves shall extend a minimum of 6” on both sides of the partition. Outside perimeter of sleeves shall be sealed against sound, air, heat, or as required by partition design. Inside of sleeve shall be sealed similarly after installation of all cabling. Cables shall be independently supported on either side of the sleeve. Sleeves shall not be used as cable supports. Additional requirements in compliance with applicable code shall apply.

C. Any penetrations through fire-rated walls for cable pathways/cables shall be sealed by the Contractor as required by code and as directed by Owner's Project Manager. The Contractor shall be required to work together with the General Contractor and the Electrical Contractor to coordinate and develop all fire stopping methods prior to any cable installation. The Contractor shall also, prior to the commencement of on-site activities, submit to Owner’s Project Manager, details of any special systems to be used.

3.9 TESTING/WARRANTY

A. The Contractor shall provide competent, factory-trained engineers and/or technicians, authorized by the manufacturer of the AVS, to technically supervise and participate during all tests for the systems. All performance testing shall follow the AVIXA (InfoComm) 10:2013 Audiovisual Systems Performance Verification procedure.

3.10 COMPLETION OF WORK

A. At the completion of the System, the Contractor shall restore to its former condition, all aspects of the project site and on a daily basis, shall remove all waste and excess materials, rubbish debris, tools and equipment resulting from or used in the services provided under this Contract All clean up, restoration, and removal noted above shall be by the Contractor and at no cost to Owner. If the Contractor fails in its duties under this paragraph, Owner may upon notice to the Contractor perform the necessary clean up and deduct the costs thereof from any amounts due or to become due to the Contractor. It shall be the Contractor's responsibility to remove trash from the areas it is working in and bring trash and debris to the Contractor provided dumpster.

3.11 INSPECTION

A. On-going inspections shall be performed during construction by the Owner’s Project Manager. All work shall be performed in a quality manner and the overall appearance shall be clean, neat, and orderly.

3.12 MISCELLANEOUS PROJECT REQUIREMENTS SYSTEM DOCUMENTATION, TRAINING, AND FIELD SUPPORT

A. Operation and Maintenance Manuals: As part of the “Close Out” documents, for each system, provide five (5) copies of system manuals per system. Manuals shall be in adequately sized three-ring binders, clearly labeled on spine. Manuals shall contain the following:
   1. Service Reference Cover Sheet: Provide a cover sheet with Audiovisual AVS Contractor name, address, Email, WEB Address, telephone, and Fax numbers.
   2. System Operation Instructions: Step-by-step operating instructions based on the control system touch panel (if applicable) for the basic day-to-day use of the system including power activation, connection of source devices, adjustment of volume levels, selection of sources, etc. Include illustrations and references to individual equipment manuals, as necessary.
   3. Equipment Manuals: Include copies of individual equipment operation manuals separated by tabbed dividers. Order the manuals in nominal signal path order (i.e. sources first, amplifiers/loudspeakers last), followed by control system manuals, followed by miscellaneous manuals.
   4. Equipment List: List all system equipment including, connectors and specialty hardware, by manufacturer and model and serial number.
      a. As-built Drawings: Provide reduced 11”x17” foldout "as built" functional diagrams in clear plastic binder sleeves. Fold and insert drawings so that drawing title is clearly visible at the front of the sleeve. Five (5) half or full-size drawing sets are also to be provided for clearer system reference.

b. Provide software programmable device configuration files to the Owner for all control system interfaces and computer-based files, and the DSP Audio Matrix Mixer. Store files on site in the system documentation binders in disk sleeves. Provide the files on CD-ROM.

B. Training: Provide as needed system training to operator(s) designated by the Owner. Training time is to be non-contiguous, in multiple separate sessions. Training sessions are to be videotaped upon Owner request.

3.13 MISCELLANEOUS SUPPORT REQUIREMENTS

A. Upon approval of shop drawings and equipment submittals, Contractor shall immediately place orders for all required materials, components, and supplies especially long lead items. In addition, Contractor shall secure and forward written confirmations (including orders and shipping dates) direct from each manufacturer/vendor to the Owner's Project Manager.

B. Contractor shall expedite shipment of all materials, components, and supplies, as necessary to ensure the successful completion of the Project by the date required. All costs for expediting shall be included within Contractor's pricing as provided below.

C. The system/network cost herein shall include administration/maintenance training for at least ten Owner's representatives with a minimum allotment of sixteen hours. All training shall include written and/or video materials that shall remain the property of Owner. If materials are written, they shall be provided in quantities sufficient for each person trained; if materials are video, one copy of each will be required. The administration/maintenance training shall include, but not be limited to, the following:
   1. Review of as-built documentation, including a site demonstration.
   2. All warranty information.

3.14 AV SYSTEM AND/OR NETWORK TESTING

A. Upon completion of installation, Contractor shall execute all of the required tests as summarized in this specification. When all such tests have been completed to Owner's satisfaction and Manufacturer's specifications, Contractor shall give the Owner written notice thereof.

B. Contractor must assume responsibility of assuring that the AV system and/or network installed operates properly, including any required coordination with other suppliers.

3.15 FINAL ACCEPTANCE

A. The Owner or Owner's representative may visit the site during the installation of the system to ensure that correct installation practices are being followed.

B. The Owner or Owner's representative will conduct a final job review once the Contractor has finished the job. This review will take place within one week after the Contractor notifies the owner.

C. Two copies of all certification data and drawings for all identifications shall be provided to the Owner before the owner's review.

D. The Owner or Owner's representative will review the installation and certification data prior to the system acceptance.

E. The Owner or Owner's representative may test some of the systems features to ensure that the certification data is correct. If a substantial discrepancy is found, the Owner reserves the right to have an independent consultant perform a certification of the entire system. If such a procedure is undertaken, the cost of the testing will be billed back to the Contractor.

F. In the event that repairs, or adjustments are necessary, the AVS Contractor shall make these repairs at his own expense. All repairs shall be completed within 5 days from the time they are discovered.

G. The Contractor shall hand to the owner a copy of any applicable installation specific software configurations in CD format.

END OF SECTION 274116

SECTION 280500 - COMMON WORK RESULTS FOR ELECTRONIC SAFETY AND SECURITY

PART 1 - GENERAL

1.1 RELATED DOCUMENTS

A. Drawings and general provisions of the Contract, including General and Supplementary Conditions and other Division 1 Specifications, apply to this Section.

1.2 SUMMARY

A. Part 1 Includes:
1. Related Documents
2. Summary and related sections
3. References
4. Definitions
5. System Description and General Responsibilities
6. Coordination
7. Quality Assurance
8. Submittals
9. Delivery, Storage, and Handling
10. Site Conditions
11. Sequencing and Scheduling
12. Warranty
13. Extra Materials

B. Part 2 Includes:
1. Product Options and Substitutions
2. Materials and Equipment
3. Equipment Modification
4. Fabrication
5. Source Quality Control
6. Firestopping/Sealant Materials

C. Part 3 Includes:
1. Examination
2. Installation
3. Field Quality Control
4. Cleaning
5. Training

D. Related Sections:
1. 28 13 00 Physical Access Control System
2. 28 16 00 Intrusion Detection System
3. 28 23 00 Video Surveillance System
4. 28 26 00 Duress Alarm System
5. 28 31 00 Fire alarm Systems

1.3 REFERENCES

A. Codes compliance - Comply with the established project edition of the following codes as applicable:
   1. National Fire Alarm Codes (NFPA 72) NFAC
   2. All Local, State, County or Federal codes and ordinances

B. Standards Compliance - Comply with the following standards as applicable:
   1. American National Standards Institute ANSI
   2. American Society for Testing and Materials ASTM
   3. Electronics Industry Association EIA
   4. Electrical Testing Laboratories ETL
   5. Federal Communications Commission FCC
   6. Institute of Elect. and Electronics Engineers IEEE
   7. National Electrical Contractors Association NECA
   8. National Electrical Manufacturers Association NEMA
   9. National Fire Protection Association NFPA
   10. Occupational Safety Health Act OSHA
   11. Underwriter's Laboratories UL

1.4 DEFINITIONS

A. By Others or By Other Trades: By persons or parties other than the Division 28 Contractor. In this context the words “by others or by other trades” shall not be interpreted to mean “not in contract (NIC)”.

B. Certified: Equipment has been tested and found by a nationally recognized testing laboratory to meet nationally recognized standards and found to be safe for use in a specified manner; production is periodically inspected by a nationally recognized testing laboratory; and it bears a label, tag, or other record of certification.

C. Concealed: Not visible or readily accessible such as, embedded in masonry or other construction installed behind wall furring with double partitions or above hung ceilings, in crawl spaces, in shafts.

D. Conveniently Accessible: Capable of being serviced without climbing or crawling under or over obstacles, and with adequate working clearance both front and back.

E. Damage: Visible or invisible abuse that negatively affects performance or appearance and creates defective materials or workmanship.

F. Defective Materials or Workmanship: Operational failures, performance below minimum requirements, evidence that the system will not be reasonably maintainable, errors in documentation, abnormal operations, unsafe conditions, or similar unsatisfactory performance.

G. Contractor: Company holding the contract or agreement with the Owner or its representative. The Contractor may, when permitted, sub-contract Work described in this Section to which the term contractor may apply.

H. Exposed: Not concealed.

I. Failure: Any deviation from intended system operation and performance, as determined by the Contract Documents and subsequent submittals and the Owner's Representative.

J. Furnish: Purchase and deliver to the Project site complete with every necessary appurtenance, support, and accessory required for operation.

K. Install: Unload at the delivery point at the site and perform every operation necessary to establish secure mounting and correct operation at the proper location in the Project.

L. Labeled: Equipment embodies a valid label, symbol, or other identifying maker of a nationally recognized testing laboratory such as Underwriters' Laboratories, Inc., the laboratory makes periodic inspections of the production of such equipment, and the labeling indicates compliance with nationally recognized standards or tests to determine safe use in a specified manner.

M. Listed: Equipment is mentioned in a list which is published by a nationally recognized laboratory which makes periodic inspection of the production of such equipment or states that such equipment meets nationally recognized standards or has been tested and found safe for use in a specified manner.

N. Nationally Recognized Testing Laboratory: A testing laboratory, which is approved, in accordance with OSHA regulations, by the Secretary of Labor.

O. Provide: Furnish and install, completely ready for use, including all accessories required for operation.

1.5 SYSTEM DESCRIPTION AND GENERAL RESPONSIBILITIES

A. The work to be performed under this contract includes the furnishing of all labor, materials, and equipment for a video surveillance system, a physical access control system, a duress / panic system, and an audio announcement system. Work shall include all provisions of new electronics controls systems, including, physical access control, duress alarm, video surveillance, and audio. Portion of the work are to be bid as an optional add alternate, and the Owner may or may not choose to execute this work under the contract.

B. Combined Prescriptive and Performance Design Requirements
   1. Division 28 includes a combination of prescriptive and performance specifications. Compliance with the performance specifications, as well as coordination and integration of the prescription requirements, will require substantial design work on the part of the Contractor.
   2. The performance requirements are intended to establish overall system performance requirements, satisfy the operational requirements, and establish the inter-coordination requirements for the Division 28 systems.
   3. The prescriptive requirements establish the minimum quality, characteristics, and types of components, equipment, and materials to be used to achieve the stated system performance requirements. The Contractor is advised, however, that prescriptive specifications have not been provided to satisfy all of the specified performance requirements.
   4. The Contractor shall carefully consider all of the requirements for each of the Division 28 systems when preparing its bid. Any questions regarding the intent of these requirements, the scope of the systems or their coordination requirements must be submitted in writing prior

to bidding in accordance with the Instructions to Bidders. The Contractor shall have no claim for either extra compensation or extra time on the grounds that it did not understand the scope or the requirements of the Division 28 work, and/or the coordination requirements of the Division 28 work with the work of the other Divisions.

5. Compliance with the project requirements will be progressively monitored and adjusted through the submittal process, installation period, and performance verification testing.

C. Drawing Interpretation

1. The Drawings are diagrammatic and indicate the general arrangement of systems and equipment unless indicated otherwise by dimensions or detail drawings. The Drawings installation and schematic diagrams and symbols to outline the Work to be provided. These drawings do not have any dimensional significance, nor do they delineate every item required for the intended Work. No interpretation shall be made from the limitations of symbols and diagrams that any elements necessary for complete Work are excluded.
2. The Work shall be provided in accordance with the intent expressed on the Drawings and Specifications, and in conformance with the actual building architectural and structural conditions. When in conflict, field conditions take precedence over the Contract Documents.
3. The meaning of abbreviations shall be the same whether in lower case letters or without periods.
4. The use of words in the singular shall not be considered as singular where other indications denote that more than one item is referred to.
5. Details that appear on the Contract Documents which are specific with regard to the dimensioning and positioning of the Work, are intended only for the purpose of establishing general feasibility. They do not replace engineering or field coordination by the contractor for the Work.

D. Provide all parts and equipment for a complete and operational system for the Work of Division 28 as described herein and shown on the drawings.

E. Furnish and install all trenching and backfill, duct banks, conduits, raceways, sleeves, boxes, gutters, shelves, enclosures, shelf and enclosure supports, backboards, pull ropes (in unused or spare conduits) required to make all systems fully operational, including components not shown on the Drawings, but necessary for fully operational systems.

F. Furnish, install, terminate, test, dress, and identify all wire and cable required to make systems fully operational, including all wire and cabling not shown on the Drawings, but necessary for fully operational systems.

G. Recognize that the Work entails integration between individual systems, as well as the design and implementation of many system and component interfaces. Take full responsibility for the complete design, installation, and performance of the total integrated system, including integration between systems and various interfaces, to achieve the specified operational features and system performance requirements.

H. Fully test the systems, demonstrate their satisfactory operation, and train maintenance and operating personnel, as specified in this Section and the Sections governed by this Section.

1.6 COORDINATION

A. Coordinate with the Owner and all other trades as required to ensure that the entire Work of this Project will be carried out in an orderly, complete, and coordinated fashion.

B. Coordinate installation of lighting and ventilation in all equipment rooms and control stations to avoid any possible interference and to enhance system function.

C. Coordinate with the Work of all applicable Divisions and Drawings for the required electrical and mechanical control interfaces to the work of this section.

D. If applicable, provide coordination drawings of security device plate mounting templates and internal frame conduits to the hollow metal frame manufacturer/supplier to facilitate frame preparation for electronic devices. Rework all frames for which device mounting has not been coordinated at Contractor's expenses.

E. If applicable, obtain product data and wiring schematic information from the Division 8 and 11 Contractors/manufacturers for all approved locking and door monitoring hardware. Coordinate with the Contractors to properly wire, terminate and test all electrically controlled and monitored door/gate hardware.

1.7 QUALITY ASSURANCE

A. Division 28 requires contractors with similar work experience and specific licenses and certifications to perform the work of this section. Contractors must be certified or licensed at the time of bid where Manufacture certification or licensure is required. Required licenses and certifications shall be submitted the contractor's bid package.

B. The Division 28 contractor shall have had experience in the design and installation of similar systems of similar project sizes and similar integration as this project to be considered qualified.

C. The Contractor shall be responsible for all costs incurred including costs incurred by the Owner and its representatives for failure to provide the experience and key personnel as specified.
   1. Deductive change orders may be issued as a result of the failure to properly engineer the work prior to construction or improperly installed work that results in costs incurred to the Owner. Examples of incurred costs are rejection of submittals for failure to follow specifications or failure to properly engineer the work; re-inspection of rejected work.

D. The Division 28 contractor shall maintain a local service center with qualified service technicians for the duration of the Warranty.

E. The Division 28 Contractor shall have an active C-7 or C-10 contractor's license, as required by the project scope, issued by the State of California.

F. Key Project Personnel must have work experience with projects of similar size and complexity. Systems experience shall be demonstrated for the Key Project Personnel. Résumés of prospective key personal shall be submitted within 30 days of contract award.
   1. Project Manager Qualifications
      a. Five years' experience with projects of similar size and complexity.

2. The approved Project Manager shall represent the Contractor at all times in all project matters and shall be responsible for the administrative work including but not limited to, the following:
   a. Representation at all project meetings.
   b. Progress schedule and progress reporting.
   c. Payment schedule of values and pay requests.
   d. Representation and management of all employees and sub-contractors.
   e. Conduction of on-site performance and acceptance testing.
3. The approved Project Engineer shall be qualified and shall be responsible for technical work including but not limited to, the following:
   a. Preparation and signature of all engineering, shop drawings, and product data submittals.
   b. System fabrication, field installation work, and testing.
4. Consider all qualification and experience materials submitted as binding. Obtain the Owner's approval in writing prior to any deviations from the minimum requirements in organization, personnel, work plan, quality control plan, procurement plan or other declaration within the qualification submittal. Key project personnel substituted prior to or during the Work must meet the specification requirements and obtain the Owner's approval.

G. Regulatory Requirements and Standards:
   1. Obtain and pay for all permits and inspections required by all legal authorities and agencies having jurisdiction for the Work. The certificates of all such permits and inspections shall be delivered to the Owner.

1.8 SUBMITTALS

A. Submit under provisions of Division 1, Submittals.

B. Contractor is advised that approval or acceptance of product data or shop drawing submittals does not release the contractor from providing all necessary documentation per submittal requirements, nor does it obviate contractor from additional design and coordination throughout the project.

C. Work Plan
   1. Submit a work plan for all work to be performed in the existing facility within 15 days of the Notice to Proceed.

D. CPM Schedule
   1. Submit a Critical Path Method Schedule within 30 days of the Notice to Proceed.
   2. At a minimum show tasks by area such as by building, by floor or other appropriate designations.
   3. Include tasks that are not part of the work of this section but that may affect this section such as work by other trades or contractors or Owner review time.
   4. Include tasks that are not part of the work of this section but that may affect this section such as work by other trades or contractors or Owner review time.

E. Submittal Matrix
   1. Prepare a matrix of submittals by type vs. section of all submittals to be made by the Division 28 contractor within 30 days of the Notice to Proceed.

2. Utilize the list of required submittals listed at the end of this section as a starting point. Add columns for expected delivery dates and each specification section. If a listed submittal is not required for a specific section, indicate such with an "N/A" or other means in the column and row cross point.

F. Schedule of Values
1. Submit a Schedule of Values (SOV) based on the CPM schedule and Submittal Matrix that reflect the value of the systems and installation of work for this Division.
2. That approved SOV will be used as a basis for progress payments.

G. Product Data:
1. Product data is required for all materials and equipment. Include complete bill of materials for each section with the product data submittal.
2. Cross-reference submitted items to the Specifications using their related sections and paragraph numbers.
3. Submit complete product data for all system components in a single, bound submittal of one or more volumes. Provide a table of contents and labeled divider tabs for each section. Partial submittals for individual sections will be returned without review.
4. Include descriptive literature, catalog cuts, illustrations, schematics, technical data sheets, and test data necessary for the Owner's Representative to ascertain that proposed equipment and materials comply with specification requirements. Include manufacturer's name, model, catalog or part numbers. Catalog cuts shall be legible and shall clearly identify equipment being submitted.
5. Include required calculations, I/O points lists, system zone schedules, and other tabular data as necessary to clarify system sizing and configuration. Do not, however, consider such submittals as a substitute for complete shop drawings.
6. Disclosure of Product Deviations: Specifically identify and tabulate any and all deviations from the contract documents including all system functions and features. Reference the corresponding specification sections and paragraph/article numbers. All variances and deviations will be reviewed for acceptance or rejection. It will be the Contractor's sole responsibilities to comply with all other contract requirements not revealed in the disclosure of product deviations.

H. Shop Drawings:
1. Shop drawings are required for all systems and component assemblies.
2. AutoCAD ".dwg" files of the Contract Drawings may be made available upon request. These files may be used as a first step in the preparation of shop drawings. Do not consider the drawing plots from such files as a substitute for the shop drawings that are to be prepared by the contractor.
3. Shop drawings will not be accepted or considered unless they are submitted as a complete package for each specification section. Partial submittals covering less than a whole system or with incomplete interfaces to other systems will be rejected.
4. Standard manufacturer's drawings may not be used as shop drawings unless specifically modified for use on this project.
5. Each drawing requires a unique drawing number and revision level. Revisions shall per be dated and referenced per submittal number. Delta numbers and clouds on the drawings shall be used in all instances where changes have been made to the pervious submittal.
6. At a minimum, include the following shop drawings:
   a. Floor Plans: Scaled drawings showing equipment and device locations in plan view. Include wire and cable types and quantities, raceway sizing and routing. Routing

information shall indicate where rated assemblies are penetrated. Separate into as many plan series as needed to prevent overlapping information. These drawings shall be fully coordinated with other trades prior to submittal. Show relationships to adjacent surrounding structures.

b. Equipment and Control Room Plans and Elevations: Scaled, dimensioned drawings showing security equipment layouts in security equipment rooms, electrical/security closets, and control rooms. Include electrical J-boxes and receptacles, power, conduit sizing and routing, metal gutters, wiring ducts, cable trays, and supports. Indicate all other non-security cabinets, enclosures, and equipment within the room. All constraints and clearance requirements shall be shown in dimensioned drawings.

c. Cabinet, Enclosure, and Rack Elevations: Scaled, dimensioned drawings for each system equipment cabinet, enclosure, and rack showing component and equipment mounting, wire and cable routing and separation, connector and terminal block locations and labeling, and all necessary fabrication details.

d. System Block Diagrams: Single line block diagrams showing the general relationship between system components and the interconnection between systems. Use these drawings as a reference for the Single line diagrams and point-to-point diagrams by cross-referencing the shop drawing number of those diagrams on these drawings.

e. Single Line Diagrams: Interconnection diagrams for the riser and trunk wiring between equipment cabinets, enclosures racks and major components. Use the same equipment designations as the floor plans and block diagrams.

f. Point-to-Point Diagrams: Drawings which show the wiring of each component or device of each individual system. Include details of power supply, grounding, shielding, shield grounding, surge protection, fusing, connector pin-outs, terminal assignments, and similar wiring and connection details. Use the same component and device designations as the floor plans and other shop drawings.

g. Device Installation Diagrams: Details which show the installation and wiring termination of each field device in each individual system. Include settings for dipswitches, jumpers, addresses, port assignments, etc. of all devices.

h. All other shop drawings necessary to install, fabricate, locate, identify, test, service, and repair the systems provided.

7. Shop drawings approved by the Owner's Representative OR by the Consultant Engineer is not a release from Contract requirements as defined by the Drawings, Specifications, and governing codes and regulations.

I. Samples:

1. Field Samples:

a. Wires and Cables: Submit a one (1) foot sample length of each wire and cable type to be used with the cable identification clearly shown.

b. Submit all required samples along with the product data submittal for review and approval prior to installation.

c. If all wire samples cannot be submitted at the same time, submit samples with a complete list of all cables to be used noting samples which have been submitted. Update the list with each subsequent sample submittal.

2. Devices/Equipment:

a. If required by Owner, submit sample assemblies of each of the following devices or equipment along with the product data submittal for review and approval by the Owner's Representative:

1) Substituted products if requested by Owner.

2) Custom component, board, equipment or assembly.

3. Disposition: Submitted samples become property of the Owner and will not be returned.
4. Approval of any custom or modified assemblies shall be required. Submit technical information with samples.

J. Test Procedures:
1. Initial Performance Testing: Submit test procedures, forms, and checklists for point-by-point testing. Include a listing for each individual system, each control station and control panel, each equipment room, and each major system component. At a minimum, forms shall include columns for operational/non-operational status, remarks, workmanship, and date corrected. Submit a sample format for approval by the Owner's Representative a minimum of 20 days prior to testing.
2. Performance Verification Testing: Submit test forms which are identical to or similar to the accepted Initial Performance Testing forms. Obtain approval from the Owner's Representative for any changes in test procedure or forms.

K. Test Results:
1. Performance Verification Testing: Submit completed test results prior to or with the request to have the project declared substantially complete by the Owner.

L. Record (As-Built) Documents:
1. Maintain a current record set of as-built drawings on the job and as construction and installation progress, show the actual installed location of all items, material, and equipment.
2. Accurately record actual routing of all conduits including sizes and types.
3. The as-built drawings shall be available to the Owner's Representative for review and will be required for evaluation of progress payments.
4. Submit as-built shop drawings created from the approved shop drawings and updated from the site as-built drawing set and any other drawings required to depict the as-built conditions of the installed work.

M. Operational Manuals:
1. Submit the required quantity of identical manuals, which shall contain the Theory of Operation, start up, shut down and emergency procedures, and the manufacturer's operating instructions.
2. Subdivide the manual by section with tab dividers. Provide a table of contents which identifies each section and the contents therein.
3. Submit an electronic copy.

N. Maintenance Manuals:
1. Submit a complete set of maintenance documents as described in this Section. For documents of sizes greater than 11 x 17 inches, prints and electronic copy shall be furnished.
2. Manuals shall include the following as a minimum requirement:
   a. Technical system description.
   b. System schematics.
   c. Detailed wiring diagrams to identify cabling, termination, and routing.
   d. Panel assembly drawings to identify location of components, terminal strips, and equipment as required to correlate with system drawings.
   e. Descriptions and drawings as required to maintain equipment from the board to the component level.
   f. Description of software and user programmable functions. Procedures for user programmable functions shall be included.

g. A complete electronic copy of each unique system program.

3. For systems where the program resides on electronic media or other similar storage medium, furnish a copy of the media, or similar medium, to the Owner's Representative.
4. Where multiple systems are combined into a single integrated system, documentation shall include a description of the integrated system and the details of the interfaces between systems.
5. Provide a list of current telephone numbers and addresses of all material vendors and equipment manufacturers who have supplied components in this Project. Include separate service telephone list and purchasing telephone list cross-referencing with each component.

1.9 DELIVERY, STORAGE, AND HANDLING

A. Protect all materials and equipment from damage during storage at the site and throughout the construction period. Protect equipment and materials during shipment and storage against physical damage, dirt, dust, moisture, cold, rain, and any foreign substances that may damage the equipment.

B. Prevent damage from rain, dirt, sun and ground water by storing the equipment on elevated supports and covering them on all sides with securely fastened protective rigid or flexible waterproof coverings.

C. Protect conduit by storing it on elevated supports and capping the ends with suitable closure material to prevent dirt accumulation.

D. Protect all fabricated and/or installed materials and equipment against dust, dirt, moisture, physical damage, metal debris, and any foreign substances that may damage the equipment.

E. Protect painted surfaces with removable heavy Kraft paper, sheet vinyl or equal, installed at the factory and removed prior to final inspection.
   1. Replace equipment determined by the Owner's Representative to be damaged. Repaint and finish damaged paint on equipment and materials with the same quality of paint and workmanship used by manufacturer so that repaired areas are not obvious.

1.10 SITE CONDITIONS

A. Site Investigation
   1. Prior to commencement of work, the Contractor shall perform a site survey of all related existing systems and submit any potential problems of the design documents that may increase the installation cost of the project.
   2. Survey all locations where work is to be performed and verify existing conditions prior to shop drawing submittals.

B. Coordination with Security Personnel
   1. The owner will assign a contact person for the contractor to coordinate day to day activities and access into areas. Coordinate all system interruptions and scheduled down time with the contact person.

C. Security Requirements
   1. Any special security requirements will be provided by the Owner. See Division 1.

1.11 SEQUENCING AND SCHEDULING

A. General Requirements:
   1. Do not begin the project without the Owner's acceptance of proposed key project personnel for the Division 28 Work.
   2. Prepare, review, and coordinate with the Owner's Representative an approved construction (CPM) work schedule. Schedule work in areas and at times that will not interfere with scheduled activities as defined by the Owner's Representative.
   3. Provide weekly short term (4-week schedule) updates to Owner's Representative showing day to day progress and impact to occupied areas.
   4. Do not procure any equipment without accepted product data submittals. Do not perform any field installation without accepted shop drawings. Do not begin any extensive software development or programming without accepted system, operational narratives, the required Owner's coordination, and user's requirements.
   5. Pre-assemble control electronics, control panels, racks, and cabinets off-site as most practical.
   6. Install system control equipment, control panels, cabinets, racks, and consoles only after major construction in the area in which they are to be installed has been completed and areas have been cleaned, painted, and sealed.
   7. After systems installation and prior to point-by-point performance testing, thoroughly pre-test all devices and device wiring for proper performance. Then, thoroughly pre-test each system function in each state or condition under every operating mode.

B. Coordinate all work in the existing facility with the facility contact person.

1.12 WARRANTY

A. The Contractor is to provide a warranty of the work provided under this contract (including, but not limited to, software, hardware, and peripheral equipment) as a system, including interfaces to work by others for one year from the date of Acceptance of the Work. Specific Division 28 sections may require longer warranty periods. Divisions of work among various suppliers, vendors, installers, subcontractors, and other parties will not be recognized or accepted.

B. Extended Warranty: Provide itemized pricing for an Extended Service and Warranty for years 1, 2, and 3 after the initial warranty period. Describe whether all parts and labor are included in this offering.

C. Guarantee to repair and replace defective materials or workmanship during the warranty period including labor and materials.

D. An emergency maintenance (Warranty) request shall be defined as a system or portion of a system failure that affects building safety, security, and operation of critical components, including any access controlled door, which by failing, prevents entry into a building space through other means or direction. Failure of a single component (i.e., duress button, access controlled door which does not prevent access to a space through other means or direction, camera, or monitor) is not considered an emergency maintenance request.

E. Respond within four hours to an emergency maintenance request. Provide a twenty-four hour telephone contact number (24 hours per day, 365 days per year). Service response time is defined

as the period between the placing of a service request and the arrival of a qualified technician capable servicing the problem on-site.

F. Maintain a sufficient parts inventory within 50 miles of the project during the warranty period to meet the guaranteed system repair times.

G. Repair and make operational any defective materials or workmanship resulting from an emergency maintenance request within an 8-hour period from the time of the initial arrival of service personnel at the site. Correct non-emergency defective materials or workmanship within four (4) calendar days of receiving notice of the defect.

H. Where the equipment manufacturer's warranty covers a longer time period than that required by these Specifications, the manufacturer's warranty shall govern.

1.13 EXTRA MATERIALS

A. Prior to Acceptance of the Work, deliver to the Owner all spare parts and extra materials required in each Section. All spare parts and extra materials shall be brand new in their original shipping boxes or packages and shall have one year material warranty remaining at the time of delivery. Extra materials shall be available to the Contractor to use as immediate replacements during the warranty period. All extra materials used for the warranty requirements shall be replaced by the Contractor.

B. Special Tools:
   1. Provide three of each type of security screw bits used.
   2. Provide minimum of one of any specialty tools used.

PART 2 - PRODUCTS

2.1 PRODUCT OPTIONS AND SUBSTITUTIONS

A. Comply with the General and Supplementary Conditions and Division 1 Specifications.

B. The products named in this section and the sections governed by this section establish minimum qualities that substitutions must meet to be considered acceptable. The specified products have also been used in preparing the drawings and specifications, and therefore establish the basis for equipment sizing, wire and cable design, power consumption, and other design parameters.

C. Substitution requests, if permitted, will be considered only if submitted in strict accordance with the followings:
   1. Cross-reference submitted items to the Specifications using their related Section and paragraph number.
   2. Submit complete product data, descriptive literature, catalog cuts, illustrations, schematics, technical data sheets, and test data necessary for the Owner’s Representative to ascertain that proposed equipment and materials comply with specification requirements. Include manufacturer’s name, model, catalog or part numbers. Catalog cuts shall be legible and shall clearly identify equipment being submitted.

3. Disclosure of Product Deviations: Specifically identify and tabulate any and all deviations from the contract documents including all system functions and features. Reference the corresponding specification sections and paragraph/article numbers. All variances and deviations will be reviewed for acceptance or rejection. It will be the Contractor's sole responsibilities to comply with all other contract requirements not revealed in the disclosure of product deviations.

D. The Contractor shall take full responsibility for all design, coordination, and cost associated with substitutions including, but not limited to:
   1. Its integration into the total system including physical mounting space, electrical interconnection, signal wiring, power, quality, electromagnetic interference, communication protocols, and similar design considerations.
   2. Any additional materials, equipment, components, accessories, items required for equivalent system operation and performance.
   3. Any necessary changes to branch power circuits, circuit protective devices, and the Work of other trades.
   4. Any modifications to wire, cable, and raceway design.

2.2 MATERIALS AND EQUIPMENT

A. All equipment and materials required for installation under these Specifications shall be new and without blemish or defect.

B. Materials and equipment furnished shall be of current production by manufacturers regularly engaged in the manufacturing of such items, for which replacement parts are available. Specifications are prepared long in advance of project construction; the contractor is to use the newest model of the specified products available at bid time.

C. All material and equipment shall be listed, labeled, or certified by Underwriters' Laboratories, Inc., where such standards have been established. Equipment and material which are not covered by UL Standard will be accepted provided equipment and material is listed, labeled, certified or otherwise determined to meet safety requirements of a nationally recognized testing laboratory. Equipment of a class which no nationally recognized testing laboratory accepts, certifies, lists, labels, or determines to be safe will be considered, if inspected or tested in accordance with national industrial standards such as NEMA or ANSI.

D. All parts of a system shall be the product of one manufacturer. When more than one unit of the same class of equipment or material is required, such units shall be the products of a single manufacturer. Constituent parts which are similar shall be the product of a single manufacturer.

E. All components of an assembled unit need not be products of the same manufacturer; however, all components must be acceptable to the Owner's Representative. Components shall be compatible with each other and with the total assembly for the intended service.

2.3 EQUIPMENT MODIFICATIONS:

A. When standard manufactured equipment is modified from its original condition or factory options have been exercised identify the changes as noted below.

1. Clearly identify the modifications on the shop drawings.
2. Clearly identify each piece of modified equipment with a label, which states, "This unit has been modified..." and identify the modification or reference. Locate the label so that a service technician or factory service personal will be able to determine the equipment in use is non-standard and that modifications are required for service, testing and replacement.
3. Identify and describe the modifications on the Record Documents.

B. Equipment modification labels are not required for jumper or switch settings.

2.4 FABRICATION

A. Fabricate enclosures to easily accommodate interconnecting cables entering from above or below through the use of auxiliary gutters, cable trays, and conduits. Protect all metal cabinet edges where conductors cross and conduit ends with protective covering or bushing.

B. Group wires and cables by types, boards and modules, and maintain National Electrical Code clearances throughout the installation, including Class 1, Class 2, communications, and branch circuit power separations. Maintain sufficient and proper separation between microphone-level audio, line-level audio, high-level audio, and video cables.

C. Uniformly organize equipment and cable routing throughout all enclosures, racks, and cabinets. Provide wiring ducts, raceways, wire posts, D rings, wire saddles to route and secure factory and field wiring. Provide routing for all wiring from point of entry to point of termination to maintain required separation, access to all components, and general organization to the wiring. Neatly dress, route and secure wiring.

D. Mechanically fasten cabinet raceways and cable clamps to enclosure rear panels, rack members, console members, or to other system components. The use of adhesive fasteners (without mechanical fastener) is not permitted. Furnish and install cable support posts where necessary to properly support cables.

E. No splices are permitted in cabinet raceways. Exception: Splice to cable shield when within two inches of cable termination is permitted.

F. Furnish and install metal grounding type outlet strips in each equipment cabinet, enclosure, and rack. Leave a minimum of two unused receptacles at each location for future expansion. Neatly shorten and dress power cords from individual equipment to the outlet strips.

G. Provide protection from accidental contact of all terminals or exposed conductors over 25 volts within enclosures that contain Class 2 wiring. Use non-conductive barriers, heat shrink or other acceptable methods. Tape of any kind is not permitted.

H. Provide an isolated ground bus within each equipment cabinet, enclosure, and rack for single point termination of audio and data shields and grounds.

2.5 SOURCE QUALITY CONTROL

A. Shop Inspections:

1. The Owner's Representative shall have the right at all times to inspect or otherwise evaluate the Work performed or being performed and shall have access to the premises in which the Work is being performed.
2. The Owner's Representative may verify the inspections or re-inspect any item. The Owner reserves the right to reject materials and workmanship found unacceptable during inspections.

B. Shop Test and Demonstration
1. Shop Test and Demonstration shall be a major milestone that shall commence only after all shop assembly, system integration, and software development and programming is complete. Owner's approval of the integrated shop test shall be obtained before any system components are shipped to the site for installation.
2. Perform a point-by-point system demonstration of the Integrated Security System including surveillance system, duress alarm system, physical access control system, and audio announcement system to show all systems functioning and communicating as a single integrated system where required.
3. Notify the Owner a minimum of 15 working days prior to demonstration so that the Owner may witness the demonstration.
4. Conduct the demonstration in strict accordance with the test procedure accepted by the Owner. Demonstrate full compliance with the required operating modes and sequences of operation under all operating modes. Record demonstration/ test results on a report which shall include a list of all personnel witnessing the demonstration, test methods used, and a record of each specific test made.
5. If demonstration results are not in compliance with requirements, make necessary hardware and software changes, corrections, repairs, or adjustments at no additional cost to the Owner. If corrections cannot be made during the scheduled Shop Test and another shop test is required, the Contractor shall pay for all transportation, lodging and expenses of the Owner's representatives' (maximum seven people) attending the additional tests. This process shall continue until the systems are acceptable to the Owner.

2.6 FIRESTOPPING/SEALANT MATERIALS

A. Firestop and seal all penetrations of fire walls with minimum three hour sealant or Fire Stop Putty (FSP). This includes but is not limited to all raceway, conductor, sleeve, and cable tray penetrations where penetrating device does not completely seal the hole.

B. Accepted Products: International Protective Coatings Corp. FlameSafe FSP 1100, Nelson FSP, Domtar Fire-Halt, or approved equal from other manufacturers.

PART 3 - EXECUTION

3.1 EXAMINATION

A. Carefully inspect the installed Work by other trades and verify that all such Work is complete to the point where installation of the Work of this division may properly commence.

B. In the event of discrepancy, immediately notify the Owner's Representative. Do not proceed with installation in areas of discrepancy until such discrepancies have been fully resolved.

C. Install all equipment in accordance with all pertinent codes and regulations, the accepted design, and the referenced standards.

3.2 INSTALLATION

A. Equipment Identification:
1. Install a nameplate on each individual equipment rack, enclosure, boxes, cabinet, and significant equipment item.
2. Use identifiers and abbreviations defined in the Drawings whenever possible. Use plan designation for labeling, unless indicated otherwise.
3. Nameplates shall be laminated black phonemic resin with a white core and engraved lettering, a minimum of 1/4" high.
4. Engrave using upper case letters of uniform height; centered on device, cover plate, or enclosure; with all characters made clearly and distinctly.
5. All equipment shall have the manufacturer's name, address, model number and rating on a name plate securely affixed in a conspicuous place. All equipment shall bear labels attesting to Underwriters Laboratories approval where subject to Underwriters Laboratories label service.
6. Identify all field terminals and relays with device identification. Lettering shall be 3/16" high minimum.

B. Equipment Installation:
1. Install all equipment in accordance with the manufacturer's recommendations, and accepted shop drawings.
2. Install all equipment in compliance with CEC requirements, NECA's "Standard of Installation", and recognized industry practices.
3. If requested, submit structural and seismic mounting load calculations demonstrating adequate support and bracing for seismic zone 4.
4. Do not attach electrical materials to roof decking, removable or knockout panels, or temporary walls and partitions unless indicated otherwise. Use hangers and other supports to support the equipment and materials, intended for this purpose.
5. Locate equipment as close as practical to the locations shown on the Drawings.
6. Maintain minimum 3-foot working clearances on each side of equipment or equipment racks where access is required to inspect, service or adjust.
7. Check equipment against available mounting space indicated on the drawings. Coordinate location of equipment with existing devices to minimize interference. Bring all conflicts or clearance problems to the attention of the Owner's Representative during the preparation of shop drawings.
8. Where the Owner's Representative determines that equipment installation is not conveniently accessible for operation and maintenance, remove and reinstall equipment in a conveniently accessible manner at no extra cost.

C. Grounding and Shielding:
1. Comply with Section 27 05 26.

D. Surge Suppression:

1. Comply with Section 27 05 26.

3.3 FIELD QUALITY CONTROL

A. Initial Performance Testing:
   1. Initial Performance Testing is to be conducted by the Contractor.
   2. Point-by-point testing shall include the sequential operation of each system and control function in each of its operating modes. All tests are to be conducted and recorded per the accepted procedure and test forms.
   3. Notify the Owner's Representative ten days in advance that this activity will be occurring.

B. Performance Verification Testing:
   1. Performance Verification Testing (PVT) is to be conducted by the Contractor and witnessed by the Owner's Representative.
   2. Schedule point-by-point PVT only after Initial Testing has been satisfactorily completed and all necessary corrections have been made. Provide the Owner's Representative with a minimum of 10 working days' notice with a request to schedule PVT. Submit Initial Performance Test records prior to the scheduled PVT. Failure to submit test results as specified shall be cause to re-schedule testing.
   3. Point-by-point testing shall include the sequential operation of each function in each of its operating modes, in addition to completion of all required performance testing and measurement.
   4. Conduct point-by-point PVT testing in the presence of Owner's Representative. Record test results on the accepted test checklist which shall include a list of all personnel witnessing the tests. If test results are not in compliance with requirements, make necessary changes or adjustments at no additional cost, and arrange for another test. This process shall continue until the systems are acceptable to the Owner's Representative.
   5. Failure of any part of the system which precludes completion of system testing, which cannot be repaired in four (4) hours, shall be cause for terminating the test. Retesting of the entire system shall be rescheduled at the convenience of the Owner, and Contractor shall bear the Owner's costs to complete retesting.
   6. PVT will also include inspections for contract document compliance, codes and standards compliance, and workmanship.

3.4 CLEANING

A. Comply with Division 1 requirements.

B. Protect equipment during installation against entry of foreign matter on the inside. Vacuum clean all equipment both inside and outside before testing, operating and painting. Clean electrical connections with a suitable solvent prior to assembly.

C. Remove from the premises and dispose of all packing material and debris daily.

D. Upon completion of the Work, remove excess debris, materials, equipment, apparatus, tools and the like and leave the premises clean, neat, and orderly.

E. Thoroughly polish all bright metal or plated Work and remove any pasted labels, dirt, or stains from the equipment.

3.5 TRAINING

A. Provide on-site, project-specific training sessions for system operations, maintenance, and programming with designated total hours as follows:

1. Training Services:
   a. General Requirements: The Contractor shall coordinate with the Manufacturer or System Integrator to provide comprehensive on-site training for the Owner's designated Administrative and Operational personnel. The training shall be divided into Administrative Training and Operator Training sessions, each tailored to the specific roles and responsibilities of the attendees. The goal is to ensure competent, effective operation and management of the video surveillance system post-installation.
   b. Scheduling of Training: Training sessions shall be scheduled in consultation with the Owner to occur upon system completion and prior to final acceptance testing. The Contractor shall ensure training is conducted during normal working hours unless otherwise agreed upon with the Owner.

2. Administrative Training Schedule:
   a. Overview and System Management (Duration: 1-2 hours)
      1) Content shall include an advanced overview of video surveillance system capabilities, architecture, and management tools.
   b. Maintenance and Troubleshooting (Duration: 2-3 hours)
      1) Training shall cover detailed maintenance procedures, common troubleshooting scenarios, and system update management.
   c. Programming and System Configuration (Duration: 4-6 hours)
      1) Sessions shall include comprehensive training on system configuration, user management, alarm settings, and integration with other security systems.
   d. Emergency Procedures and Backup (Duration: 2 hours)
      1) Training shall address establishing emergency protocols, backup strategies, and disaster recovery plans for the video surveillance system.
   e. Administrative Q&A and Feedback (Duration: 1-2 hours)
      1) A session shall be dedicated to addressing administrative queries and collecting feedback to enhance future training sessions.

3. Operator Training Schedule:
   a. System Operations Introduction (Duration: 1-2 hours)
      1) Training shall provide a basic system overview, user interface navigation, and daily operation procedures.
   b. Monitoring and Alarm Management (Duration: 2-3 hours)
      1) The focus will be on alarm management, real-time monitoring techniques, and incident response procedures.
   c. Routine System Checks and User Management (Duration: 1-2 hours)
      1) Training shall include instructions on conducting regular system health checks and managing user access within operational limits.
   d. Operator Hands-On Practice (Duration: 3-4 hours)

1) Practical exercises shall be conducted to reinforce learning on system monitoring, alarm management, and routine operational tasks.

e. Operator Q&A and Feedback (Duration: 1-2 hours)

1) A session dedicated to operational queries and feedback collection to improve training efficacy.

4. Documentation:

a. Training Materials: The Contractor shall provide all training participants with comprehensive manuals and quick-reference guides. These materials shall include detailed instructions on system operation, maintenance, and administrative functions.

b. Certification: Upon completion of the training sessions, the Contractor shall issue certificates to all participants, acknowledging their completion of the training.

5. Follow-Up Support:

a. Post-Training Support: The Contractor shall provide a minimum of [insert number] hours of follow-up support via phone or email to address any post-training questions or issues. This support shall be available for a period of [insert duration] months following the completion of training.

SCHEDULE 280500A
SAMPLE LIST OF DIVISION 28 SUBMITTALS

1. CPM Schedule
2. Submittal Matrix
3. Schedule of Values (SOV)
4. Licenses and certifications
5. Key Project Personnel
6. Product Data
7. Shop Drawings
    a. Floor Plans
    b. Enlarged Control / Equipment Rooms and Elevations
    c. Rack and Cabinet Elevations
    d. Block Diagrams
    e. Single Line Diagrams
    f. Point- to-Point Diagrams
    g. Schematic Diagrams
    h. Installation Diagrams and Details
8. Calculations; UPS, Data
9. Sequence of Operations
10. Samples
11. Test Procedures
12. Test Results
13. Record Documents
    a. Drawings
    b. O&M Manuals
    c. Warranty
14. Extra Materials

SCHEDULE 280500 B
SUMMARY OF REQUIRED LICENSES AND CERTIFICATIONS

This list is provided for the convenience of the Contractor only.

B. Section 28 05 00 Integrated Systems Contractors

6. Key Personnel Degree or equal
7. Local Contractors License
8. Qualifications of licensed electrician performing work onsite.

END OF SECTION 280500

SECTION 281300 - PHYSICAL ACCESS CONTROL SYSTEM

PART 1 - GENERAL

1.1 INTENT

A. It is the intent of the City of McFarland to enter into a contract with a qualified contractor to have that contractor procure, provide, install, and make fully operational a Physical Access Control System (PACS) with operational characteristics and capabilities which meet or exceed the product specification and technical performance parameters contained within this document and shown on the project drawings

B. This PACS shall be installed in the McFarland Police Department Police Station located at 1234 Street, City, California.

1.2 RELATED DOCUMENTS

A. Drawings and general provisions of the Contract, including General and Supplementary Conditions and Division 01 Specification Sections, apply to this Section.

B. Division 8 Door Locking Hardware

C. Section 28 05 00 Common Work Results for Electronic Security Systems

D. Section 28 13 00 Video Surveillance System

1.3 SUMMARY

A. Section includes a physical access control system consisting of credentials, proximity card readers, door position switches, request to exit sensors, IP compatible door controllers, headend software system, workstations, and door locking hardware (door locking hardware by Div 8 Contractor).

B. Physical access control system shall be integrated with systems specified in:
   1. Division 8 Door Locking Hardware
   2. Section 27 20 00 Data Communications
   3. Section 28 16 00 Intrusion Detection System
   4. Section 28 23 00 Video Surveillance System

1.4 DEFINITIONS

A. Access Level: An authorization level or security criteria that must be met before access to a controlled space is granted

B. Access Point: A point of entry into a secure area, typically managed by a door controller and a card reader.

C. ACS: Access Control System

D. ALPR: License Plate Recognition

E. API: Application Programming Interface

F. Biometrics: A machine readable technology that identifies individuals based on reading features such as retinal scans, fingerprints, or other individualistic biological feature

G. Credential: A card, token, keyfob, or other item which is encoded with information specific to an individual

H. Door Controller: Device which integrates and access controlled point to the system headend

I. Door Strike: A door-frame mounted device which works with a mechanical lock or latch mechanism

J. DGM: Dynamic Graphical Maps

K. Encoder: A device utilized to record data onto an access credential

L. Fail Safe Access Point: A door that will unlock automatically in the event of a power failure to permit entering and exiting through the door.

M. Fail Secure Access Point: An access point that automatically locks during a power failure, preventing anyone from entering, but allowing them to exit during an emergency.

N. Input/Output (I/O) Device: An I/O device facilitates elevator control and multi-door monitoring (in/out only).

O. IP-based Access Control: IP access control technology utilizes the network to provide secure network-controlled access and management of physical doors at a facility or location.

P. Magnetic Lock (Mag Lock): A locking device that consists of an electromagnet and a strike plate that works in conjunction with a mechanical lock or latch mechanism, and uses electromagnetic attraction to lock and unlock a door.

Q. Mustering: An access control software feature that quickly verifies where individuals in a particular zone at a location for easy tracking and identification.

R. PACS: Physical Access Control System

S. PDF: Portable Document Format. The file format used by the Acrobat document-exchange-system software from Adobe.

T. Proximity Card (Prox Card): A access control credential that is encrypted with proximity technology and can be read by a proximity reader without having to physically insert the card into the reader, in order to grant a cardholder access to a location.

U. Power over Ethernet (PoE): PoE carries both power and data for the access control door controller and peripheral door hardware.

V. PoE Injector: A Power over Ethernet (PoE) injector brings PoE capabilities to non-PoE network links.

W. Request to Exit Sensor (REX): A button or device that must be activated to release the door in order to exit without triggering a forced door alert.

X. SDK: Software Development Kit

Y. SSM: Server Software Module

Z. SMA: Software Maintenance Agreement

AA. Smart Card – An access card that can be integrated with different technologies including biometric, magnetic stripe, proprietary proximity—and has a memory feature which can contain information about the cardholder.

BB. TCP/IP: Transport control protocol/Internet protocol incorporated into Microsoft Windows.

CC. UI: User Interface

DD. UPS: Uninterruptable Power Supply

EE. VMS: Video Management System

FF. WAN: Wide area network.

GG. WAV: The digital audio format used in Microsoft Windows.

HH. WMP: Windows media player.

II. Wiegand: Patented magnetic principle that uses specially treated wires embedded in the credential card.

JJ. Windows: Operating system by Microsoft Corporation.

KK. Workstation: A PC with software that is configured for specific, limited security-system functions.

1.5 ACTION SUBMITTALS

A. See Section 28 05 00 – Common Work Results for Electronic Security Systems

1.6 INFORMATIONAL SUBMITTALS

A. See Section 28 05 00 – Common Work Results for Electronic Security Systems

1.7 CLOSEOUT SUBMITTALS

A. Operation and Maintenance Data: For card readers, door position sensors, request-to-exit sensors, VMS hardware / software, storage, and work station components include all operation, troubleshooting, and maintenance manuals. In addition to items specified above, include the following:
   1. See Section 28 05 00 – Common Work Results for Electronic Security Systems

1.8 WARRANTY

A. See Section 28 05 00 – Common Work Results for Electronic Security Systems

PART 2 - PRODUCTS

2.1 QUALITY ASSURANCE

A. Manufacturer of any major component or system installed as a part of this project and not named as a basis of design shall have been in the business of manufacturing such component or system for a minimum of 5 years immediately preceding the date on this document.

B. Any major component or system installed as a part of this contract and not named as a basis of design shall have been installed in a minimum of 3 successfully completed projects of a similar size and scope. Contractor shall supply reference information with their proposal including project name, project location, and contact information for the system end-user.

2.2 BASIS OF DESIGN

A. Where a specific manufacturer's product is listed below, such product's performance characteristics and capabilities constitute the minimum acceptable, and any suggested alternates shall have characteristics and capabilities which meet or exceed the product named as the basis of design. Contractor may propose alternate products as follows –
   1. See Section 28 05 00 – Common Work Results for Electronic Security Systems

B. Owner shall make every effort to review proposed alternate equipment, however there is no guarantee that the Owner will review the alternate equipment proposal before the bid opening date, and the Contractor assumes all risk in proposing any such alternates. In the event that the Contractor's alternate equipment is judged by the Owner to not be an acceptable substitute after the Contractor submits a bid, the Contractor shall be responsible for providing the basis of design specified equipment at no additional cost to the Owner.

2.3 PACS BASIS OF DESIGN TECHNICAL PERFORMANCE SPECIFICATIONS

A. Card Reader – Kantech ioSmart and ioProx readers featuring encrypted communication, multi-technology support (proximity, smart card, biometric), vandal-resistant construction, and LED/audible feedback indicators. Readers shall support Wiegand and RS-485 communication protocols and be compatible with Kantech EntraPass software for centralized management and configuration.

B. Door Position Sensor – Magnetic door contacts with tamper-resistant design, suitable for interior and exterior applications. Sensors shall provide reliable open/closed status monitoring and integrate seamlessly with Kantech door controllers for real-time status reporting and alarm generation.

C. Request-to-Exit Sensor –
   1. Integrated into the electrified locking hardware by Division 8.
   2. Motion-based or push-button REX devices with adjustable sensitivity and time delay settings. Devices shall prevent false alarms while ensuring reliable exit detection and shall integrate with Kantech access control system for proper door release sequencing.

D. Duress Button – Alarm Controls KR-1-1-GR latching panic station with key reset, featuring stainless steel construction, guard ring protection, and both normally open and normally closed contact pairs. Station shall be tamper-resistant and provide reliable emergency signaling to the access control system.

E. Door Locking / Exit Hardware – By Division 8 Contractor

F. Power Supplies for Door Locking Hardware – LifeSafety Power units specifically designed for Kantech controllers, with appropriate capacity based on connected load calculations from project drawings. Power supplies shall include battery backup, surge protection, and status monitoring capabilities.

G. IP Compatible Door Controller – Kantech KT-1 or KT-400 IP-based door controllers featuring Power over Ethernet (PoE) operation, RS-485 communication, support for up to 4 doors per controller, and integration with EntraPass software. Controllers shall support fail-safe and fail-secure operation modes and provide real-time monitoring and control capabilities.

H. Headend / Software – Kantech EntraPass Corporate Edition software providing centralized access control management, real-time monitoring, event logging, report generation, and integration capabilities with video surveillance and intrusion detection systems. Software shall support scalable architecture, web-based administration, and mobile device compatibility.

I. Intercom System – Aiphone IX Series SIP-compliant intercom system featuring IX-SS-2G flush-mount door stations with PoE operation, vandal-resistant IP65/IK10 construction, and weather-resistant design. System shall include master station at Dispatch Center and at the Booking desk with full duplex communication and integration with access control system.

J. Transponder Reader – Nedap TRANSIT Ultimate long-range transponder reader for vehicle access control, featuring weather-resistant construction, adjustable read range, and integration with gate control systems. Reader shall support various transponder technologies and provide reliable vehicle identification for automated gate operation.

K. 4” x 4” x 8’ security pole – Energy Light Inc. H8A4SS125 for mounting the transponder.

2.4 POWER SUPPLIES

A. LifeSafety Power supplies shall be sized according to load calculations from project drawings and shall provide adequate capacity for all connected devices with appropriate battery backup duration.

PART 3 - EXECUTION

3.1 QUALITY ASSURANCE

A. Contractor shall be a factory authorized reseller / installer of all major components installed as a part of this project. Contractor shall submit proof of such authorization as a part of their bid package.

B. Contractor shall have successfully completed a minimum of 3 projects similar in size and scope to this one and shall submit references for such projects with their bid package. Reference shall include project name, location, type of facility, system(s) installed, and end-user contact information. It is expected that substantially the same personnel will be assigned to this project as participated in the referenced projects. This would include the project engineer, project manager, and lead installation technician. If any of these personnel were not involved in the referenced project, Contractor shall supply resumes for these employees documenting their experience and qualifications related to this project.

C. Complete System Responsibility: The Contractor shall provide a complete, fully functional, and operationally ready physical access control system regardless of any omissions, errors, or incompleteness in the construction documents. The Contractor acknowledges that the drawings and specifications may not show or describe every component necessary for a complete installation and shall provide all items required for a turnkey system, including all card readers, door controllers, door position switches, request-to-exit devices, duress buttons, intercom stations, power supplies, cabling, network equipment, EntraPass software, programming, user setup, system integration, testing, training, and documentation at no additional cost to the Owner. Any components not specifically detailed but necessary for proper system operation, code compliance, life safety requirements, or achievement of specified performance criteria shall be considered incidental to the work and provided by the Contractor. The system shall be delivered ready for immediate use with all access levels programmed, user credentials issued, integrations completed, training provided, and documentation delivered.

D. At a minimum, the lead installation technician assigned to this project shall be manufacturer certified in the installation of all major components installed as a part of this project.

E. System Integration Requirements: The complete system shall include full integration with existing building systems as required for proper operation, including but not limited to fire alarm systems for emergency egress override, video surveillance systems for event correlation, intrusion detection systems for coordinated security response, and building automation systems for scheduling and energy management. All integration interfaces, protocols, software modules, and programming required to achieve seamless operation between systems shall be provided regardless of whether specifically detailed in the construction documents.

F. Operational Readiness: The delivered system shall include complete user database setup with all authorized personnel programmed with appropriate access levels, door schedules configured for normal and emergency operations, holiday schedules programmed, and all system parameters optimized for the specific facility requirements. The Contractor shall coordinate with the Owner to obtain all necessary user information and access requirements during the installation process.

3.2 SITE SPECIFIC SCOPES OF WORK

A. Install main entrance electronic locks programmed to remain unlocked during normal business hours and automatically lock during off hours as shown on Drawing T201. Integrate with access control system for centralized scheduling and override capabilities.

B. Install emergency phone system for user assistance during off hours as specified on Drawing T201. Provide reliable communication link to monitoring station or designated response personnel.

C. Install 3-door interlock system to ensure only one door may be open at a time as detailed on Drawing T201. System shall include door position switches, electrified locks, access control interface, status indicators, and override key switch at designated staff location. Coordinate with electrical and fire alarm systems for power and egress override.

D. Install sallyport interlock system for hangar doors to prevent both doors from opening simultaneously as shown on Drawing T201. Integrate with door safety loops, position sensors, and fire alarm interface for emergency release. Include local override station for manual control.

E. Install weather-resistant, tamper-proof door contact on roof hatch as specified on Drawing T202. Route cabling in concealed conduit to access control panel for status monitoring and event logging. Coordinate exact location with field conditions prior to installation.

F. Install pole-mounted transponder reader on secure side of vehicle gate as detailed on Drawing T101. Mount to pole with NEMA-rated weatherproof box for cable terminations. Install 1-inch direct-burial conduit from pole to access control panel in IDF Room 127. Integrate reader and gate motor control with access system for secure operation.

G. Install heavy-duty intercom pedestal with bollard protection as shown on Drawing T101. Provide 1-inch underground direct-burial conduit with pull-strings from pedestal to access control panel. Include weatherproof terminations and coordinate trenching with utility services.

3.3 EXAMINATION

A. Examine pathway elements intended for system cabling. Check raceways and other elements for compliance with space allocations, installation tolerance, hazards to camera installation and / or operation, and other conditions affecting installation.

B. Examine roughing-in for LAN, WAN, and IP network before device installation.

C. Proceed with installation only after unsatisfactory conditions have been corrected.

3.4 WIRING

A. See Section 28 05 00 – Common Work Results for Electronic Security Systems

3.5 CONTROL SYSTEM INSTALLATION

A. PACS device locations shown on drawings are approximate, and Contractor shall verify final position with the City of McFarland before any work is done.

B. Install all PACS components per manufacturer's installation instructions.

C. Install headend / software at location(s) as directed by the City of McFarland.

D. Install key locks on any field enclosures

E. Identify system components, wiring, cabling, and terminals according to Section 26 05 53 "Identification for Electrical Systems", and Section 28 05 00 – "Common Work Results for Electronic Security Systems". In instances where there is a discrepancy between 26 05 53 and 28 05 00, the more stringent requirement shall apply.

3.6 FIELD QUALITY CONTROL

A. Manufacturer's Field Service: Engage a factory-authorized service representative to inspect, test, and adjust components, assemblies, and equipment installations, including connections.

B. Tests and Inspections:
   1. See Section 28 05 00 – Common Work Results for Electronic Security Systems

C. Performance Verification Test Schedule: See Section 28 05 00 – Common Work Results for Electronic Security Systems
   1. See Section 014000 "Quality Requirements" for retesting and reinspecting requirements and Section 017300 "Execution" for requirements for correcting the Work.

D. Physical access control system will be considered defective if it does not pass tests and inspections.

E. Prepare test and inspection reports.

3.7 ADJUSTING

A. Occupancy Adjustments: When requested within 12 months of the date of Substantial Completion, provide on-site assistance in adjusting the system to suit actual occupied conditions. Provide up to TWO (2) visits to Project during normal business hours for this purpose. Tasks shall include, but are not limited to, the following:
   1. Check cable connections.
   2. Check proper operation of readers and doors.
   3. Check proper operation of all integration driven functionalities.

3.8 CLEANING

A. Clean installed items using methods and materials recommended in writing by manufacturer.
   1. Clean PACS components as needed.

3.9 TRAINING

A. Training on the surveillance system shall be as follows:
   1. See Section 28 05 00 – Common Work Results for Electronic Security Systems

END OF SECTION 281300

SECTION 282300 - VIDEO SURVEILLANCE SYSTEM

PART 1 - GENERAL

1.1 INTENT

A. It is the intent of the Owner to enter into a contract with a qualified contractor to have that contractor procure, provide, install, and make fully operational an Electronic Video Surveillance System (EVSS) with operational characteristics and capabilities which meet or exceed the product specification and technical performance parameters contained within this document and shown on the project drawings.

B. This EVSS shall be installed in the McFarland Police Department Police Station located at 1234 Street, City, California.

1.2 RELATED DOCUMENTS

A. Retain or delete this article in all Sections of the the Project Manual.

B. Drawings and general provisions of the Contract, including General and Supplementary Conditions and Division 01 Specification Sections, apply to this Section.

C. Section 28 05 00 Common Work Results for Electronic Security Systems

D. Section 28 13 00 Physical Access Control System

E. Section 28 16 00 Intrusion Detection System

1.3 SUMMARY

A. Retain or delete this article in all Sections of the the Project Manual.
   1. Fixed Interior Wall / Ceiling Mount Megapixel Camera
   2. Fixed Exterior Wall / Pole Mount Megapixel Camera
   3. Interior Pan, Tilt, Zoom (PTZ) Wall / Ceiling Mount Megapixel Camera
   4. Exterior Pan, Tilt, Zoom (PTZ) Wall / Pole Mount Megapixel Camera
   5. Supplemental Illumination Devices
   6. Digital Video Recording and Management Software (DVRMS)
   7. System Servers
   8. System Workstations / Review Monitor
   9. Power and Data Cabling, Conduit, and Infrastructure

B. Video surveillance system shall be integrated with systems specified in:
   1. Section 28 16 00 Physical Access Control System
   2. Section 28 13 00 Intrusion Detection System

1.4 ABBREVIATIONS AND ACRONYMS

A. CPU = Central Processing Unit

B. DVD = Digital Video Disc

C. DVRMS = Digital Video Recording and Management System

D. FPS = Frames per Second

E. GB = Gigabyte

F. GBPS = Gigabyte per Second

G. HDD = Hard Disk Drive

H. HDMI = High Definition Media Interface

I. IDS = Intrusion Detection System

J. IPS = Images per Second

K. LAN = Local Area Network

L. MB = Megabyte

M. MBPS = Megabyte per Second

N. NAS = Network Attached Storage

O. LED = Light Emitting Diode

P. PACS = Physical Access Control System

Q. RAID = Redundant Array of Independent Disks

R. RAM = Random Access Memory

S. SAN = Storage Attached Network

T. TCP/IP = Transport Control Protocol / Internet Protocol

U. UPS = Uninterruptable Power Supply

V. USB = Universal Serial Bus

W. PVT = Performance Verification Testing

X. V-LAN = Virtual Local Area Network

Y. VMS = See DVRMS

Z. VSS = Video Surveillance System

AA. WAN = Wide Area Network

1.5 REFERENCE STANDARDS

A. National Television System Committee - NTSC (North America)

B. Joint Photographic Experts Group – JPEG

C. Motion Joint Photographic Experts Group – MJPEG

D. Moving Picture Experts Group – MPEG

E. Underwriters Laboratory – UL

F. Federal Communications Commission – FCC

G. Interference Causing Equipment Standard – ICES (Canada)

H. Institute of Electronic and Electrical Engineers – IEEE

I. International Standards Organization – ISO

J. International Electrotechnical Commission -IEC

K. Restriction of Hazardous Substances Directive (RoHS)

1.6 ACTION SUBMITTALS

A. See Section 28 05 00 Common Work Results for Electronic Security Systems

1.7 INFORMATIONAL SUBMITTALS

A. See Section 28 05 00 Common Work Results for Electronic Security Systems

1.8 CLOSEOUT SUBMITTALS

A. See Section 28 05 00 Common Work Results for Electronic Security Systems

1.9 QUALITY ASSURANCE

A. Electrical Components, Devices, and Accessories: Listed and labeled as defined in NFPA 70, by a qualified testing agency, and marked for intended location and application.

B. Comply with NECA 1.

C. Comply with NFPA 70.

1.10 WARRANTY

A. When warranties are required, verify with Owner's counsel that special warranties stated in this article are not less than remedies available to Owner under prevailing local laws.

B. See Section 28 05 00 Common Work Results for Electronic Security Systems

PART 2 - PRODUCTS

2.1 QUALITY ASSURANCE

A. Manufacturer of any major component or system installed as a part of this project and not named as a basis of design shall have been in the business of manufacturing such component or system for a minimum of 5 years immediately preceding the date on this document.

B. Any major component or system installed as a part of this contract and not named as a basis of design shall have been installed in a minimum of 3 successfully completed projects of a similar size and scope. Contractor shall supply reference information with their proposal including project name, project location, and contact information for the system end-user.

2.2 BASIS OF DESIGN

A. Where a specific manufacturer's product is listed below, such product's performance characteristics and capabilities constitute the minimum acceptable, and any suggested alternates shall have characteristics and capabilities which meet or exceed the product named as the basis of design. Contractor may propose alternate products as follows:

B. See Section 28 05 00 Common Work Results for Electronic Security Systems

2.3 EVSS BASIS OF DESIGN TECHNICAL PERFORMANCE SPECIFICATIONS

A. Fixed Interior Wall / Ceiling Mount Megapixel Camera - Illustra Pro Gen 3 Mini-Dome Camera with 2MP, 3MP, or 5MP resolution, featuring Wide Dynamic Range (WDR) technology, low-light performance capabilities, vandal-resistant IK10 enclosure, and IP66/67 weather rating. Camera shall support H.264/H.265 compression, multiple streaming profiles, and integrated analytics including motion detection and tampering alarms.

B. Fixed Exterior Wall / Pole Mount Megapixel Camera - Illustra Flex Gen 3 Bullet Camera with 2MP, 3MP, or 5MP resolution, featuring enhanced WDR, superior low-light performance, vandal-resistant IK10 housing, and IP66/67 weather protection. Camera shall include integrated IR illumination, support for multiple video streams, H.264/H.265 compression, and advanced analytics capabilities including intrusion detection and line crossing.

C. Digital Video Recording and Management Software (DVRMS) - ExacqVision Professional VMS software featuring EasyConnect auto-discovery for Illustra cameras, license-free operation with Illustra Pro and Flex Gen 3 cameras, enhanced security auto-hardening, multi-

streaming support, and comprehensive analytics integration. Software shall provide centralized management, remote viewing capabilities, advanced search functions, and seamless integration with access control and intrusion detection systems.

D. System Servers - Dell PowerEdge or equivalent server with minimum Intel Xeon processor, 32GB RAM, RAID 5 storage configuration with minimum 20TB usable capacity, redundant power supplies, and Windows Server operating system. Server shall be rack-mountable and include 3-year manufacturer warranty with next-business-day on-site service. (OFCI)

E. System Workstations / Review Monitor - Dell OptiPlex or equivalent workstation with a minimum Intel Core i7 processor, 16GB RAM, dedicated graphics card, dual monitor support, and Windows 10 Professional operating system. Include two 27-inch LED monitors with 1920x1080 resolution, adjustable mounting arms, and a 3-year manufacturer warranty. (OFCI)

F. License Plate Recognition (LPR) Camera System - Illustra Pro LPR Camera - High-performance license plate recognition camera system featuring minimum 2MP resolution with specialized optics optimized for license plate capture at vehicle speeds up to 45 mph. Camera shall incorporate advanced image processing algorithms capable of reading license plates under varying lighting conditions including direct sunlight, shadows, and nighttime operation with integrated infrared illumination.

This LPR camera system shall be fully compatible with the ExacqVision VMS platform specified elsewhere in this section and shall integrate seamlessly with the overall video surveillance system architecture. All components shall be new, current production models with full manufacturer support and warranty coverage.

2.4 POWER SUPPLIES

A. All system components to be connected to a UPS providing a minimum of 4 hours back-up power.

PART 3 - EXECUTION

3.1 QUALITY ASSURANCE

A. Contractor shall be a factory authorized reseller / installer of all major components installed as a part of this project. Proof of such authorization shall be submitted as a part of the bid package.

B. Contractor shall hold licenses as required by local, state, or federal agencies.

C. Contractor shall have successfully completed a minimum of 3 projects similar in size and scope to this one, and shall submit references for such projects with their bid package. Reference shall include project name, location, type of facility, system(s) installed, and end-user contact information. It is expected that substantially the same personnel will be assigned to this project as participated in the referenced projects. This would include the project engineer, project manager, and lead installation technician. If any of these personnel were not involved in the

referenced project, Contractor shall supply resumes for these employees documenting their experience and qualifications related to this project.

D. Complete System Responsibility: The Contractor shall provide a complete, fully functional, and operationally ready video surveillance system regardless of any omissions, errors, or incompleteness in the construction documents. The Contractor acknowledges that the drawings and specifications may not show or describe every component necessary for a complete installation and shall provide all items required for a turnkey system, including all cameras, mounting hardware, cabling, power supplies, network equipment, software, programming, testing, training, and documentation at no additional cost to the Owner. Any components not specifically detailed but necessary for proper system operation, code compliance, or achievement of specified performance criteria shall be considered incidental to the work and provided by the Contractor. The system shall be delivered ready for immediate use with all training completed and documentation provided.

E. At a minimum, the lead installation technician assigned to this project shall be manufacturer certified in the installation of all major components installed as a part of this project.

3.2 SITE SPECIFIC SCOPES OF WORK

A. Install one (1) License Plate Recognition (LPR) camera mounted on low pedestal post at vehicle entry/exit gate as shown on Drawing T101. Camera shall be positioned 3.5 feet above grade with capture angle less than 30 degrees vertical and 15 degrees horizontal. Provide IR-capable model with integrated analytics and route power and data via 1-inch direct-burial conduit to IDF Room 127.

B. Install one (1) exterior-rated multisensor surveillance camera at building corner as shown on Drawing T101. Camera shall be weatherproof (IP66/67), vandal-resistant (IK10), and feature multiple adjustable sensor modules for maximum coverage of adjacent facades and perimeter. Mount using manufacturer-approved corner bracket and route cabling in concealed conduit to IDF Room 127.

C. Install one (1) exterior-rated single-sensor surveillance camera wall-mounted at main lobby entrance as shown on Drawing T101. Camera shall be weatherproof (IP66), vandal-resistant (IK10), and support day/night operation. Mount securely above door with downward field of view and route cabling in concealed conduit to IDF Room 127.

D. Install one (1) dual-sensor surveillance camera ceiling-mounted in booking area as shown on Drawing T211. Camera shall have one sensor dedicated to booking area and another to circulation hallway, providing clear simultaneous coverage of both zones. Integrate with video management system for continuous recording, remote viewing, and event tagging in compliance with McFarland Police Department retention standards.

E. Install one (1) Illustra Pro LPR camera system mounted on galvanized steel pedestal post at vehicle entry/exit gate location as shown on Drawing T101, positioned 3.5 feet above finished grade with capture angle between 15-30 degrees from perpendicular to vehicle travel path and 10-75 foot capture distance for optimal license plate recognition performance. Excavate and install concrete foundation (24-inch diameter by 36-inch deep) with appropriate frost protection, coordinate with utility locating services, and install 1-inch Schedule 40 PVC conduit

underground from pedestal to IDF Room 127 at minimum 24-inch burial depth (30 inches under vehicular areas) with pull boxes at 300-foot intervals and waterproof sealing at all termination points. Install single CAT6A plenum-rated cable terminated on patch panel in IDF Room 127 and connect to PoE+ capable network switch providing minimum 25.5 watts power, include surge protection device at building entry point and equipment grounding per NEC requirements. Configure LPR system for site-specific traffic patterns with minimum 95% recognition accuracy at vehicle speeds up to 45 mph, integrate with ExacqVision VMS for centralized monitoring and event management, establish database connections for real-time comparison against authorized vehicle and watch lists, and conduct comprehensive field testing under various lighting conditions including dawn, daylight, dusk, and nighttime operations. Coordinate installation with facility security operations and gate operator contractor, provide temporary traffic control as required, restore all disturbed surfaces to original condition, and deliver complete as-built documentation, operation and maintenance manuals, and comprehensive training for facility personnel upon system acceptance.

3.3 EXAMINATION

A. Examine pathway elements intended for EVSS cabling. Check raceways and other elements for compliance with space allocations, installation tolerance, hazards to camera installation and / or operation, and other conditions affecting installation.

B. Examine roughing-in for all components before device installation.

C. Proceed with installation only after unsatisfactory conditions have been corrected.

3.4 WIRING

A. Comply with requirements in Section 26 05 33 "Raceways and Boxes for Electrical Systems."

B. Wiring Method: Install cables in raceways and or conduit unless otherwise indicated.

C. Except raceways are not required in accessible indoor ceiling spaces and attics, where Contractor shall utilize self-supported J-hooks.

D. Except raceways are not required in hollow gypsum board partitions.

E. Conceal raceways and wiring except in unfinished spaces.

F. Wiring within Enclosures: Bundle, lace, and train conductors to terminal points with no excess and without exceeding manufacturer's limitations on bending radii. Provide and use lacing bars and distribution spools.

G. Splices, Taps, and Terminations: For power and control wiring, use numbered terminal strips in junction, pull, and outlet boxes; terminal cabinets; and equipment enclosures. Tighten electrical connectors and terminals according to manufacturer's published torque-tightening values. If manufacturer's torque values are not indicated, use those specified in UL 486A-486B.

H. For LAN connection and fiber-optic and copper communication wiring, comply with:

1. Section 27 13 13 "Communications Copper Backbone Cabling"
2. Section 27 13 23 "Communications Optical Fiber Backbone Cabling"
3. Section 27 13 33 "Communications Coaxial Backbone Cabling"
4. Section 27 15 00 "Communications Horizontal Cabling."

I. Grounding: Provide independent-signal circuit grounding recommended in writing by manufacturer.

3.5 ELECTRONIC VIDEO SURVEILLANCE SYSTEM INSTALLATION

A. EVSS device locations shown on drawings J25-0014_MEP-Central_R22-25-07-24.pdf are approximate, and Contractor shall verify final position with the City of McFarland before any work is done.

B. Install all EVSS components per manufacturer's installation instructions.

C. Install control panel at location as directed by the City of McFarland.

D. Install key locks on all enclosures.

E. Identify system components, wiring, cabling, and terminals according to Section 26 05 53 "Identification for Electrical Systems."

3.6 FIELD QUALITY CONTROL

A. Manufacturer's Field Service: Engage a factory-authorized service representative to inspect, test, and adjust components, assemblies, and equipment installations, including connections.

B. Tests and Inspections:
1. Inspection: Verify that units and controls are properly installed, connected, and labeled, and that interconnecting wires and terminals are identified.
2. Pretesting: Align and adjust system and pretest components, wiring, and functions to verify that they comply with specified requirements. Prepare IDS equipment for acceptance and operational testing as follows:
   a. Prepare equipment list described in "Informational Submittals" Article.
   b. Verify operation of all cameras including LPR camera, multisensor camera, single-sensor camera, and dual-sensor camera as specified on Drawings T101 and T211.
   c. Verify proper recording and playback functionality of ExacqVision VMS software with all Illustra cameras.
   d. Verify proper operation of workstation with EVSS headend / software for logging alerts and events.
   e. Verify all integration functionality with Access Control and Intrusion Detection Systems as shown on project drawings.
3. Performance Verification Test Schedule: Schedule tests after pretesting has been successfully completed and system has been in normal functional operation for at least 14 days. Provide a minimum of 14 working days' notice of test schedule.

a. Contractor shall prepare and submit to the City of McFarland a PVT plan showing a structured and complete testing procedure. This PVT plan shall be submitted to the City of McFarland a minimum of 14 working days prior to planned start of testing.
b. PVT plan shall show equipment being tested, means of testing, and pass/fail criteria. PVT form shall include space for Contractor / Owner initials on each testing phase, along with a signature page with PVT results and follow-up notes.

4. Should any component of the system fail TWO (2) consecutive PVT tests, the Contractor shall be liable for costs incurred by the City of McFarland to provide personnel for further PVT testing.
5. See Section 014000 "Quality Requirements" for retesting and reinspecting requirements and Section 017300 "Execution" for requirements for correcting the Work.
6. Electronic video surveillance system will be considered defective if it does not pass tests and inspections.
7. Prepare test and inspection reports.

3.7 ADJUSTING

A. Occupancy Adjustments: When requested within 12 months of the date of Substantial Completion, provide on-site assistance in adjusting the system to suit actual occupied conditions. Provide up to TWO (2) visits to Project during normal business hours for this purpose. Tasks shall include, but are not limited to, the following:
1. Check cable connections.
2. Check proper operation of cameras and VMS.
3. Check proper operation of all integration driven functionalities.

3.8 CLEANING

A. Clean installed items using methods and materials recommended in writing by manufacturer.

B. Clean EVSS components as needed.

3.9 TRAINING

A. See Section 28 05 00 Common Work Results for Electronic Security Systems

END OF SECTION 282300

SECTION 31 10 00 - SITE CLEARING

PART 1 - GENERAL

1.1 SUMMARY

A. This Section includes the following:

1. Protecting existing trees, shrubs, groundcovers, plants and grass to remain.
2. Removing existing trees including roots and organic materials, shrubs, groundcovers plants and grass.
3. Clearing and grubbing.
4. Stripping and stockpiling topsoil.
5. Removing above- and below-grade site improvements.
6. Disconnecting and capping or sealing site utilities.
7. Temporary erosion and sedimentation control measures.

1.2 MATERIAL OWNERSHIP

A. Except for stripped topsoil or other materials indicated to remain Owner's property, cleared materials shall become Contractor's property and shall be removed from Project site.

1.3 PROJECT CONDITIONS

A. Traffic: Minimize interference with adjoining roads, streets, walks, and other adjacent occupied or used facilities during site-clearing operations.

1. Do not close or obstruct streets, walks, or other adjacent occupied or used facilities without permission from Owner and authorities having jurisdiction.
2. Provide alternate routes around closed or obstructed traffic ways if required by authorities having jurisdiction.

B. Salvageable Improvements: Carefully remove items indicated to be salvaged and store on Owner's premises where indicated.

C. Utility Locator Service: Notify utility locator service for area where Project is located before site clearing.

PART 2 - PRODUCTS (Not Applicable)

PART 3 - EXECUTION

3.1 PREPARATION

A. Protect and maintain benchmarks and survey control points from disturbance during construction.

B. Locate and clearly flag trees and vegetation to remain or to be relocated.

C. Protect existing site improvements to remain from damage during construction.

1. Restore damaged improvements to their original condition, as acceptable to Owner.

3.2 TEMPORARY EROSION AND SEDIMENTATION CONTROL

A. Provide temporary erosion and sedimentation control measures to prevent soil erosion and discharge of soil-bearing water runoff or airborne dust to adjacent properties and walkways, according to a sediment and erosion control plan, specific to the site, that complies with EPA 832/R-92-005 or requirements of authorities having jurisdiction, whichever is more stringent.

B. Inspect, repair, and maintain erosion and sedimentation control measures during construction until permanent vegetation has been established.

C. Remove erosion and sedimentation controls and restore and stabilize areas disturbed during removal.

3.3 TREE PROTECTION

A. Erect and maintain temporary fencing around tree protection zones before starting site clearing. Remove fence when construction is complete.

B. Do not excavate within tree protection zones, unless otherwise indicated.

C. Repair or replace trees and vegetation indicated to remain that are damaged by construction operations, in a manner approved by Architect.

3.4 UTILITIES

A. Locate, identify, disconnect, and seal or cap off utilities indicated to be removed.

1. Arrange with utility companies to shut off indicated utilities.

B. Existing Utilities: Do not interrupt utilities serving facilities occupied by Owner or others unless permitted under the following conditions and then only after arranging to provide temporary utility services according to requirements indicated:

1. Notify Architect not less than two days in advance of proposed utility interruptions.
2. Do not proceed with utility interruptions without Architect's written permission.

3.5 CLEARING AND GRUBBING

A. Fill depressions caused by clearing and grubbing operations with satisfactory soil material unless further excavation or earthwork is indicated.

B. Place fill material in horizontal layers not exceeding a loose depth of 8 inches and compact each layer to a density equal to adjacent original ground.

3.6 TOPSOIL STRIPPING

A. Remove surface vegetation and high-volume root masses larger than ¾” diameter before stripping topsoil.

B. Strip topsoil to one- or three-inches depths is encountered in a manner to prevent intermingling with underlying subsoil or other waste materials. Stripped material shall not be used as engineering fill or blended with or incorporated into any materials which will underlie any structures or other improvements on the project.

C. Stockpile topsoil materials away from edge of excavations without intermixing with subsoil. Grade and shape stockpiles to drain surface water. Cover to prevent windblown dust.

3.7 SITE IMPROVEMENTS

A. Remove existing above- and below-grade improvements as indicated and as necessary to facilitate new construction.

3.8 DISPOSAL

A. Disposal: Remove surplus soil material, unsuitable topsoil, obstructions, demolished materials, and waste materials including trash and debris, and legally dispose of them off Owner's property.

B. Separate recyclable materials produced during site clearing from other nonrecyclable materials. Store or stockpile without intermixing with other materials and transport them to recycling facilities.

END OF SECTION 31 10 00

SECTION 31 20 00 – EARTH MOVING

PART 1 - GENERAL

1.1 SUMMARY

A. This Section includes the following:

1. Preparing subgrades for slabs-on-grade, walks, pavements, lawns and grasses and exterior plants.
2. Excavating and backfilling for buildings and structures.
3. Drainage course for slabs-on-grade.
4. Base course for concrete walks, pavements.
5. Base course for asphalt paving.
6. Excavating and backfilling for utility trenches.

1.2 QUALITY ASSURANCE

Standard Specifications: Comply with the Standard Specifications for Public Works Construction (SSPWC), latest edition and supplements for rock materials. The Standard Specifications apply only to performance and materials and how they are to be incorporated into the Work. The legal/contractual relationship sections and the measurement and payment sections do not apply to this document.

1.3 REFERENCES

This specification section has been prepared using the project soils report "Geotechnical Investigation Report for the McFarland Police Station APN: 201-070-64, 35.667359, -119.231853, McFarland, California" by Soils Engineering, Inc., dated April 4, 2025, as a reference.

Additional recommendations and mitigation measures provided in the above referenced geotechnical report shall be implemented by the contractor and as instructed by the field geotechnical inspector.

The above noted geotechnical investigation report shall be made part of construction contract documents and shall be adhere to by the contractor.

1.4 DEFINITIONS

A. Backfill: Soil material used to fill an excavation.

1. Initial Backfill: Backfill placed beside and over pipe in a trench, including haunches to support sides of pipe.
2. Final Backfill: Backfill placed over initial backfill to fill a trench.

B. Base Course: Course placed between the subgrade and hot-mix asphalt or concrete paving.

C. Bedding Course: Course placed over the excavated subgrade in a trench before laying pipe.

D. Borrow Soil: Satisfactory soil imported from off-site for use as fill or backfill.

E. Classified Excavation: Removal and disposal of materials not defined as rock

F. Drainage Course: Course supporting the slab-on-grade that also minimizes upward capillary flow of pore water.

G. Excavation: Removal of material encountered above subgrade elevations and to lines and dimensions indicated.

1. Authorized Additional Excavation: Excavation below subgrade elevations or beyond indicated lines and dimensions as directed by Architect. Authorized additional excavation and replacement material will be paid for according to Contract provisions changes in the Work.
2. Unauthorized Excavation: Excavation below subgrade elevations or beyond indicated lines and dimensions without direction by Architect. Unauthorized excavation, as well as remedial work directed by Architect, shall be without additional compensation.

H. Fill: Soil materials used to raise existing grades.

I. Structures: Buildings, footings, foundations, retaining walls, slabs, tanks, curbs, mechanical and electrical appurtenances, or other man-made stationary features constructed above or below the ground surface.

J. Subgrade: Surface or elevation remaining after completing excavation, or top surface of a fill or backfill immediately below base, drainage fill, or topsoil materials.

K. Unclassified Excavation: Removal and disposal of materials encountered regardless of nature of materials, including rock.

L. Utilities: On-site underground pipes, conduits, ducts, and cables, as well as underground services within buildings.

1.5 PROJECT CONDITIONS

A. Existing Utilities: Do not interrupt utilities serving facilities occupied by Owner or others unless permitted in writing by Architect and then only after arranging to provide temporary utility services according to requirements indicated.

PART 2 - PRODUCTS

2.1 SOIL MATERIALS

A. General: Provide borrow soil materials when sufficient satisfactory soil materials are not available from excavations.

B. Satisfactory Soils: Sand, gravel, friable earth, or non-expansive clays, subject to Testing Laboratory's approval. Fill and backfill material shall be free of organic material, slag, cinders, expansive soils, trash or rubble and stones having maximum dimension greater than 6 inches.

C. Unsatisfactory Soils: Expansive and other soils as defined in the project's geotechnical investigation report.

1. Unsatisfactory soils also include satisfactory soils not maintained within 2 percent of optimum moisture content at time of compaction.

D. Base Course: Material conforming to SSPWC section 200-2.2, Crushed Aggregate Base or SSPWC section 200-2.4 Crushed Miscellaneous Base.

E. Engineered Fill: Naturally or artificially graded mixture of natural or crushed gravel, crushed stone, and natural or crushed sand; ASTM D 2940; with at least 90 percent passing a 1-1/2-inch sieve and not more than 12 percent passing a No. 200 sieve.

F. Bedding Course: Naturally or artificially graded clean, crushed sand; ASTM D 2940; except with 100 percent passing a 3/8-inch sieve and not more than 8 percent passing a No. 200 sieve.

G. Drainage Course: Narrowly graded mixture of washed, crushed stone, or crushed or uncrushed gravel; ASTM D 448; coarse-aggregate grading Size 57; with 100 percent passing a 1-1/2-inch sieve and 0 to 5 percent passing a No. 8 sieve.

2.2 ACCESSORIES

A. Warning Tape: Acid- and alkali-resistant polyethylene film warning tape manufactured for marking and identifying underground utilities, 6 inches wide and 4 mils thick, continuously inscribed with a description of the utility. Color coding shall be according to the American Public Works Association (APWA) standards:

1. Blue – Potable water and fire suppression lines.
2. Green – Sanitary sewer and storm drain lines
3. Orange – Communication, alarm or signal lines
4. Purple – Reclaimed water, irrigation, and slurry lines
5. Red – Electrical power lines, cables, conduit and lighting lines
6. Yellow – Gas, oil, steam, petroleum, or gaseous material lines.

PART 3 - EXECUTION

3.1 PREPARATION

A. Protect structures, utilities, sidewalks, pavements, and other facilities from damage caused by settlement, lateral movement, undermining, washout, and other hazards created by earthwork operations.

B. Preparation of subgrade for earthwork operations including removal of vegetation, topsoil, debris, obstructions, and deleterious materials from ground surface is specified in Division 2 Section "Site Clearing" or “Demolition”.

C. Protect and maintain erosion and sedimentation controls, which are specified in Division 2 Section "Site Clearing" or “Demolition,” during earthwork operations.

3.2 EXCAVATION

A. Unclassified Excavation: Excavate to subgrade elevations regardless of the character of surface and subsurface conditions encountered. Unclassified excavated materials may include rock, soil materials, and obstructions. No changes in the Contract Sum or the Contract Time will be authorized for rock excavation or removal of obstructions.

1. If excavated materials intended for fill and backfill include unsatisfactory soil materials and rock, replace with satisfactory soil materials.

3.3 EXCAVATION FOR STRUCTURES

A. Excavate to indicated elevations and dimensions within a tolerance of plus or minus 1 inch. If applicable, extend excavations a sufficient distance from structures for placing and removing concrete formwork, for installing services and other construction, and for inspections.

1. Excavations for Footings and Foundations: Do not disturb bottom of excavation. Excavate by hand to final grade just before placing concrete reinforcement. Trim bottoms to required lines and grades to leave solid base to receive other work.

- Excavate earth material to a minimum depth of three (3) feet below existing grade or one (1) foot below the bottom of the lowest foundation elevation in each of the structure areas, whichever is lower.

- The top eight inches of materials exposed at the bottom of the excavation shall be scarified and compacted to a minimum of 90 percent of ASTM D-1557.

- Work to lines at least five (5) feet beyond the outside edges of exterior footing and two feet beyond pavement edges.

3.4 EXCAVATION FOR WALKS AND PAVEMENTS

A. Excavate surfaces under walks and pavements to indicated lines, cross sections, elevations, and subgrades.
   1. All flatwork/pavement areas shall be removed to at least 1 foot below existing grade and one foot below bottom of concrete.
   2. The bottom of the removal shall be scarified and compacted to a minimum depth of 8 inches. The upper two feet of the finish grade must be non-expansive material. The on-site expansive clayey soil is not suitable for the upper two feet of the finish grade.
   3. Compaction in proposed concrete flatwork and sidewalk area should extend to a minimum of two feet beyond the outside edges of pavements.

3.5 EXCAVATION FOR UTILITY TRENCHES

A. Excavate trenches to indicated gradients, lines, depths, and elevations.

B. Excavate trenches to uniform widths to provide 6 inch clearance on each side of pipe or conduit. Excavate trench walls vertically from trench bottom to 12 inches higher than top of pipe or conduit, unless otherwise indicated.

C. Trench Bottoms: Excavate and shape trench bottoms to provide uniform bearing and support of pipes and conduit. Shape subgrade to provide continuous support for bells, joints, and barrels of pipes and for joints, fittings, and bodies of conduits. Remove projecting stones and sharp objects along trench subgrade.

   1. Excavate trenches 6 inches deeper than elevation required in rock or other unyielding bearing material, 4 inches deeper elsewhere, to allow for bedding course.

3.6 SUBGRADE INSPECTION

A. Proof-roll subgrade below the building slabs and pavements with heavy pneumatic-tired equipment to identify soft pockets and areas of excess yielding. Do not proof-roll wet or saturated subgrades.

B. Reconstruct subgrades damaged by freezing temperatures, frost, rain, accumulated water, or construction activities, as directed by Architect, without additional compensation.

3.7 UNAUTHORIZED EXCAVATION

A. Fill unauthorized excavation under foundations or wall footings by extending bottom elevation of concrete foundation or footing to excavation bottom, without altering top elevation. Lean concrete fill, with 28-day compressive strength of 2500 psi, may be used when approved by Architect.

   1. Fill unauthorized excavations under other construction or utility pipe as directed by Architect.

3.8 STORAGE OF SOIL MATERIALS

A. Stockpile borrow soil materials and excavated satisfactory soil materials without intermixing. Place, grade, and shape stockpiles to drain surface water. Cover to prevent windblown dust.

1. Stockpile soil materials away from edge of excavations. Do not store within drip line of remaining trees.

3.9 UTILITY TRENCH BACKFILL

A. Place backfill on subgrades free of mud, frost, snow, or ice.

B. Place and compact bedding course on trench bottoms and where indicated. Shape bedding course to provide continuous support for bells, joints, and barrels of pipes and for joints, fittings, and bodies of conduits.

C. Backfill trenches excavated under footings and within 18 inches of bottom of footings with satisfactory soil; fill with concrete to elevation of bottom of footings. Concrete is specified in Division 3 Section Cast-in-Place Concrete.

D. Provide blanket protection for all utility pipes and conduits under driveways, roadways, parking lots, and other vehicular path of travel per APWA Standard Plan 225-1 where the minimum cover over the pipes and conduits is less than 36”.

E. Place and compact initial backfill of satisfactory soil, free of particles larger than 1 inch in any dimension, to a height of 12 inches over the utility pipe or conduit.

1. Carefully compact initial backfill under pipe haunches and compact evenly up on both sides and along the full length of utility piping or conduit to avoid damage or displacement of piping or conduit. Coordinate backfilling with utilities testing.

F. Place and compact final backfill of satisfactory soil to final subgrade elevation.

G. Install warning tape directly above utilities, minimum 6 inches above top of pipe, minimum 12 inches below finished grade, except 6 inches below subgrade under pavements and slabs.

3.10 SOIL FILL

A. Plow, scarify, bench, or break up sloped surfaces steeper than 1 vertical to 4 horizontal so fill material will bond with existing material.

B. Place and compact fill material in layers to required elevations as follows:

1. Under grass and planted areas, use satisfactory soil material.
2. Under walks and pavements, use engineered fill.
3. Under steps and ramps, use engineered fill.
4. Under building slabs, use engineered fill.
5. Under footings and foundations, use engineered fill.

3.11 SOIL MOISTURE CONTROL

A. Uniformly moisten or aerate subgrade and each subsequent fill or backfill soil layer before compaction to within 2 percent of optimum moisture content.

1. Do not place backfill or fill soil material on surfaces that are muddy, frozen, or contain frost or ice.
2. Remove and replace or scarify and air dry otherwise satisfactory soil material that exceeds optimum moisture content by 2 percent and is too wet to compact to specified dry unit weight.

3.12 COMPACTION OF SOIL BACKFILLS AND FILLS

A. Place backfill and fill soil materials in layers not more than 8 inches in loose depth for material compacted by heavy compaction equipment, and not more than 4 inches in loose depth for material compacted by hand-operated tampers.

B. Place backfill and fill soil materials evenly on all sides of structures to required elevations, and uniformly along the full length of each structure.

C. Compact soil materials to not less than the following percentages of maximum dry unit weight according to ASTM D 1557:

1. Under structures, building slabs, steps, and pavements, scarify and recompact top 12 inches of existing subgrade and each layer of backfill or fill soil material to 95 percent.
2. Under walkways, scarify and recompact top 6 inches below subgrade and compact each layer of backfill or fill soil material to 90 percent.
3. Under lawn or unpaved areas, scarify and recompact top 6 inches below subgrade and compact each layer of backfill or fill soil material to 85 percent.
4. For utility trenches, compact each layer of initial and final backfill soil material to 85 percent.

3.13 GRADING

A. General: Uniformly grade areas to a smooth surface, free of irregular surface changes. Comply with compaction requirements and grade to cross sections, lines, and elevations indicated.

B. Site Grading: Slope grades to direct water away from buildings and to prevent ponding. Finish subgrades to required elevations within the following tolerances:

1. Lawn or Unpaved Areas: Plus or minus 1 inch.
2. Walks: Plus or minus 1 inch.
3. Pavements: Plus or minus 1/2 inch.

C. Grading inside Building Lines: Finish subgrade to a tolerance of 1/2 inch when tested with a 10-foot straightedge.

3.14 BASE COURSES

A. Place base course on subgrades free of mud, frost, snow, or ice.

B. On prepared subgrade, place base course under pavements and walks as follows:

1. Shape base course to required crown elevations and cross-slope grades.
2. Compact base course at optimum moisture content to required grades, lines, cross sections, and thickness to not less than 95 percent of maximum dry unit weight according to ASTM D 1557.

3.15 DRAINAGE COURSE

A. Place drainage course on subgrades free of mud, frost, snow, or ice.

B. On prepared subgrade, place and compact drainage course under cast-in-place concrete slabs-on-grade as follows:

1. Place drainage course that exceeds 6 inches in compacted thickness in layers of equal thickness, with no compacted layer more than 6 inches thick or less than 3 inches thick.
2. Compact each layer of drainage course to required cross sections and thicknesses to not less than 95 percent of maximum dry unit weight according to ASTM D 698.

3.16 FIELD QUALITY CONTROL

A. Testing Agency: Owner will engage a qualified independent geotechnical engineering testing agency to perform field quality-control testing.

B. Allow testing agency to inspect and test subgrades and each fill or backfill layer. Proceed with subsequent earthwork only after test results for previously completed work comply with requirements.

C. Footing Subgrade: At footing subgrades, at least one test of each soil stratum will be performed to verify design bearing capacities. Subsequent verification and approval of other footing subgrades may be based on a visual comparison of subgrade with tested subgrade when approved by Architect.

D. Testing agency will test compaction of soils in place according to ASTM D 1556, ASTM D 2167, ASTM D 2922, and ASTM D 2937, as applicable.

E. When testing agency reports that subgrades, fills, or backfills have not achieved degree of compaction specified, scarify and moisten or aerate, or remove and replace soil to depth required; recompact and retest until specified compaction is obtained.

3.17 PROTECTION

A. Protecting Graded Areas: Protect newly graded areas from traffic, freezing, and erosion. Keep free of trash and debris.

B. Repair and reestablish grades to specified tolerances where completed or partially completed surfaces become eroded, rutted, settled, or where they lose compaction due to subsequent construction operations or weather conditions.

C. Where settling occurs before Project correction period elapses, remove finished surfacing, backfill with additional soil material, compact, and reconstruct surfacing.

1. Restore appearance, quality, and condition of finished surfacing to match adjacent work, and eliminate evidence of restoration to greatest extent possible.

3.18 DISPOSAL OF SURPLUS AND WASTE MATERIALS

A. Disposal: Remove surplus satisfactory soil and waste material, including unsatisfactory soil, trash, and debris, and legally dispose of it off Owner's property.

END OF SECTION 31 20 00

SECTION 32 12 16 - HOT-MIX ASPHALT (HMA) PAVING

PART 1 - GENERAL

1.1 SUMMARY

A. This Section includes hot-mix asphalt paving, patching and paving overlay.

B. Traffic Stripes and Pavement Marking.
   1. traffic stripe: A longitudinal centerline or a longitudinal lane line used for separating traffic lanes in the same direction of travel or in the opposing direction of travel or a longitudinal edge line marking the edge of the traveled way or the edge of a lane at a gore area separating traffic at an exit or entrance ramp. A traffic stripe is a traffic line as shown.
   2. Pavement marking: A transverse marking such as (1) a limit line, (2) a stop line; or (3) a word, symbol, shoulder, parking stall, or railroad grade crossing marking.

1.2 SUBMITTALS

A. Product Data: For each type of product indicated. Include technical data and tested physical and performance properties.

B. Job-Mix Designs: Certification, by authorities having jurisdiction, of approval of each job mix proposed for the Work.

C. Material certificates.

D. Log of placement of asphalt, including dates, times, temperature readings and other pertinent information.

1.3 QUALITY ASSURANCE

A. Manufacturer Qualifications: Manufacturer shall be registered with and approved by authorities having jurisdiction or the DOT of the state in which Project is located.

B. Standard Specifications: Comply with the Standard Specifications for Public Works Construction (SSPWC) and the California Department of Transportation (Caltrans), latest editions and supplements for asphalt paving work. These Specifications apply only to performance and materials and how they are to be incorporated into the Work. The legal/contractual relationship sections and the measurement and payment sections do not apply to this document.

C. Asphalt-Paving Publication: Comply with AI MS-22, "Construction of Hot Mix Asphalt Pavements," unless more stringent requirements are indicated.

1.4 PROJECT CONDITIONS

A. Environmental Limitations: Do not apply asphalt materials if subgrade is wet or excessively damp or if the atmospheric temperature is at least 50 deg F and rising at time of placement or during unsuitable weather.

B. Pavement-Marking Paint: Proceed with pavement marking only on clean, dry surfaces and at an ambient or surface temperature range recommended by the paint manufacturer.

PART 2 - PRODUCTS

2.1 AGGREGATES

A. Coarse Aggregate (Type III Asphalt Concrete Mixture): Conforming to SSPWC 203-6.2.3.

B. Fine Aggregate (Type III Asphalt Concrete Mixture): Conforming to SSPWC 203-6.2.3.

C. Mineral Filler: Conforming to SSPWC 203-6.2.4.

2.2 ASPHALT CONCRETE MIXTURE

A. Composition and Grading: Conforming to SSPWC Sections 203-1 and 203-6.5.

2.3 ASPHALT MATERIALS

A. Asphalt Binder: Paving asphalt, conforming to SSPWC 203-1.2 and asphalt concrete curb shall be PG 70-10 according to SSPWC 203-6.2.1.

B. Tack Coat: PG 64-10 conforming to SSPWC 302-5.2.3.

C. Mixes: Hot-Mix Asphalt (HMA):

Wearing Course: Dense, hot-laid, hot-mix asphalt plant mix III-C3, PG 64-10 designed in conformance with SSPWC Section 203.

Base Course: Dense, hot laid, hot-mix asphalt plant mix III-B2, PG 64-10 designed in conformance with SSPWC Section 203.

D. Fog Seal: CSS-1 conforming to SSPWC 203-3.

2.4 AUXILIARY MATERIALS

A. Herbicide: Commercial chemical for weed control, registered by the EPA. Provide in granular, liquid, or wettable powder form.

B. Pavement-Marking Paint: Latex, waterborne emulsion, lead and chromate free, ready mixed, complying with Caltrans Standard Specifications - Section 84 (Federal Specification No. TT-P-1952E for Blue, Red and Green paint; and State of California Standard Specification No. PTWB-01R2 for White, Yellow and Black paint) with drying time of less than 45 minutes.

1. Color: White, Yellow, and Blue as indicated on the plans.

C. Wheel Stops: Precast, air-entrained concrete.

1. Dowels: Galvanized steel, 3/4-inch diameter, 24-inch minimum length.

PART 3 - EXECUTION

3.1 ASPHALT CONCRETE AND ASPHALT CONCRETE PAVEMENT

A. All work shall be in conformance with SSPWC Sections 203-6 and 302-5.

3.2 PATCHING

A. Hot-Mix Asphalt Pavement: Saw cut perimeter of patch and excavate existing pavement section to sound base. Excavate rectangular or trapezoidal patches, extending 12 inches into adjacent sound pavement, unless otherwise indicated. Cut excavation faces vertically. Remove excavated material. Recompact existing unbound-aggregate base course to form new subgrade.

B. Tack Coat: Tack coat shall be uniformly applied by a distributor truck at a minimum rate of SS-1h emulsified asphalt in conformance to SSWC Table 302-5.8(A) or the application rate to achieve the minimum residual rate in conformance to SSWC Table 302-5.8(B), whichever is greater. For PG 64-10 paving asphalt, the application rate shall be a minimum of the residual rate in conformance to SSWC Table 302-5.8(B).

C. Patching: Fill excavated pavements with hot-mix asphalt base mix and, while still hot, compact flush with adjacent surface.

3.3 SURFACE PREPARATION

A. Proof-roll subbase using heavy, pneumatic-tired rollers to locate areas that are unstable or that require further compaction.

B. Immediately before placing asphalt materials, remove loose and deleterious material from substrate surfaces. Ensure that prepared subgrade is ready to receive paving.

1. Sweep loose granular particles from surface of unbound-aggregate base course. Do not dislodge or disturb aggregate embedded in compacted surface of base course.

C. Herbicide Treatment: Apply herbicide according to manufacturer's recommended rates and written application instructions. Apply to dry, prepared subgrade or surface of compacted-aggregate base before applying paving materials.

D. Tack Coat: Apply uniformly to surfaces of existing pavement at a rate of 0.05 gallon per square yard.

1. Allow tack coat to cure undisturbed before applying hot-mix asphalt paving.
2. Avoid smearing or staining adjoining surfaces, appurtenances, and surroundings. Remove spillages and clean affected surfaces.
3. Asphalt binder tack coat temperature must be in the range of 285 to 350 deg F when applied.

3.4 HOT-MIX ASPHALT PLACING

A. Machine place hot-mix asphalt on prepared surface, spread uniformly, and strike off. Place asphalt mix by hand to areas inaccessible to equipment in a manner that prevents segregation of mix. Place each course to required grade, cross section, and thickness when compacted.

1. Spread mix at minimum temperature of 285 deg F and maximum temperature of 350 deg F.
2. Regulate paver machine speed to obtain smooth, continuous surface free of pulls and tears in asphalt-paving mat.

B. Place paving in consecutive strips not less than 10 feet wide unless infill edge strips of a lesser width are required.

C. Promptly correct surface irregularities in paving course behind paver. Use suitable hand tools to remove excess material forming high spots. Fill depressions with hot-mix asphalt to prevent segregation of mix; use suitable hand tools to smooth surface.

3.5 FOG SEAL

A. Apply asphaltic emulsion for fog seal coat at a residual asphalt rate of 0.2 to 0.06 gal/sq yd.

B. Apply fog seal coat when the ambient temperature is above 40 degrees F.

C. At the time of application, the temperature of asphaltic emulsion must be from 130 to 180 degrees F.

D. Apply asphaltic emulsion when the ambient air temperature is from 65 to 110 degrees F and pavement surface is at least 80 degrees F.

E. Do not apply asphaltic emulsion when weather forecasts predict the ambient air temperature will fall below 39 degrees F within 24 hours after application.

F. When tested under California Test 339, the application rate for asphaltic emulsion must not vary from the average by more than:
   a. 15 percent in the traverse direction
   b. 10 percent in longitudinal direction

3.6 COMPACTION

A. General: Begin compaction as soon as placed hot-mix paving will bear roller weight without excessive displacement. Compact hot-mix paving with hot, hand tampers or vibratory-plate compactors in areas inaccessible to rollers.

1. Pave HMA in maximum 3" thick compacted layers.

2. Minimum atmospheric temperature shall be 55 deg F, and minimum surface temperature shall be 60 deg F. If the surface to be paved is both in sunlight and shade, pavement surface temperatures must be taken in the shade.

3. Complete compaction for Base Course before surface temperature drops below 250 deg F, and for Wearing Course before surface temperature drops below 150 deg F.

B. Breakdown Rolling: Complete breakdown or initial rolling immediately after rolling joints and outside edge. Examine surface immediately after breakdown rolling for indicated crown, grade, and smoothness. Correct laydown and rolling operations to comply with requirements.

C. Intermediate Rolling: Begin intermediate rolling immediately after breakdown rolling while hot-mix asphalt is still hot enough to achieve specified density. Continue rolling until hot-mix asphalt course has been uniformly compacted to the following density:

1. Average Density: 92 percent of reference maximum theoretical density according to ASTM D 2041, but not less than 90 percent nor greater than 96 percent.

D. Finish Rolling: Finish roll paved surfaces to remove roller marks while hot-mix asphalt is still warm.

E. Protection: After final rolling, do not permit vehicular traffic on pavement until it has cooled and hardened.

F. Erect barricades to protect paving from traffic until mixture has cooled enough not to become marked.

3.7 INSTALLATION TOLERANCES

A. Thickness: Compact each course to produce the thickness indicated within the following tolerances:

1. Base Course: Plus or minus 1/2 inch.
2. Wearing Course: Plus 1/4 inch (no minus).
3. Total Base Course plus Wearing Course shall not be less than specified thickness.

B. Surface Smoothness: Compact each course to produce a surface smoothness within the following tolerances as determined by using a 10-foot straightedge applied transversely or longitudinally to paved areas:

1. Base Course: 1/4 inch

2. Wearing Course: 1/8 inch
3. Crowned Surfaces: Test with crowned template centered and at right angle to crown. Maximum allowable variance from template is 1/4 inch.

3.8 PAVEMENT STRIPING AND MARKING

A. Do not apply pavement-marking paint until layout, colors, and placement have been verified with Architect.

B. Allow paving to age before starting pavement striping and marking, as recommended by the paint manufacturer.

C. Sweep and clean surface to eliminate loose material and dust in addition to recommended surface preparation by the paint manufacturer.

D. Apply paint with mechanical equipment to produce pavement markings, of dimensions indicated, with uniform, straight edges. Apply at manufacturer's recommended rates to provide a minimum wet film thickness of 15 mils.

E. Do not paint if the atmospheric temperature could drop below 50 deg F during the drying period.

3.9 WHEEL STOPS

A. Securely attach wheel stops into pavement with not less than two galvanized steel dowels embedded at one-quarter to one-third points. Securely install dowels into pavement and bond to wheel stop. Recess head of dowel 1 inch beneath top of wheel stop.

3.10 FIELD QUALITY CONTROL

A. Testing Agency: Owner will engage a qualified independent testing and inspecting agency to perform field tests and inspections and to prepare test reports.

B. Additional testing and inspecting, at Contractor's expense, will be performed to determine compliance of replaced or additional work with specified requirements.

C. Remove and replace or install additional hot-mix asphalt where test results or measurements indicate that it does not comply with specified requirements.

3.11 DISPOSAL

A. Except for material indicated to be recycled, remove excavated materials from Project site and legally dispose of them in an EPA-approved landfill.

END OF SECTION 32 12 16

SECTION 32 13 13 – CONCRETE PAVING

PART 1 - GENERAL

1.1 SUMMARY

A. This Section includes exterior cement concrete pavement for the following:

1. Driveways and roadways.
2. Parking lots.
3. Curbs and gutters.
4. Walkways.

1.2 SUBMITTALS

A. Product Data: For each type of product indicated, including admixtures.

B. Design Mixtures: For each concrete pavement mixture.

1.3 QUALITY ASSURANCE

A. Manufacturer Qualifications: Manufacturer of ready-mixed concrete products who complies with ASTM C 94/C 94M requirements for production facilities and equipment.

B. ACI Publications: Comply with ACI 301, "Specification for Structural Concrete," unless modified by requirements in the Contract Documents.

C. All work to be performed and materials to be used shall be in accordance with the Standard Specifications for Public Works Construction, latest edition and supplements.

D. The Contractor shall have one copy of the Standard Specifications at the job site.

E. The Standard Specifications apply only to performance and materials and how they are to be incorporated into the Work. The legal/contractual relationship sections and the measurement and pavement sections do not apply to this document.

PART 2 - PRODUCTS

2.1 STEEL REINFORCEMENT

A. Plain-Steel Welded Wire Reinforcement: ASTM A 185, fabricated from as-drawn steel wire into flat sheets.

B. Reinforcing Bars: ASTM A 615/A 615M, Grade 60; deformed.

C. Bar Supports: Bolsters, chairs, spacers, and other devices for spacing, supporting, and fastening reinforcing bars, welded wire reinforcement, and dowels in place. Manufacture bar supports according to CRSI's "Manual of Standard Practice."

2.2 CONCRETE MATERIALS

A. Cementitious Material: Use the following cementitious materials, of the same type, brand, and source throughout the Project:

1. Portland Cement: ASTM C 150, Type II, low alkali. Supplement with the following:

a. Pozzolan: ASTM C618, Class F or N Fly Ash, 100 pounds maximum per cubic yard, containing one percent or less carbon. Fly ash shall not be used in excess of 15 percent by weight of total cement quantity.

B. Combined Aggregates: Shall conform to the gradings in SSPWC Table 201-1.4.2.

C. Water: ASTM C 94/C 94M.

2.3 CURING MATERIALS

A. Liquid Curing Compound: ASTM C309, fugitive dye dissipating type, complying with Rule II 13 of the South Coast Air Quality Management District and Federal Air Quality Regulation 40 CFR 52.254.

B. Moisture-Retaining Cover (Curing Sheet): ASTM C 171, non-staining polyethylene film or white burlap-polyethylene sheet.

C. Water: Potable.

D. Evaporation Retarder: Waterborne, monomolecular film forming; manufactured for application to fresh concrete.

2.4 RELATED MATERIALS

A. Expansion- and Isolation-Joint-Filler Strips: ASTM D 1751, asphalt-saturated cellulosic fiber.

B. Color Pigment: ASTM C 979, synthetic mineral-oxide pigments or colored water-reducing admixtures; color stable, free of carbon black, nonfading, and resistant to lime and other alkalis.

C. Slip-Resistive Aggregate Finish: Factory-graded, packaged, rustproof, nonglazing, abrasive aggregate of fused aluminum-oxide granules or crushed emery with emery aggregate containing not less than 50 percent aluminum oxide and not less than 20 percent ferric oxide; unaffected by freezing, moisture, and cleaning materials.

D. Pavement-Marking Paint: Latex, waterborne emulsion, lead and chromate free, ready mixed, complying with Caltrans Standard Specifications - Section 84 (Federal Specification No. TT-P-1952 for Blue, Red and Green paint; and State of California Standard Specification No. PTWB-01 for White, Yellow and Black paint) with drying time of less than 45 minutes.

1. Color: White, Yellow, and Blue as indicated on the plans.

2.5 WHEEL STOPS

A. Wheel Stops: Precast, air-entrained concrete.

1. Dowels: Galvanized steel, 3/4-inch diameter, 24-inch minimum length.

2.6 CONCRETE MIXTURES

A. Prepare design mixtures in conformance with SSPWS Section 201, with the following properties:

1. Concrete class:
   a. 560-C-3250, Maximum Slump: 5 inches
   b. 560-CSP-3250, Maximum Slump: 5 inches
2. Maximum Water-Cementitious Materials Ratio at Point of Placement: 0.45

B. Color Pigment: Add color pigment to concrete mixture according to manufacturer's written instructions.

2.7 CONCRETE MIXING

A. Ready-Mixed Concrete: Measure, batch, and mix concrete materials and concrete according to ASTM C 94/C 94M. Furnish batch certificates to Architect for each batch discharged and used in the Work.

PART 3 - EXECUTION

3.1 PORTLAND CONCRETE PAVEMENT

A. All work shall be in conformance with SSPWC Sections 201-1 and 302-6.

3.2 EXAMINATION

A. Proof-roll prepared subbase surface below concrete pavements with heavy pneumatic-tired equipment to identify soft pockets and areas of excess yielding.

3.3 EDGE FORMS AND SCREED CONSTRUCTION

A. Set, brace, and secure edge forms, bulkheads, and intermediate screed guides for pavement to required lines, grades, and elevations. Install forms to allow continuous progress of work and so forms can remain in place at least 24 hours after concrete placement.

B. Clean forms after each use and coat with form-release agent to ensure separation from concrete without damage.

3.4 STEEL REINFORCEMENT

A. General: Comply with CRSI's "Manual of Standard Practice" for fabricating, placing, and supporting reinforcement.

3.5 JOINTS

A. General: Form construction, isolation, and control joints and tool edgings true to line with faces perpendicular to surface plane of concrete. Construct transverse joints at right angles to centerline, unless otherwise indicated.

B. Construction Joints: Set construction joints at side and end terminations of pavement and at locations where pavement operations are stopped for more than one-half hour unless pavement terminates at isolation joints.

C. Isolation Joints: Form isolation joints of preformed joint-filler strips abutting concrete curbs, catch basins, manholes, inlets, structures, walks, other fixed objects, and where indicated.

D. Control Joints: Form weakened-plane control joints, sectioning concrete into areas as indicated. Construct control joints for a depth equal to at least one-fourth of the concrete thickness to match jointing of existing adjacent concrete pavement.

E. Edging: Tool edges of pavement, gutters, curbs, and joints in concrete after initial floating with an edging tool to a 1/4-inch radius. Repeat tooling of edges after applying surface finishes. Eliminate tool marks on concrete surfaces.

3.6 CONCRETE PLACEMENT

A. Moisten subbase to provide a uniform dampened condition at time concrete is placed.

B. Comply with ACI 301 requirements for measuring, mixing, transporting, and placing concrete.

C. Deposit and spread concrete in a continuous operation between transverse joints. Do not push or drag concrete into place or use vibrators to move concrete into place.

D. Screed pavement surfaces with a straightedge and strike off.

E. Commence initial floating using bull floats or darbies to impart an open textured and uniform surface plane before excess moisture or bleed water appears on the surface. Do not further disturb concrete surfaces before beginning finishing operations or spreading surface treatments.

3.7 FLOAT FINISHING

A. General: Do not add water to concrete surfaces during finishing operations.

B. Float Finish: Begin the second floating operation when bleed-water sheen has disappeared and concrete surface has stiffened sufficiently to permit operations. Float surface with power-driven floats, or by hand floating if area is small or inaccessible to power units. Finish surfaces to true planes. Cut down high spots and fill low spots. Refloat surface immediately to uniform granular texture.

1. Burlap Finish: Drag a seamless strip of damp burlap across float-finished concrete, perpendicular to line of traffic, to provide a uniform, gritty texture.
2. Medium-to-Fine-Textured Broom Finish: Draw a soft bristle broom across float-finished concrete surface perpendicular to line of traffic to provide a uniform, fine-line texture.
3. Medium-to-Coarse-Textured Broom Finish: Provide a coarse finish by striating float-finished concrete surface 1/16 to 1/8 inch deep with a stiff-bristled broom, perpendicular to line of traffic.

C. Slip-Resistive Aggregate Finish: Before final floating, spread slip-resistive aggregate finish on pavement surface according to manufacturer's written instructions.

1. Cure concrete with curing compound recommended by slip-resistive aggregate manufacturer. Apply curing compound immediately after final finishing.
2. After curing, lightly work surface with a steel wire brush or abrasive stone and water to expose nonslip aggregate.

3.8 CONCRETE PROTECTION AND CURING

A. General: Protect freshly placed concrete from premature drying and excessive cold or hot temperatures.

B. Comply with ACI 306.1 for cold-weather protection.

C. Evaporation Retarder: Apply evaporation retarder to concrete surfaces if hot, dry, or windy conditions cause moisture loss approaching 0.2 lb/sq. ft. x h before and during finishing operations. Apply according to manufacturers written instructions after placing, screeding, and bull floating or darbying concrete, but before float finishing.

D. Begin curing after finishing concrete but not before free water has disappeared from concrete surface.

E. Curing Methods: Cure concrete by moisture curing, moisture-retaining-cover curing, curing compound or a combination of these methods.

3.9 PAVEMENT TOLERANCES

A. Comply with tolerances as follows

1. Elevation: 1/4 inch
2. Thickness: Plus 3/8 inch minus 1/4 inch
3. Surface: Gap below 10-foot-long, unleveled straightedge not to exceed 1/4 inch.
4. Joint Spacing: 3 inches.
5. Contraction Joint Depth: Plus 1/4 inch no minus.
6. Joint Width: Plus 1/8 inch, no minus.

3.10 PAVEMENT MARKING

A. Do not apply pavement-marking paint until layout, colors, and placement have been verified with Architect.

B. Allow concrete pavement to cure for 28 days and be dry before starting pavement marking.

C. Sweep and clean surface to eliminate loose material and dust in addition to recommended surface preparation by the paint manufacturer.

D. Apply paint with mechanical equipment to produce pavement markings of dimensions indicated with uniform, straight edges. Apply at manufacturer's recommended rates to provide a minimum wet film thickness of 15 mils.

E. Do not paint if the atmospheric temperature could drop below 50 deg F during the drying period.

3.11 WHEEL STOPS

A. Securely attach wheel stops into pavement with not less than two galvanized steel dowels embedded in holes drilled or cast into wheel stops at one-quarter to one-third points. Firmly bond each dowel to wheel stop and to pavement. Securely install dowels into pavement and bond to wheel stop. Recess head of dowel 1 inch beneath top of wheel stop.

3.12 REPAIRS AND PROTECTION

A. Remove and replace concrete pavement that is broken, damaged, or defective or that does not comply with requirements in this Section.

B. Protect concrete from damage. Exclude traffic from pavement for at least 14 days after placement.

C. Maintain concrete pavement free of stains, discoloration, dirt, and other foreign material. Sweep concrete pavement not more than two days before date scheduled for Substantial Completion inspections.

END OF SECTION 32 13 13

SECTION 323113 - CHAIN LINK FENCES AND GATES

PART 1 - GENERAL

1.1 RELATED DOCUMENTS

A. Drawings and general provisions of the Contract, including General and Supplementary Conditions and Division 01 Specification Sections, apply to this Section.

1.2 SUMMARY

A. Section Includes:

1. Chain-link fences.
2. Swing gates.
3. Privacy slats.

1.3 ACTION SUBMITTALS

A. Product Data: For each type of product.

1. Include construction details, material descriptions, dimensions of individual components and profiles, and finishes for the following:

a. Fence and gate posts, rails, and fittings.
b. Chain-link fabric, reinforcements, and attachments.
c. Accessories: Privacy slats.
d. Gates and hardware.

B. Shop Drawings: For each type of fence and gate assembly.

1. Include plans, elevations, sections, details, and attachments to other work.
2. Include accessories, hardware, gate operation, and operational clearances.

1.4 FIELD CONDITIONS

A. Field Measurements: Verify layout information for chain-link fences and gates shown on Drawings in relation to property survey and existing structures. Verify dimensions by field measurements.

1.5 WARRANTY

A. Special Warranty: Manufacturer agrees to repair or replace components of chain-link fences and gates that fail in materials or workmanship within specified warranty period.

1. Failures include, but are not limited to, the following:

    a. Failure to comply with performance requirements.
    b. Deterioration of metals, metal finishes, and other materials beyond normal weathering.

2. Warranty Period: Five years from date of Substantial Completion.

PART 2 - PRODUCTS

2.1 PERFORMANCE REQUIREMENTS

A. Structural Performance: Chain-link fence and gate frameworks shall withstand the design wind loads and stresses for fence height(s) and under exposure conditions indicated according to ASCE/SEI 7.

1. Design Wind Load: As indicated on Drawings.

    a. Minimum Post Size: Determine according to ASTM F1043 for post spacing not to exceed 10 feet (3 m) for Material Group IA, ASTM F1043, Schedule 40 steel pipe.
    b. Minimum Post Size and Maximum Spacing: Determine according to CLFMI WLG 2445, based on mesh size and pattern specified.

2.2 CHAIN-LINK FENCE FABRIC

A. General: Provide fabric in one-piece heights measured between top and bottom of outer edge of selvage knuckle or twist according to "CLFMI Product Manual" and requirements indicated below:

1. Fabric Height: As indicated on Drawings.
2. Steel Wire for Fabric: Wire diameter of 0.148 inch (3.76 mm).

    a. Mesh Size: 2 inches (50 mm).
    b. Zinc-Coated Fabric: ASTM A392, Type II, Class 1, 1.2 oz./sq. ft. (366 g/sq. m) with zinc coating applied before or after weaving.

    c. Coat selvage ends of metallic-coated fabric before the weaving process with manufacturer's standard clear protective coating.

3. Selvage: Twisted top and knuckled bottom.

2.3 FENCE FRAMEWORK

A. Posts and Rails: ASTM F1043 for framework, including rails, braces, and line; terminal; and corner posts. Provide members with minimum dimensions and wall thickness according to ASTM F1043 based on the following:

1. Fence Height: As indicated on Drawings.

2. Heavy-Industrial-Strength Material: Group IA, round steel pipe, Schedule 40.

   a. Line Post: 1.9 inches (48 mm) in diameter.
   b. End, Corner, and Pull Posts: 2.375 inches (60 mm) in diameter.
   c. Base plates: Minimum ¼", hot dipped galvanized, four anchor holes per plate. Baseplate to be fully welded to post, and hot dipped galvanized after welding.
      1) Fasten to concrete slab using 3/8" diameter expansion bolts.

3. Horizontal Framework Members: Intermediate, top, and bottom rails according to ASTM F1043.

   a. Top Rail: 1.66 inches (42 mm) in diameter.

4. Brace Rails: ASTM F1043.
5. Metallic Coating for Steel Framework:

   a. Type A: Not less than minimum 2.0-oz./sq. ft. (0.61-kg/sq. m) average zinc coating according to ASTM A123/A123M or 4.0-oz./sq. ft. (1.22-kg/sq. m) zinc coating according to ASTM A653/A653M.
   b. Type B: Zinc with organic overcoat, consisting of a minimum of 0.9 oz./sq. ft. (0.27 kg/sq. m) of zinc after welding, a chromate conversion coating, and a clear, verifiable polymer film.

2.4 SWING GATES

A. General: ASTM F900 for gate posts and single swing gate types.

   1. Gate Leaf Width: As indicated.
   2. Framework Member Sizes and Strength: Based on gate fabric height of more than 72 inches (1830 mm).

B. Pipe and Tubing:

   1. Zinc-Coated Steel: ASTM F1043 and ASTM F1083; protective coating and finish to match fence framework.
   2. Gate Posts: Round tubular steel.
   3. Gate Frames and Bracing: Round tubular steel.

C. Frame Corner Construction: Welded.

D. Hardware:

   1. Hinges: 180-degree outward swing.
   2. Latch: Permitting operation from both sides of gate with provision for padlocking accessible from both sides of gate.

2.5 FITTINGS

A. Provide fittings according to ASTM F626.

B. Post Caps: Provide for each post.

1. Provide line post caps with loop to receive tension wire or top rail.

C. Rail and Brace Ends: For each gate, corner, pull, and end post.

D. Rail Fittings: Provide the following:

1. Top Rail Sleeves: Pressed-steel or round-steel tubing not less than 6 inches (152 mm) long.
2. Rail Clamps: Line and corner boulevard clamps for connecting intermediate and bottom rails to posts.

E. Tension and Brace Bands: Pressed steel.

F. Tension Bars: Steel, length not less than 2 inches (50 mm) shorter than full height of chain-link fabric. Provide one bar for each gate and end post, and two for each corner and pull post, unless fabric is integrally woven into post.

G. Truss Rod Assemblies: Steel, hot-dip galvanized after threading rod and turnbuckle or other means of adjustment.

H. Tie Wires, Clips, and Fasteners: According to ASTM F626.

1. Standard Round Wire Ties: For attaching chain-link fabric to posts, rails, and frames, according to the following:
   a. Aluminum: ASTM B211 (ASTM B211M); Alloy 1350-H19; 0.192-inch- (4.88-mm-) diameter, mill-finished wire.

I. Finish:

1. Metallic Coating for Pressed Steel or Cast Iron: Not less than 1.2 oz./sq. ft. (366 g/sq. m) of zinc.

2.6 PRIVACY SLATS

A. Tubular Polyethylene Slats: Minimum 0.023-inch (0.58-mm)-thick tubular polyethylene, manufactured for chain-link fences from virgin polyethylene with UV inhibitor, sized to fit mesh specified for direction indicated, with.

B. Color: As selected by Architect from manufacturer's full range.

PART 3 - EXECUTION

3.1 EXAMINATION

A. Examine areas and conditions, with Installer present, for compliance with requirements for site clearing, earthwork, pavement work, and other conditions affecting performance of the Work.

1. Do not begin installation before final grading is completed unless otherwise permitted by Architect.

B. Proceed with installation only after unsatisfactory conditions have been corrected.

3.2 CHAIN-LINK FENCE INSTALLATION

A. Install chain-link fencing according to ASTM F567 and more stringent requirements specified.

B. Post Excavation: Drill or hand-excavate holes for posts to diameters and spacings indicated, in firm, undisturbed soil.

C. Post Setting: Set posts with mechanical anchors on to concrete slab.

1. Verify that posts are set plumb, aligned, and at correct height and spacing, and hold in position during setting with concrete or mechanical devices.

D. Terminal Posts: Install terminal end, corner, and gate posts according to ASTM F567 and terminal pull posts at changes in horizontal or vertical alignment of 30 degrees or more.

E. Line Posts: Space line posts uniformly at 96 inches (2440 mm) o.c.

F. Post Bracing and Intermediate Rails: Install according to ASTM F567, maintaining plumb position and alignment of fence posts. Diagonally brace terminal posts to adjacent line posts with truss rods and turnbuckles. Install braces at end and gate posts and at both sides of corner and pull posts.

1. Locate horizontal braces at midheight of fabric 72 inches (1830 mm) or higher, on fences with top rail, and at two-third fabric height on fences without top rail. Install so posts are plumb when diagonal rod is under proper tension.

G. Top Rail: Install according to ASTM F567, maintaining plumb position and alignment of fence posts. Run rail continuously through line post caps, bending to radius for curved runs and terminating into rail end attached to posts or post caps fabricated to receive rail at terminal posts. Provide expansion couplings as recommended in writing by fencing manufacturer.

H. Intermediate and Bottom Rails: Secure to posts with fittings.

I. Chain-Link Fabric: Apply fabric to outside of enclosing framework. Leave 1-inch (25-mm) bottom clearance between finish grade or surface and bottom selvage unless otherwise indicated. Pull fabric taut and tie to posts, rails, and tension wires. Anchor to framework so fabric remains under tension after pulling force is released.

J. Tension or Stretcher Bars: Thread through fabric and secure to end, corner, pull, and gate posts, with tension bands spaced not more than 15 inches (380 mm) o.c.

K. Tie Wires: Use wire of proper length to firmly secure fabric to line posts and rails. Attach wire at one end to chain-link fabric, wrap wire around post a minimum of 180 degrees, and attach other end to chain-link fabric according to ASTM F626. Bend ends of wire to minimize hazard to individuals, dogs, and clothing. Wires to be wrapped tight to fence fabric with no wire projections.

1. Maximum Spacing: Tie fabric to line posts at 12 inches (300 mm) o.c. and to braces at 24 inches (610 mm) o.c.

L. Fasteners: Install nuts for tension bands and carriage bolts on the side of fence opposite the fabric side. Peen ends of bolts or score threads to prevent removal of nuts.

M. Privacy Slats: Install slats in direction indicated, securely locked in place.
1. Diagonally for privacy factor of 80 to 85.

3.3 GATE INSTALLATION

A. Install gates according to manufacturer's written instructions, level, plumb, and secure for full opening without interference. Attach fabric as for fencing. Attach hardware using tamper-resistant or concealed means. Install ground-set items in concrete for anchorage. Adjust hardware for smooth operation.

3.4 ADJUSTING

A. Gates: Adjust gates to operate smoothly, easily, and quietly, free of binding, warp, excessive deflection, distortion, nonalignment, misplacement, disruption, or malfunction, throughout entire operational range. Confirm that latches and locks engage accurately and securely without forcing or binding.

B. Lubricate hardware and other moving parts.

END OF SECTION 323113

SECTION 33 11 00 – WATER UTILITY DISTRIBUTION PIPING

PART 1 - GENERAL

1.1 SUMMARY

A. Requirements: Provide water distribution system, complete, as indicated on the Drawings or inferable therefrom and/or as specified in accordance with the Contract Documents.

1.2 SUBMITTALS

A. Product Data: Submit copies of manufacturer's specifications and installation instructions for each material. Include certification or other data verifying compliance with required characteristics. Indicate by transmittal form that copy of each has been distributed to the Installer.

B. Shop Drawings: Submit layout and shop drawings as required under Section Submittals. Include details of reinforced concrete structures. [**ENGINEER TO SPECIFY SHOP DRAWINGS, AS PROJECT CONDITIONS WARRANT**]

C. Test Reports: Submit certified Test Reports showing compliance of the following items in accordance with Section General Conditions.

1. Laboratory test for bedding and trench stabilization materials.
2. Concrete design mix.
3. Compression tests.
4. Water Test Reports: Submit results of water sample tests by State or local health authorities

1.3 QUALITY ASSURANCE

A. Regulatory Requirements:

1. Comply with requirements of utility company supplying water. Include tapping of water mains and backflow prevention.
2. All work to be performed and materials to be used shall be in accordance with the Standard Specifications for Public Works Construction, latest edition and supplements.
3. The Contractor shall have one copy of the Standard Specifications at the job site.
4. The Standard Specifications apply only to performance and materials and how they are to be incorporated into the Work. The legal/contractual relationship sections and the measurement and pavement sections do not apply to this document.

B. Piping materials shall bear label, stamp, or other markings of specified testing agency.

C. Comply with FM's "Approval Guide" or UL's "Fire Protection Equipment Directory" for fire-service-main products.

D. NFPA Compliance: Comply with NFPA 24 for materials, installations, tests, flushing, and valve and hydrant supervision for fire-service-main piping for fire suppression.

E. NSF Compliance:

1. Comply with NSF 14 for plastic potable-water-service piping.
2. Comply with NSF 61 for materials for water-service piping and specialties for domestic water.

F. California Health and Safety Code:

1. Per Section 116875 subparagraphs a through d, effective January 1, 2010 as specified in SB 1334, Stat. 2008, c.580 – all domestic water systems have to use lead-free pipes, fixtures, solder or flux.

1.4 PROJECT CONDITIONS

A. Existing Utilities: Do not interrupt utilities serving facilities occupied by Owner or others unless permitted under the following conditions and then only after arranging to provide temporary utility services according to requirements indicated:

1. Notify architect, owner's representative not less than two days in advance of proposed utility interruptions.
2. Do not proceed with utility interruptions without architect, owner's representative written permission.

1.5 DELIVERY, STORAGE, AND HANDLING

A. Prevent damage to materials during loading, transportation, and unloading. Store equipment with moving parts off ground on platforms or skids.

1.6 COORDINATION

A. Coordinate connection to water main with utility company.

PART 2 - PRODUCTS

2.1 MANUFACTURERS

A. In other Part 2 articles where titles below introduce lists, the following requirements apply to product selection:

1. Available Manufacturers: Subject to compliance with requirements, manufacturers offering products that may be incorporated into the Work include, but are not limited to, manufacturers specified.

2. Manufacturers: Subject to compliance with requirements, provide products by one of the manufacturers specified.

2.2 PIPE AND FITTINGS

A. PVC, Schedule 40 (NPS 1/8 to NPS 3 ½): ASTM D 1785. Suitable for potable water distribution and manufactured in compliance with NSF Standards.

1. Fittings: PVC, Schedule 40 Socket Fittings: ASTM D 2466.

B. PVC, AWWA Pipe (NPS 4 to NPS 12): AWWA C900, Class 200 DR 14, with bell-and-spigot or double-bell ends.

1. PVC to PVC Fittings: Push-on-Joint, PVC Fittings, ASTM 3139, with elastomeric gasket bell ends, conforming to ASTM D2122 for bell measurements.

2. PVC to Metal Fittings, Valves, and Accessories: Mechanical-Joint, Ductile-Iron Fittings: AWWA C110, ductile- or gray-iron standard pattern or AWWA C153, ductile-iron compact pattern.

a. Glands and Gaskets: AWWA C111, ductile- or gray-iron glands, rubber gaskets, and steel bolts.

2.3 VALVES

A. AWWA, UL/FM Cast-Iron, Gate Valves:

1. Nonrising-Stem, Resilient-Seated Gate Valves: AWWA C509 and UL/F.M. approved, gray- or ductile-iron body and bonnet; with bronze or gray- or ductile-iron gate, resilient seats, bronze stem, and stem nut.

a. Minimum Working Pressure: 200 psig.
b. End Connections: Flanged, push-on rubber gasketed, or mechanical joint, as required.
c. Interior Coating: Complying with AWWA C550.

2.4 GATE VALVE ACCESSORIES AND SPECIALTIES

A. Valve Boxes: Comply with AWWA M44 for cast-iron valve boxes. Include top section, adjustable extension of length required for depth of burial of valve, plug with lettering "WATER," bottom section with base of size to fit over valve, and approximately five-inch diameter barrel. Fabricate valve box cover to fit snugly to prevent displacement by traffic.

1. Operating Wrenches: Steel tee-handle with one pointed end, stem of length to operate deepest buried valve, and socket matching valve operating nut.

B. Vertical-Type Indicator Posts: UL 789, FM-approved, cast-iron body with operating wrench, extension rod, and adjustable cast-iron barrel of length required for depth of burial of valve with tamperproof electrical supervisory switch for connection to the fire alarm control panel system.

2.5 VALVE APPLICATION

A. General Application: Use mechanical-joint-end valves for NPS 3 and larger underground installation. Use threaded- or flanged-end valves for installation in vaults. Use UL/FM, nonrising-stem gate valves for installation with indicator posts. Use corporation valves and curb valves with ends compatible with piping, for NPS 2 and smaller installation.

1. Where specific valve types are not indicated, the following requirements apply:

a. Underground Valves, NPS 3 and Larger: AWWA, cast-iron, nonrising-stem, resilient-seated, gate valves with valve box.
b. Underground Valves, NPS 4 and Larger, for Vertical-Type Indicator Posts: UL/FM, Cast-iron, nonrising-stem gate valves with indicator post.

2.6 WATER METERS

A. Water meter(s) indicated on drawings shall be installed by the local water purveyor for the area, unless noted otherwise.

2.7 BACKFLOW-PREVENTION DEVICES

A. General: FM Approved, AWWA, UL Classified, Approved by the Foundation for Cross Connection Control and Hydraulic Research at the University of Southern California.

1. Working Pressure: 175 psi minimum, unless otherwise indicated.
2. Interior Components: Corrosion-resistant materials.
3. Exterior Components: Assembly shall be provided with flanged connections, galvanized cast-iron or epoxy coated construction.

B. Reduced-Pressure-Principle Backflow Preventers: Suitable for continuous pressure application. Include outside screw and yoke gate valves on inlet and outlet, and strainer on inlet; test cocks; and pressure-differential relief valve with ASME A112.1.2, air-gap fitting located between two positive-seating check valves. Include tamperproof electrical supervisory switch for connection to tie the fire alarm control panel system.

2.8 FIRE HYDRANTS

A. Before procurement, verify approval has been issued by the Fire Department having jurisdiction.

B. Wet-Barrel Fire Hydrants: AWWA C503 or UL 312, one NPS 4 and two NPS 2-1/2 outlets, NPS 6 threaded or flanged inlet, and base section with NPS 6 mechanical-joint inlet. Include interior coating according to AWWA C550. Hydrant shall have 150-psig minimum working-pressure design.

1. Outlet Threads: NFPA 1963, with external hose thread used by local fire department. Include cast-iron caps with steel chains.

2. Operating and Cap Nuts: Pentagon, one and one-half inches point to flat.
3. Direction of Opening: Open hydrant valves by turning operating nut to left or counterclockwise.

C. Combined length of bury and extension shall be as indicated. Where not indicated, install top of hydrant flange three inches above finished surface.

D. Exterior Finish: "O.S.H.A. safety yellow" Ameritone 719 or approved equal after receiving a prime coat.

E. Break-Away Spools: Ductile iron break-away spools shall be provided for each hydrant installation. Each spool shall have a scored groove placed circumferentially around the spool near the hydrant end of the spool. The score shall be placed above-grade. Only one score shall be made in the hydrant break-away spool piece. Spool flanges shall be a 6-hole pattern to match both hydrant and bury.

F. Break-Away Bolts: Cadmium plated Type 317 stainless steel breakaway bolts shall be used to join the break-away spool section to the hydrant top section.

2.9 FIRE DEPARTMENT CONNECTIONS

A. Exposed, Freestanding, Fire Department Connections: UL 405, cast-bronze body, with thread inlets according to NFPA 1963 and matching local fire department hose threads and threaded bottom outlet. Include lugged caps, gaskets, and chains; lugged swivel connection and drop clapper for each hose-connection inlet; 18-inch high brass sleeve; and round escutcheon plate, and all appropriate check valves per NFPA 24.

1. Escutcheon Plate Marking: "[AUTO SPKR]."

PART 3 - EXECUTION

3.1 INSPECTION

A. Examination: Examine substrates, adjoining construction and conditions under which Work is to be installed. Do not proceed with Work until unsatisfactory conditions have been corrected

3.2 PREPARATION

A. Field Measurements: Verify dimensions before proceeding with Work. Obtain field measurements for work required to be accurately fitted to other construction. Be responsible for accuracy of such measurements and precise fitting and assembly of finished work.

3.3 JOINT CONSTRUCTION

A. Make pipe joints according to the following:

1. Ductile-Iron Piping, Gasketed Joints for Water-Service Piping: AWWA C600 and AWWA M41.
2. Ductile-Iron Piping, Gasketed Joints for Fire-Service-Main Piping: UL 194.
3. Copper Tubing Soldered Joints: ASTM B 828. Use flushable flux and lead-free solder.
4. PVC Piping Gasketed Joints: Use joining materials according to AWWA C900. Construct joints with elastomeric seals and lubricant according to ASTM D 2774 or ASTM D 3139 and pipe manufacturer's written instructions.
5. Dissimilar Materials Piping Joints: Use adapters compatible with both piping materials, with OD, and with system working pressure.

3.4 PIPING INSTALLATION

A. Project site water lines shall terminate approximately five feet from buildings, unless otherwise indicated on Drawings. Install temporary cap or plug terminals for future connection to building.

B. Bury piping with depth of cover over top at least 36 inches, unless otherwise indicated.

C. Comply with NFPA 24 for fire-service-main piping materials and installation.

D. Install ductile-iron, water-service piping according to AWWA C600 and AWWA M41.

E. Install copper tube and fittings according to CDA's "Copper Tube Handbook."

F. Install PVC, AWWA pipe according to AWWA M23 and ASTM F 645.

G. Install underground piping with restrained joints at horizontal and vertical changes in direction. Use restrained-joint piping, thrust blocks, anchors, tie-rods and clamps, and other supports for all lines NPS 3 or greater.

H. Water Main Connection: Arrange and pay for tap in the water main, water meter, and all associated fees from the water purveyor.

3.5 CLEARANCE OF WATER LINE

A. Building or Structure: Two feet minimum horizontal separation.

B. Sewer crossing:

1. Typical Conditions: Lay water mains over sanitary sewers to provide vertical separation minimum three feet.
2. Unusual Conditions: If above separation cannot be met, for sewers less than three feet below the water pipe, use the following:

    a. Install water line with all joints located at least four feet from each side of the sewer pipe.
    b. Sewer pipe encased in six inches concrete around pipe and extend four feet either side of water main.

C. Parallel to Sewer Line: Water line shall not be installed in a common trench with the building sanitary sewer unless both of the following requirements are met:

1. The bottom of the water pipe, at all points, shall be at least 12 inches above the top of the sewer.
2. The water pipe shall be placed on a solid shelf excavated at one side of the common trench with a minimum clear horizontal distance of at least 12 inches from the sewer.

3.6 ANCHORAGE INSTALLATION

A. Install anchorages for tees, plugs and caps, bends, crosses, valves, and hydrant branches for all lines NPS 3 or greater. Include anchorages for the following piping systems:

1. Gasketed-Joint, Ductile-Iron, Water-Service Piping: According to AWWA C600.
2. Gasketed-Joint, PVC Water-Service Piping: According to AWWA M23.
3. Fire-Service-Main Piping: According to NFPA 24.

3.7 VALVE INSTALLATION

A. Gate Valves: Comply with AWWA C600 and AWWA M44. Install each underground valve with stem pointing up and with valve box.

B. Vertical-Type Indicator Post Gate Valves: Comply with NFPA 24. Install each underground valve and valves in vaults with stem pointing up and with vertical cast-iron indicator post. Include tamperproof electrical supervisory switch for connection to tie the fire alarm control panel system.

3.8 BACKFLOW-PREVENTER INSTALLATION

A. Install backflow preventers of type, size, and capacity indicated. Include valves and test cocks. Install according to requirements of plumbing and health department and authorities having jurisdiction.

B. Do not install backflow preventers with relief drain in vault or other space subject to flooding.

C. Do not install bypass piping around backflow preventers.

D. Support three-inch and larger backflow preventers, valves, and piping near floor and on brick or concrete piers.

E. Access and clearance shall be provided for the required testing, maintenance and repair. Access and clearance shall require a minimum of one foot between the lowest portion of the assembly and grade or platform.

F. Include tamperproof electrical supervisory switch for connection to tie the fire alarm control panel system.

3.9 FIRE HYDRANT INSTALLATION

A. General: Install each fire hydrant with separate gate valve in supply pipe, anchor with restrained joints or thrust blocks, and support in upright position.

B. UL/FM-Type Fire Hydrants: Comply with NFPA 24.

3.10 FIRE DEPARTMENT CONNECTION INSTALLATION

A. Install fire department connections of types and features indicated.

B. Install ball drip valves at each check valve for fire department connection to mains.

3.11 IDENTIFICATION

A. Install continuous underground detectable warning tape during backfilling of trench for underground water-service piping. Locate below finished grade, directly over piping. Refer to Division 31 Section "Earth Moving" for tape specifications.

3.12 FIELD QUALITY CONTROL

A. Piping Tests: Conduct piping tests before joints are covered, and after thrust blocks have hardened sufficiently. The trench has been backfilled between the joints before testing to prevent movement of pipe. Use only potable water.

B. Hydrostatic Tests: Test procedure shall be in accordance with SSPWC Section 306-8.9.2.4.

1. Domestic Water: The piping shall be subjected for a minimum of 4 hours to a pressure of 50 psi in excess of the working pressure shown on the plans for the class of pipe constructed, but in no case less than 150 psi. Examine all exposed pipes, joints, fittings and accessories during the test period. Replace or repair defective portions of the system and repeat tests until results are satisfactory. The allowable leakage for PVC or Ductile Iron Pipe shall be in accordance with SSPWC Table 306-8.9.2.3. For Welded Steel Pipe and HDPE no leakage will be permitted.

2. Fire Water: All piping and attached appurtenances subjected to system working pressure shall be hydrostatically tested at 200 psi or 50 psi in excess of the system working pressure, whichever is greater, and shall maintain that pressure at ±5 psi for 4 hours. Successful test results shall be determined by indication of pressure lost less than gauge pressure of 5 psi and by no visual leakage. Examine all exposed pipe, joints, fittings and accessories during the test period. Replace or repair defective portions of the system, and repeat tests until results are satisfactory. The test pressure shall be read from one of the following, located at the lowest elevation of the system or the portion of the system being tested: (1) A gauge located at one of the hydrant outlets, (2) A gauge located at the lowest point where no hydrants are provided.

3. Other Means of Hydrostatic Tests: Hydrostatic tests shall be in accordance with the guidelines provided in AWWA C600 (Ductile-Iron Water Mains), AWWA M9 (Concrete Pressure pipe), or AWWA M23 (PVC), or AWWA M55 (PE), as long as test duration requirement of 4 hours is employed.

C. Prepare reports on testing activities.

3.13 CLEANING

A. Clean and disinfect water-distribution piping as follows:

1. Purge new water-distribution piping systems and parts of existing systems that have been altered, extended, or repaired before use.
2. Use purging and disinfecting procedure prescribed by authorities having jurisdiction or, if method is not prescribed by authorities having jurisdiction, use procedure described in AWWA C651 or as described below:

   a. After flushing, piping for potable water service shall be disinfected with a chlorine compound solution made with liquid chlorine, calcium hypochlorite in solution, or a sodium hypochlorite solution which shall be water mixed and introduced into the mains to produce a dosage of not less than 50 mg/l nor more than 100 mg/l in all sections of the pipe and appurtenances.
   b. Treated water shall be retained with the system for at least 24 hours and shall, at the end of the retention period, produce a chlorine residual of not less than 25 mg/l.
   c. During the disinfection process, valves, hydrants, and other accessories shall be operated.
   d. After chlorination, the contractor shall flush water from pipe at its extremities until replacement water tests equal chemically and bacteriologically to those of the permanent source of water supply.
   e. Submit water samples in sterile bottles to authorities having jurisdiction. Repeat procedure if biological examination shows evidence of contamination.
   f. Placing of HTH capsules or powder in pipe sections during the laying process will not be considered adequate disinfection.
   g. If tests are not satisfactory, the contractor shall provide additional disinfection as required until all test are passed.
   h. After final flushing, the contractor shall plug flushing fittings with devices intended for this purpose at the pressure class of the pipe.

B. Prepare reports on purging and disinfecting activities.

C. END OF SECTION 33 11 00

SECTION 33 31 00 – SANITARY SEWERAGE PIPING

PART 1 - GENERAL

1.1 SUMMARY

A. This Section includes gravity-flow, nonpressure sanitary sewerage outside the building, with the following components:

1. Cleanouts.
2. Precast concrete manholes.

1.2 PERFORMANCE REQUIREMENTS

A. Gravity-Flow, Nonpressure, Drainage-Piping Pressure Rating: 8-foot head of water (3.5 psi).

1.3 SUBMITTALS

A. Manufacturer's product data for pipe and fittings.

B. Field quality-control test reports.

PART 2 - PRODUCTS

2.1 MANUFACTURERS

A. In other Part 2 articles where titles below introduce lists, the following requirements apply to product selection:

1. Available Manufacturers: Subject to compliance with requirements, manufacturers offering products that may be incorporated into the Work include, but are not limited to, manufacturers specified.

2.2 PVC PIPE AND FITTINGS

A. PVC Sewer Pipe and Fittings, NPS 15 and Smaller: ASTM D 3034, SDR 35, with bell-and-spigot ends for gasketed joints with ASTM F 477, elastomeric seals.

2.3 NONPRESSURE-TYPE PIPE COUPLINGS

A. Comply with ASTM C 1173, elastomeric, sleeve-type, reducing or transition coupling, for joining underground nonpressure piping. Include ends of same sizes as piping to be joined and corrosion-resistant-metal tension band and tightening mechanism on each end.

B. Sleeve Materials:

1. For Cast-Iron Soil Pipes: ASTM C 564, rubber.
2. For Plastic Pipes: ASTM F 477, elastomeric seal or ASTM D 5926, PVC.
3. For Dissimilar Pipes: ASTM D 5926, PVC or other material compatible with pipe materials being joined.

C. Shielded, Flexible Couplings: ASTM C 1460, elastomeric or rubber sleeve with full-length, corrosion-resistant outer shield and corrosion-resistant-metal tension band and tightening mechanism on each end.

D. Ring-Type, Flexible Couplings: Elastomeric compression seal with dimensions to fit inside bell of larger pipe and for spigot of smaller pipe to fit inside ring.

2.4 CLEANOUTS

A. Gray-Iron Cleanouts: ASME A112.36.2M, round, gray-iron housing with clamping device and round, secured, scoriated, gray-iron cover. Include gray-iron ferrule with inside calk or spigot connection and countersunk, tapered-thread, brass closure plug.

1. Top-Loading Classification: Heavy duty.
2. Sewer Pipe Fitting and Riser to Cleanout: ASTM A 74, Service class, cast-iron soil pipe and fittings.

B. PVC Cleanouts: PVC body with PVC threaded plug. Include PVC sewer pipe fitting and riser to cleanout of same material as sewer piping.

2.5 CONCRETE

A. General: Cast-in-place concrete according to ACI 318/318R, ACI 350R, and the following:

1. Cement: ASTM C 150, Type II.
2. Fine Aggregate: ASTM C 33, sand.
3. Coarse Aggregate: ASTM C 33, crushed gravel.
4. Water: Potable.

B. Portland Cement Design Mix: 3,250 pounds per square inch (psi) minimum, with 0.45 maximum water/cementitious materials ratio.

1. Reinforcement Fabric: ASTM A 185, steel, welded wire fabric, plain.
2. Reinforcement Bars: ASTM A 615/A 615M, Grade 60, deformed steel.

C. Ballast and Pipe Supports: Portland cement design mix, 3,250 pounds per square inch (psi) minimum, with 0.45 maximum water/cementitious materials ratio.

1. Reinforcement Fabric: ASTM A 185, steel, welded wire fabric, plain.
2. Reinforcement Bars: ASTM A 615/A 615M, Grade 60, deformed steel.

PART 3 - EXECUTION

3.1 PIPING APPLICATIONS

A. Pipe couplings and fittings with pressure ratings at least equal to piping rating may be used in applications below, unless otherwise indicated.

1. Use nonpressure-type flexible couplings where required to join gravity-flow, nonpressure sewer piping, unless otherwise indicated.

a. Shielded flexible couplings for same or minor difference OD pipes.
b. Unshielded, increaser/reducer-pattern, flexible couplings for pipes with different OD.
c. Ring-type flexible couplings for piping of different sizes where annular space between smaller piping's OD and larger piping's ID permits installation.

B. Install piping beginning at low point, true to grades and alignment indicated with unbroken continuity of invert. Place bell ends of piping facing upstream. Install gaskets, seals, sleeves, and couplings according to manufacturer's written instructions for using lubricants, cements, and other installation requirements.

C. Install manholes for changes in direction if shown on plan, otherwise use fittings. Use fittings for branch connections, unless direct tap into existing sewer is indicated.

D. Install proper size increasers, reducers, and couplings where different sizes or materials of pipes and fittings are connected. Reducing size of piping in direction of flow is prohibited.

E. Install gravity-flow, nonpressure, drainage piping according to the following:

1. Install piping pitched down in direction of flow, at minimum slope of one percent, unless otherwise indicated.
2. Install hub-and-spigot, cast-iron soil piping according to CISPI's "Cast Iron Soil Pipe and Fittings Handbook."
3. Install PVC sewer piping according to ASTM D 2321 and ASTM F 1668.

F. Clear interior of piping and manholes of dirt and superfluous material as work progresses. Maintain swab or drag in piping, and pull past each joint as it is completed. Place plug in end of incomplete piping at end of day and when work stops.

3.2 PIPE JOINT CONSTRUCTION

A. Join gravity-flow, nonpressure, drainage piping according to the following:

1. Join hub-and-spigot, cast-iron soil piping with gasket joints according to CISPI's "Cast Iron Soil Pipe and Fittings Handbook" for compression joints.
2. Join hub-and-spigot, cast-iron soil piping with calked joints according to CISPI's "Cast Iron Soil Pipe and Fittings Handbook" for lead and oakum calked joints.
3. Join ductile-iron, gravity sewer piping according to AWWA C600 for push-on joints.
4. Join PVC sewer piping according to ASTM D 2321 and ASTM D 3034 for elastomeric-gasket joints.
5. Join dissimilar pipe materials with nonpressure-type, flexible couplings.

3.3 CONNECTIONS

A. Connect nonpressure, gravity-flow drainage piping to building's sanitary building drains specified in Division 15 Section "Sanitary Waste and Vent Piping."

B. Make connections to existing piping and underground manholes.

1. Use commercially manufactured wye fittings for piping branch connections. Remove section of existing pipe; install wye fitting into existing piping; and encase entire wye fitting, plus six-inch overlap, with not less than six inches of concrete with 28-day compressive strength of 3,250 pounds per square inch (psi).

3.4 FIELD QUALITY CONTROL

A. Test new piping systems, and parts of existing systems that have been altered, extended, or repaired, for leaks and defects.

1. Do not enclose, cover, or put into service before inspection and approval.
2. Clean the pipe and remove debris and sediments before starting testing.
3. Test completed piping systems according to requirements of authorities having jurisdiction.
4. Schedule tests and inspections by authorities having jurisdiction with at least 24 hours advance notice.
5. Replace leaking pipes that failed the test and repeat the test until a satisfactory pass is achieved.
6. Submit separate reports for each test.

B. Hydrostatic Tests: Test sanitary sewer according to requirements of authorities having jurisdiction, or the following procedures for Concrete, PVC, HDPE, ABS, DI, and CI pipes:

a. Close openings in system and fill with water.
b. Purge air and refill with water.
c. Allow water level to stabilize for a minimum of 1 hour before starting the test, add water as needed.

d. Minimum head: At least 2 feet above the crown (top) of the highest section of the pipe in the line under test.
e. Disconnect water supply.
f. Test and inspect joints for leaks.
g. Acceptable leakage shall not exceed 50 gallons/inch of nominal pipe size per mile of pipe, during 24-hour period. The test period must be at least 1 hour in duration.

C. Air Tests: Test sanitary sewer according to requirements of authorities having jurisdiction or the following procedures for Concrete, PVC, HDPE, ABS, DI, and CI pipes:

a. Do not use low-pressure air test for pipes over 30” in diameter regardless of pipe material.
b. Perform the test immediately following pipe cleaning.
c. Use pneumatic or mechanical test plugs designed specifically for pipeline testing to prevent release of air during low-pressure air test.
d. Start the test after the pressure is stabilized at or above an internal pressure of 3.5 psi.
e. Start recording the time when the internal pressure drops to 3.5 psi. The tested portion of the pipe passes the test when the pressure drop is than 1 psi for the time calculated for the size and length of the pipe to be tested as shown in the following table:

Minimum Test Time for Pressure Drop

Nominal pipe diameter (in)	Time for pressure drop (minutes/100 ft)
6	0.7
8	1.2
10	1.5
12	1.8
15	2.1
18	2.4
21	3.0
24	3.6
27	4.2
30	4.8

END OF SECTION 33 31 00

SECTION 33 41 00 – STORM UTILITY DRAINAGE PIPING

PART 1 - GENERAL

1.1 SUMMARY

A. This Section includes gravity-flow, nonpressure storm drainage pipe and drainage structures outside the building.

1.2 PERFORMANCE REQUIREMENTS

A. Gravity-Flow, Nonpressure, Drainage-Piping Pressure Rating: 8-foot head of water (3.5 psi).

1.3 SUBMITTALS

A. Product Data: For each type of product installed.

B. Field quality-control test reports.

PART 2 - PRODUCTS

2.1 MANUFACTURERS

A. In other Part 2 articles where titles below introduce lists, the following requirements apply to product selection:

1. Available Manufacturers: Subject to compliance with requirements, manufacturers offering products that may be incorporated into the Work include but are not limited to, manufacturers specified.

2.2 PVC PIPE AND FITTINGS

A. PVC Sewer Pipe and Fittings, NPS 15 and Smaller: ASTM D 3034, SDR 35, with bell-and-spigot ends for gasketed joints with ASTM F 477, elastomeric seals.

B. PVC Sewer Pipe and Fittings, NPS 18 and Larger: ASTM F 679, T-1 wall thickness, with bell-and-spigot ends for gasketed joints with ASTM F 477, elastomeric seals.

2.3 NONPRESSURE-TYPE PIPE COUPLINGS

A. Comply with ASTM C 1173, elastomeric, sleeve-type, reducing or transition coupling, for joining underground nonpressure piping. Include ends of same sizes as piping to be joined and corrosion-resistant-metal tension band and tightening mechanism on each end.

B. Sleeve Materials:

1. For Cast-Iron Soil Pipes: ASTM C 564, rubber.
2. For Plastic Pipes: ASTM F 477, elastomeric seal or ASTM D 5926, PVC.
3. For Dissimilar Pipes: ASTM D 5926, PVC or other material compatible with pipe materials being joined.

C. Shielded Flexible Couplings: ASTM C 1460, elastomeric or rubber sleeve with full-length, corrosion-resistant outer shield and corrosion-resistant-metal tension band and tightening mechanism on each end.

D. Ring-Type Flexible Couplings: Elastomeric compression seal with dimensions to fit inside bell of larger pipe and for spigot of smaller pipe to fit inside ring.

2.4 CLEANOUTS

A. PVC Cleanouts: PVC body with PVC threaded plug. Include PVC sewer pipe fitting and riser to cleanout of same material as sewer piping.

2.5 MANHOLES

A. Standard Precast Concrete Manholes: ASTM C 478, precast, reinforced concrete, of depth indicated, with provision for sealant joints.

1. Diameter: Forty-eight inches minimum, unless otherwise indicated.
2. Ballast: Increase thickness of precast concrete sections or add concrete to base section, as required to prevent flotation.
3. Base Section: Six-inch minimum thickness for floor slab and four-inch minimum thickness for walls and base riser section and having separate base slab or base section with integral floor.
4. Riser Sections: Four-inch minimum thickness, and of length to provide depth indicated.
5. Top Section: Eccentric-cone type unless concentric-cone or flat-slab-top type is indicated. Top of cone of size that matches grade rings.
6. Joint Sealant: ASTM C 990 bitumen or butyl rubber.
7. Resilient Pipe Connectors: ASTM C 923, cast or fitted into manhole walls, for each pipe connection.
8. Steps: Individual FRP steps, FRP ladder, or ASTM A 615/A 615M, deformed, one-half-inch steel reinforcing rods encased in ASTM D 4101, PP wide enough to allow workers to place both feet on one step and designed to prevent lateral slippage off of step. Cast or anchor steps into sidewalls at 12- to 16-inch intervals. Omit steps if total depth from floor of manhole to finished grade is less than 60 inches.

9. Adjusting Rings: Interlocking rings with level or sloped edge in thickness and diameter matching manhole frame and cover. Include sealant recommended by ring manufacturer.
10. Grade Rings: Reinforced-concrete rings, six- to nine-inch total thickness, to match diameter of manhole frame and cover.
11. Manhole Frames and Covers: Ferrous; 24-inch ID by seven- to nine-inch riser with four-inch-minimum width flange and 26-inch-diameter cover. Include indented top design with lettering cast into cover, using wording "STORM DRAIN."

    a. Material: ASTM A 536, Grade 60-40-18 ductile iron or ASTM A 48, Class 35 gray iron, unless otherwise indicated.

2.6 CONCRETE

A. General: Cast-in-place concrete according to ACI 318/318R, ACI 350R, and the following:

1. Cement: ASTM C 150, Type II.
2. Fine Aggregate: ASTM C 33, sand.
3. Coarse Aggregate: ASTM C 33, crushed gravel.
4. Water: Potable.
5. Ballast and Pipe Supports: Portland cement design mix, 3,000 pounds per square inch (psi) minimum, with 0.58 maximum water-cementitious materials ratio.

    a. Reinforcement Fabric: ASTM A 185, steel, welded wire fabric, plain.
    b. Reinforcement Bars: ASTM A 615/A 615M, Grade 60, deformed steel.

2.7 CATCH BASINS

A. Standard Precast Concrete Catch Basins: ASTM C 478, precast, reinforced concrete, of depth indicated, with provision for sealant joints.

1. Base Section: Six-inch minimum thickness for floor slab and four-inch minimum thickness for walls and base riser section and having separate base slab or base section with integral floor.
2. Top Section: Eccentric-cone type unless flat-slab-top type is indicated.
3. Joint Sealant: ASTM C 990, bitumen or butyl rubber.

B. Frames and Grates: ASTM A 536, Grade 60-40-18, ductile iron designed for A-16 (heavy traffic) structural loading unless otherwise indicated. Include 24-inch ID by seven- to nine-inch riser with four-inch minimum width flange, and 26-inch-diameter flat grate with small square or short-slotted drainage openings.

1. Grate Free Area: Approximately 50 percent, unless otherwise indicated.

PART 3 - EXECUTION

3.1 PIPING APPLICATIONS

A. Pipe couplings and fittings with pressure ratings at least equal to piping rating may be used in applications below, unless otherwise indicated.

1. Use nonpressure-type flexible couplings where required to join gravity-flow, nonpressure sewer piping, unless otherwise indicated.

a. Shielded flexible couplings for same or minor difference OD pipes.
b. Ring-type flexible couplings for piping of different sizes where annular space between smaller piping's OD and larger piping's ID permits installation.

3.2 PIPING INSTALLATION

A. Install piping beginning at low point, true to grades and alignment indicated with unbroken continuity of invert. Place bell ends of piping facing upstream. Install gaskets, seals, sleeves, and couplings according to manufacturer's written instructions for using lubricants, cement, and other installation requirements.

B. Install manholes for changes in direction if shown on plan, otherwise use fittings. Use fittings for branch connections unless direct tap into existing storm drain is indicated.

C. Install proper size increasers, reducers, and couplings where different sizes or materials of pipes and fittings are connected. Reducing size of piping in direction of flow is prohibited.

D. Install gravity-flow, nonpressure drainage piping according to the following:

1. Install piping pitched down in direction of flow, at minimum slope of one percent, unless otherwise indicated.
2. Install hub-and-spigot, cast-iron soil piping according to CISPI's "Cast Iron Soil Pipe and Fittings Handbook."
3. Install PVC sewer piping according to ASTM D 2321 and ASTM F 1668.

E. Clear interior of piping and manholes of dirt and superfluous material as work progresses.

3.3 PIPE JOINT CONSTRUCTION

A. Join gravity-flow, nonpressure drainage piping according to the following:

1. Join hub-and-spigot, cast-iron soil piping with gasket joints according to CISPI's "Cast Iron Soil Pipe and Fittings Handbook" for compression joints.
2. Join hub-and-spigot, cast-iron soil piping with calked joints according to CISPI's "Cast Iron Soil Pipe and Fittings Handbook" for lead and oakum calked joints.
3. Join PVC sewer piping according to ASTM D 2321 and ASTM D 3034 for elastomeric-gasket joints.

4. Join dissimilar pipe materials with nonpressure-type flexible couplings.

3.4 MANHOLE INSTALLATION

A. General: Install manholes, complete with appurtenances and accessories indicated.

B. Install precast concrete manhole sections with sealants according to ASTM C 891.

C. Set tops of frames and covers flush with finished surface of manholes that occur in pavements. Set tops three inches above finished surface elsewhere, unless otherwise indicated.

3.5 CATCH BASIN INSTALLATION

A. Set frames and grates to elevations indicated.

3.6 CONNECTIONS

A. Connect nonpressure, gravity-flow drainage piping to building's storm building drains specified in Division 22 Section "Facility Storm Drainage Piping."

B. Make connections to existing piping and underground manholes.

1. Use commercially manufactured wye fittings for piping branch connections. Remove section of existing pipe; install wye fitting into existing piping; and encase entire wye fitting, plus six-inch overlap, with not less than six inches of concrete with 28-day compressive strength of 3,250 pounds per square inch (psi).

3.7 FIELD QUALITY CONTROL

A. Test new piping systems, and parts of existing systems that have been altered, extended, or repaired, for leaks and defects.

1. Do not enclose, cover, or put into service before inspection and approval.
2. Clean the pipe and remove debris and sediments before starting testing.
3. Test completed piping systems according to requirements of authorities having jurisdiction.
4. Schedule tests and inspections by authorities having jurisdiction with at least 24 hours advance notice.
5. Replace leaking pipes that failed the test and repeat the test until a satisfactory pass is achieved.
6. Submit separate reports for each test.

B. Hydrostatic Tests: Test sanitary sewer according to requirements of authorities having jurisdiction or the following procedures for Concrete, PVC, HDPE, ABS, DI, and CI pipes:

a. Close openings in system and fill with water.
b. Purge air and refill with water.

c. Allow water level to stabilize for a minimum of 1 hour before starting the test, add water as needed.
d. Minimum head: At least 2 feet above the crown (top) of the highest section of the pipe in the line under test.
e. Disconnect water supply.
f. Test and inspect joints for leaks.
g. Acceptable leakage shall not exceed 50 gallons/inch of nominal pipe size per mile of pipe, during 24-hour period. The test period must be at least 1 hour in duration.

Minimum Test Time for Pressure Drop

Nominal pipe diameter (in)	Time for pressure drop (minutes/100 ft)
6	0.7
8	1.2
10	1.5
12	1.8
15	2.1
18	2.4
21	3.0
24	3.6
27	4.2
30	4.8

C. Air Tests: Test sanitary sewer according to requirements of authorities having jurisdiction or the following procedures for Concrete, PVC, HDPE, ABS, DI, and CI pipes:

a. Do not use low-pressure air test for pipes over 30” in diameter regardless of pipe material.
b. Perform the test immediately following pipe cleaning.
c. Use pneumatic or mechanical test plugs designed specifically for pipeline testing to prevent release of air during low-pressure air test.
d. Start the test after the pressure is stabilized at or above an internal pressure of 3.5 psi.
e. Start recording the time when the internal pressure drops to 3.5 psi. The tested portion of the pipe passes the test when the pressure drop is than 1 psi for the time calculated for the size and length of the pipe to be tested as shown in the following table:

END OF SECTION 33 41 00